ASSEMBLY INSTRUCTIONS

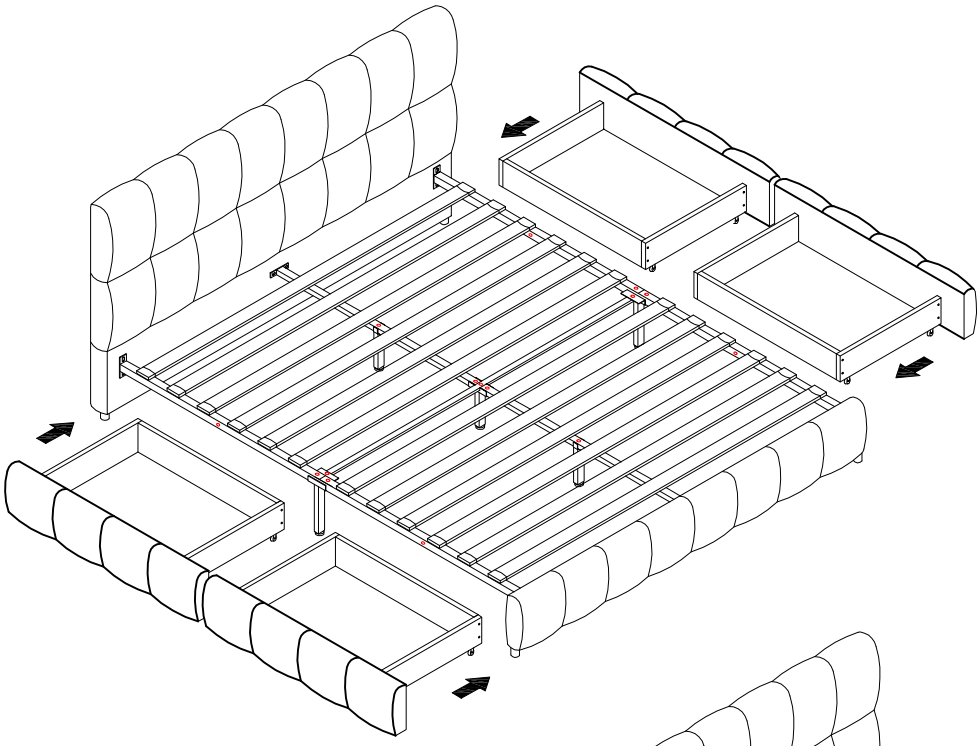

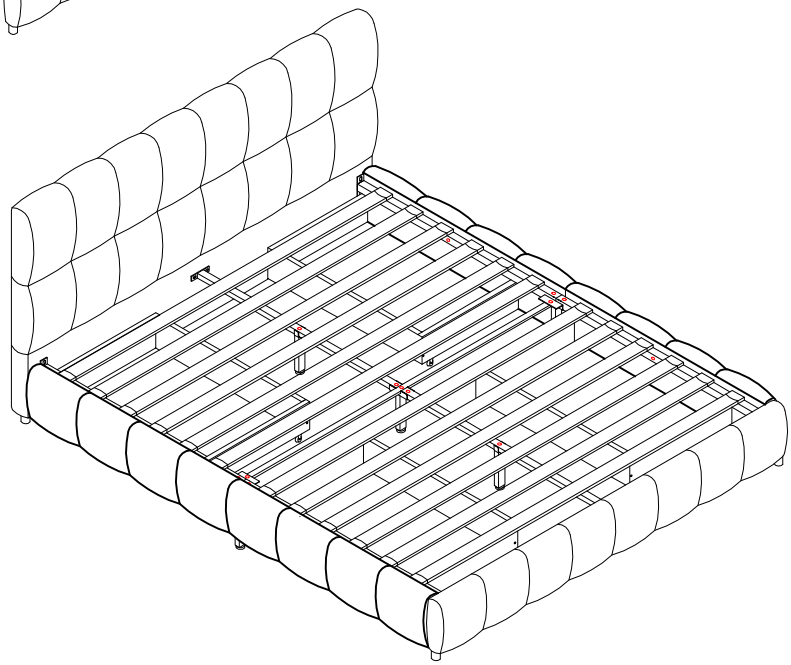

PARTS AND HARDWARE

1 Headboard 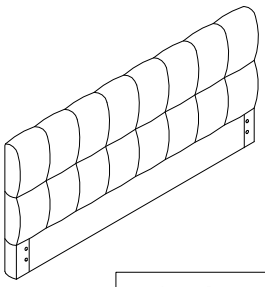 1PC	2 Footboard 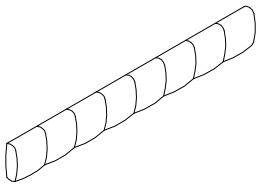 1PC	3 Side Rail Support 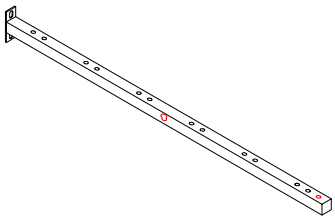 4PCS	4 Center support rail 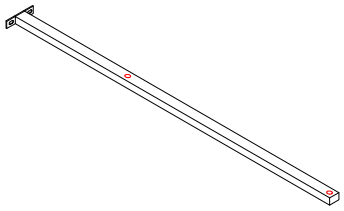 2PCS
5 Center cross bar 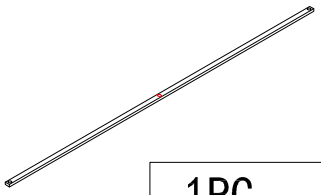 1PC	6 Side Rail Feet 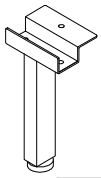 2PCS	7 Center Support Leg 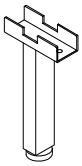 1PC	8 Support Leg 2PCS
9 Leg 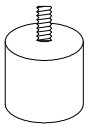 4PCS	10 Single Sided Plastic cap 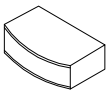 24PCS	11 Slat 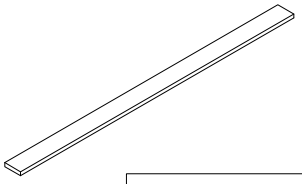 12PCS	12 16PCS
13 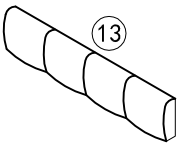 4PCS	14 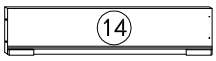 4PCS	15 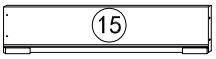 4PCS	16 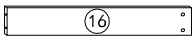 4PCS
17 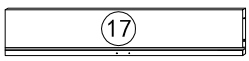 4PCS	18 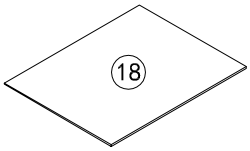 4PCS		

PARTS AND HARDWARE

HARDWARE LIST:

A 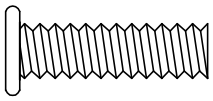 m8*30mm 14PCS	B 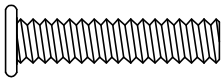 m8*45mm 9PCS	C 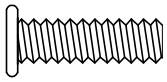 m6*25mm 4PCS	D m8 23PCS
E 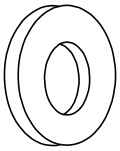 m8*19mm 23PCS	F m8 1PC	G 24PCS	H 24+2PCS
I 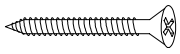 8*30mm 24PCS	J 8*15mm 64PCS	K 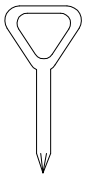 1PC	

STEP :Packing Details

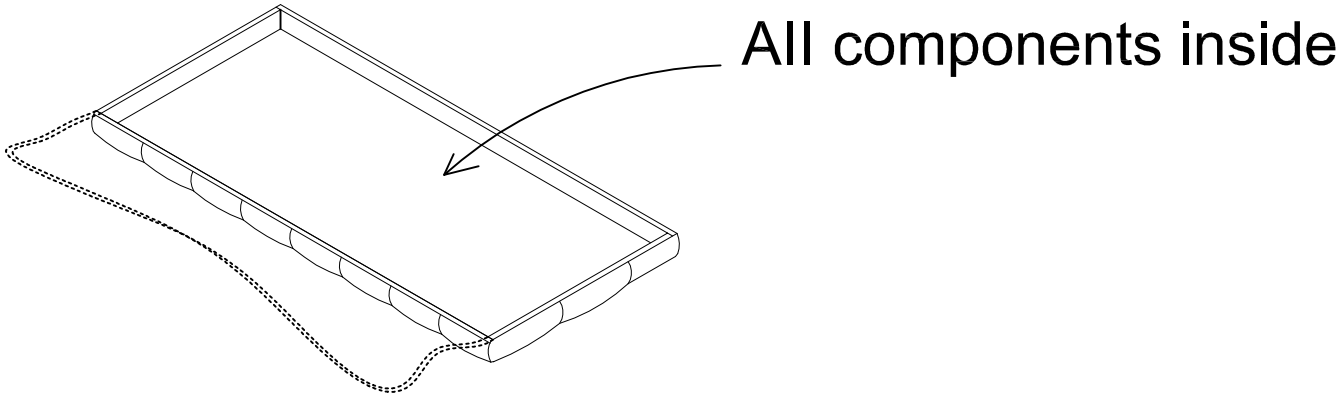

STEP 1

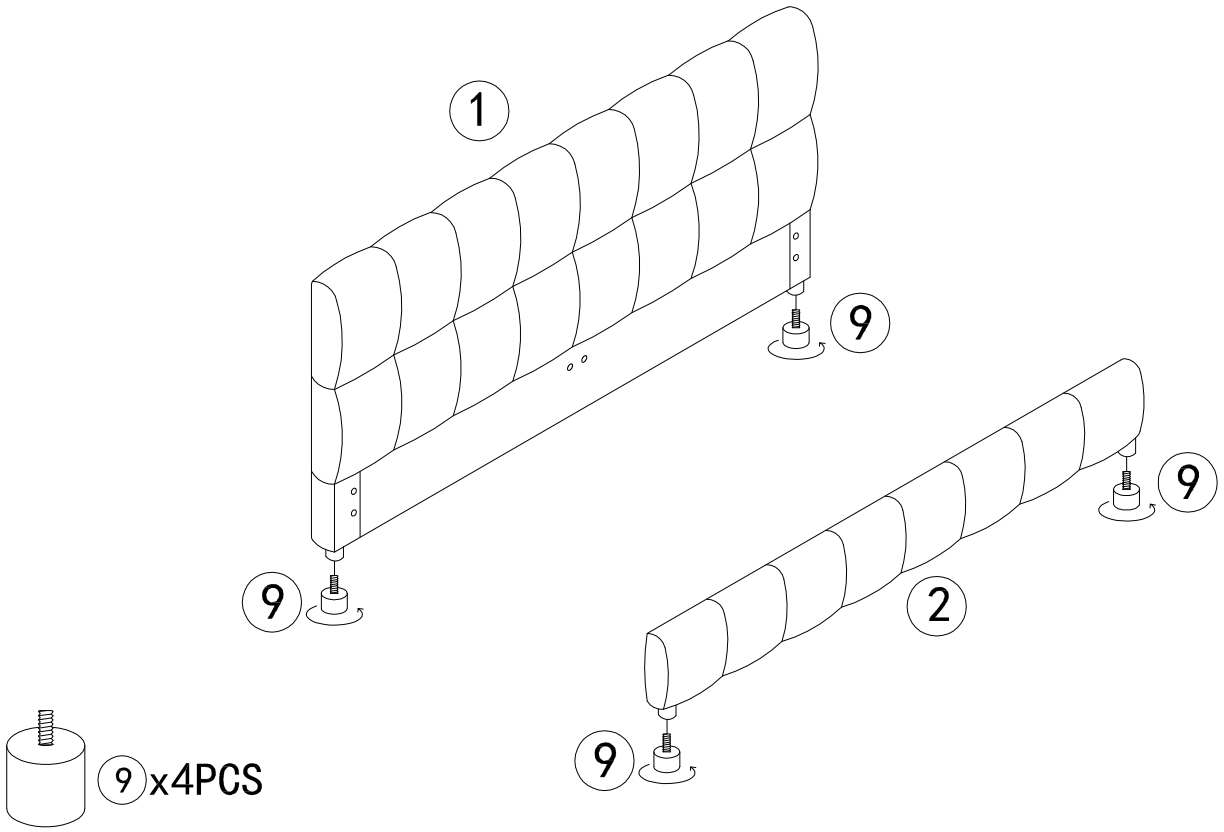

STEP 2

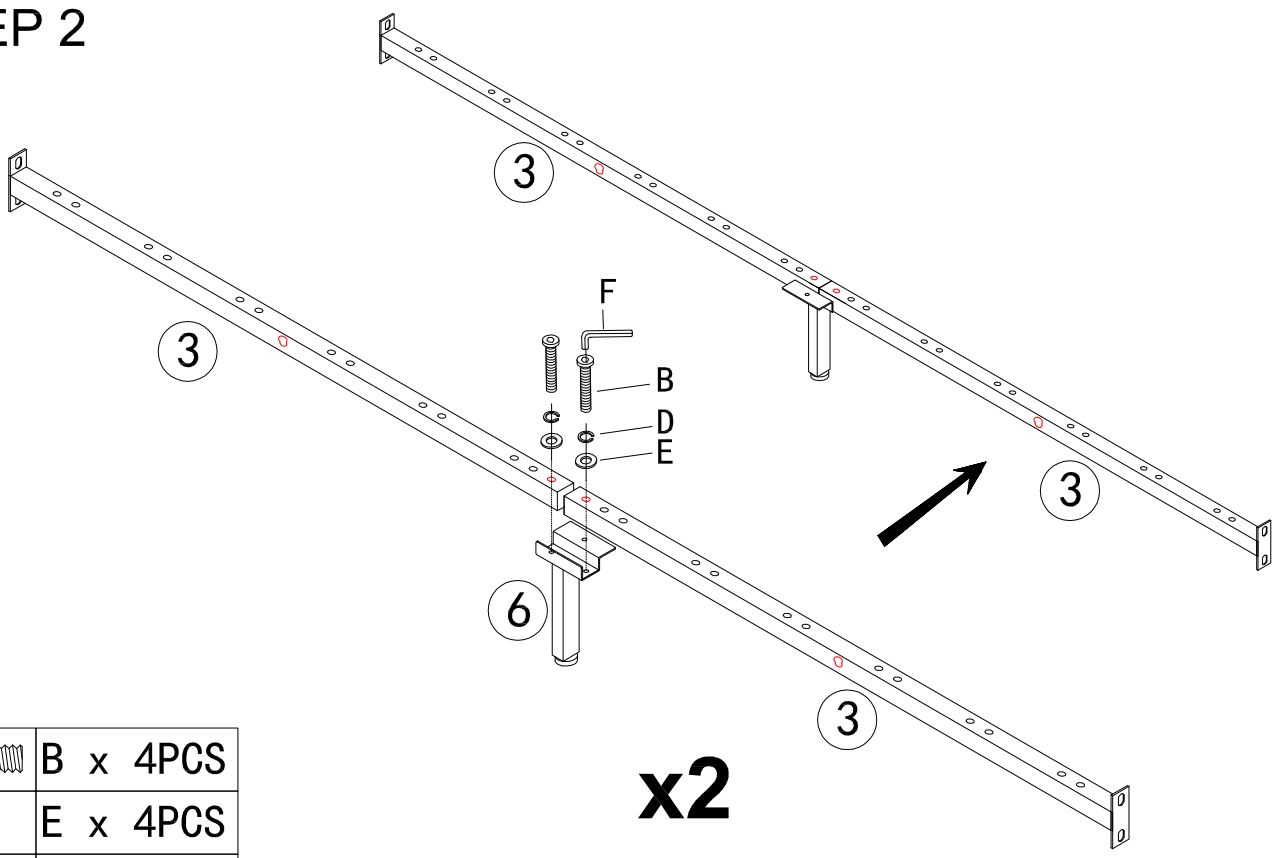

	B x 4PCS
	E x 4PCS
	D x 4PCS
	F x 1PC

STEP 4

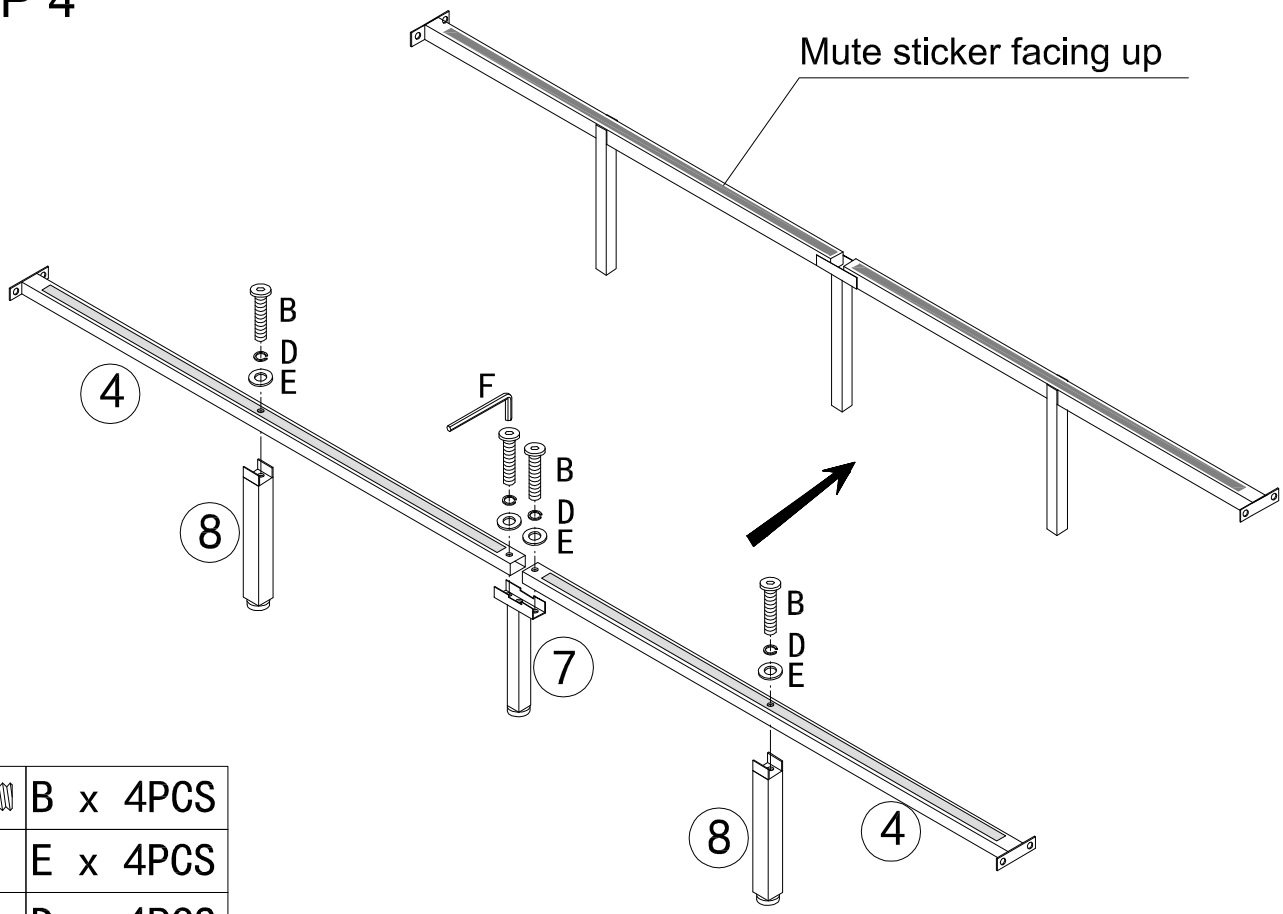

	B x 4PCS
	E x 4PCS
	D x 4PCS
	F x 1PC

STEP 5

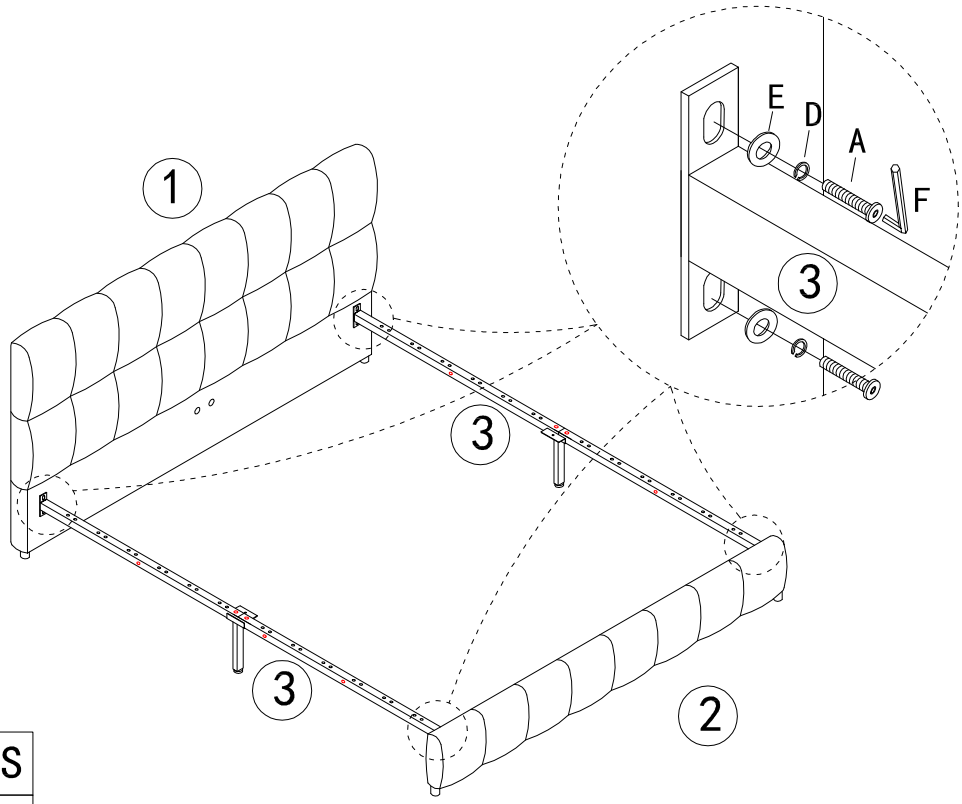

	A x 8PCS
	E x 8PCS
	D x 8PCS
	F x 1PC

STEP 5

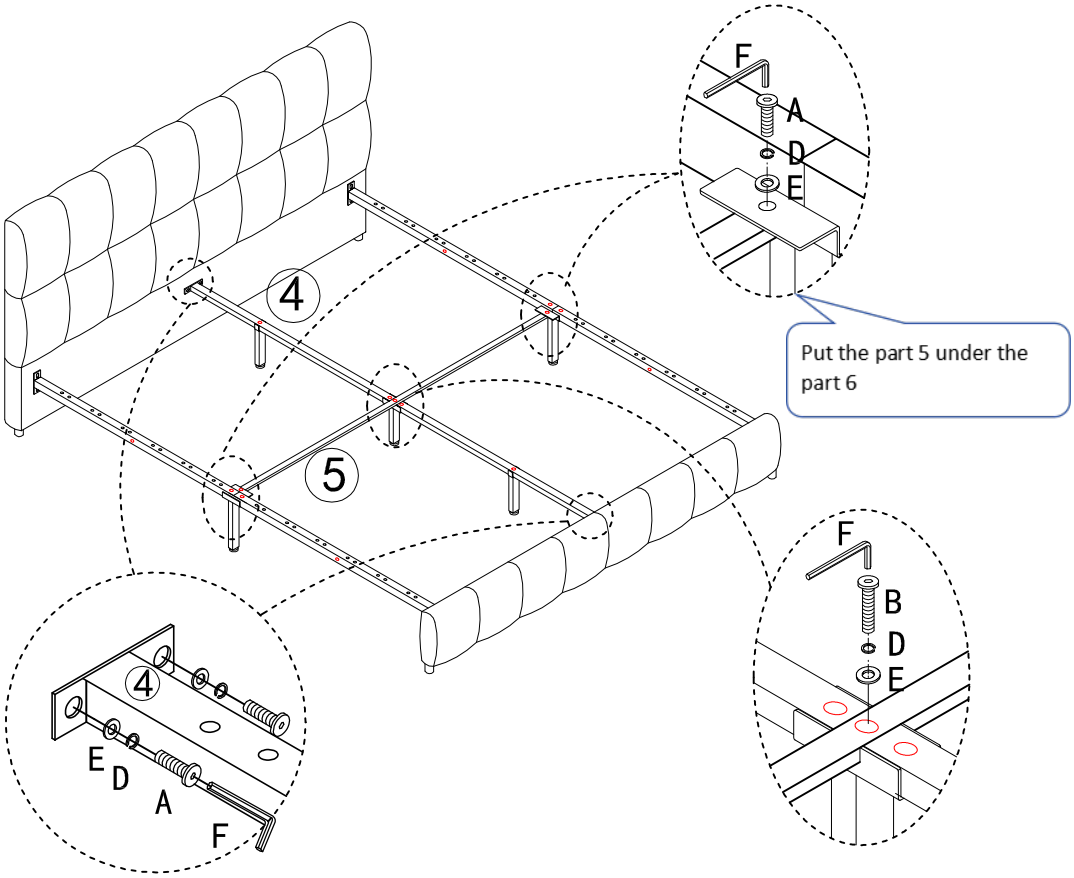

	B x 1PCS
	A x 6PCS
	E x 7PCS
	D x 7PCS
	F x 1PC

STEP 6

⑪ Slat	⑩ Single Sided Plastic cap
12PCS	24PCS

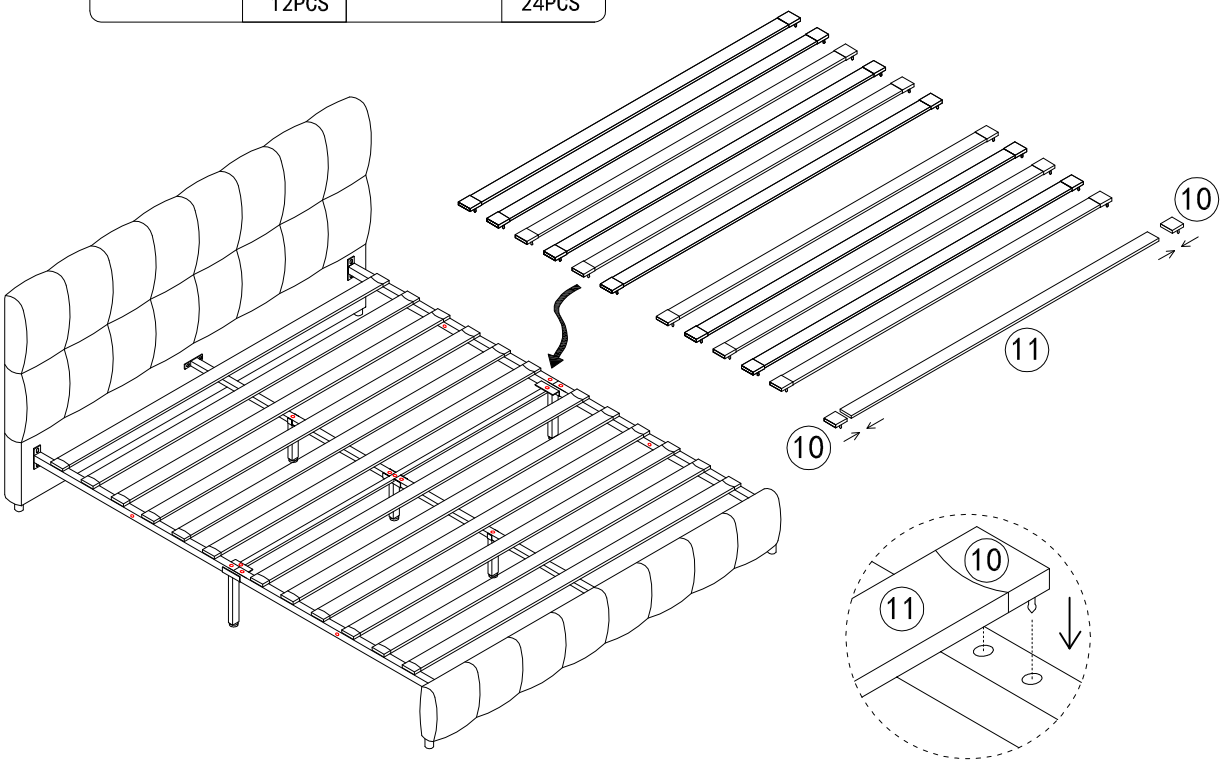

STEP 9

ASSEMBLY TOOLS REQUIRED (NOT INCLUDED)

Screwdriver

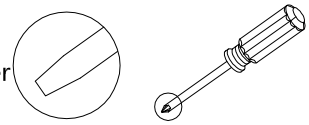

THIS IS HOW A CAM NUT WORKS...

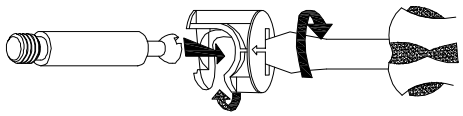

THE HEAD OF BOLT GOES INTO THE WIDE MOUTH OF THE CAM NUT.YOU THEN TURN THE NUT SO THE NARROW PART CLOSES OVER THE BOLT.

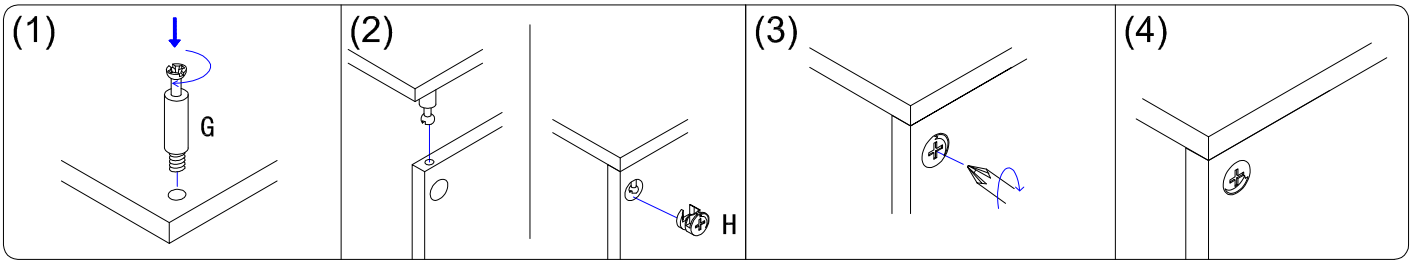

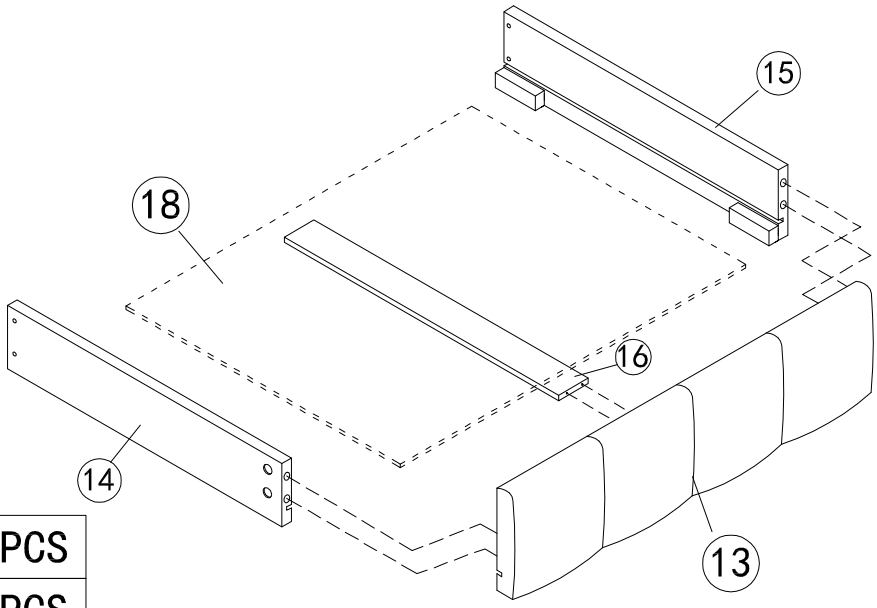

	Gx24PCS
	Hx24PCS

x4

STEP 10

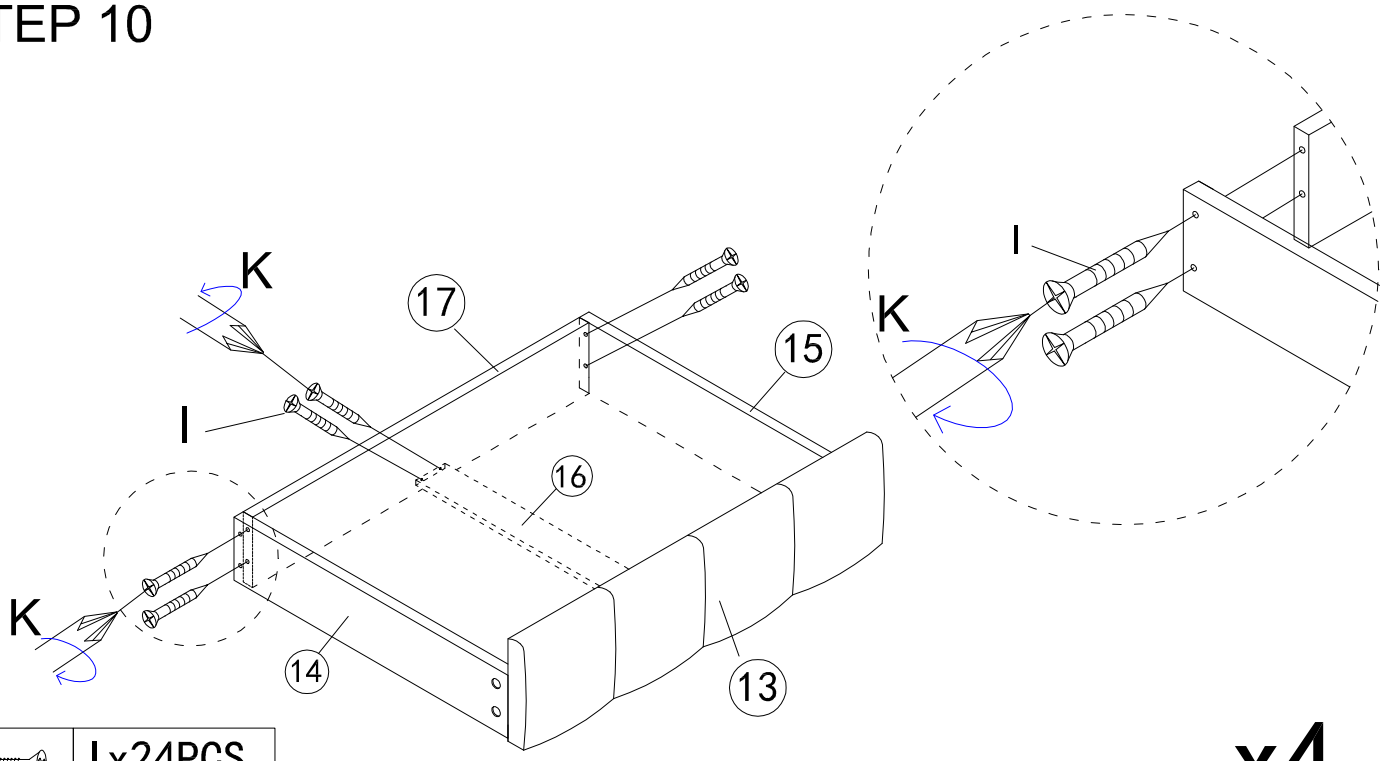

	Ix24PCS
	Kx1PC

x4

STEP 11

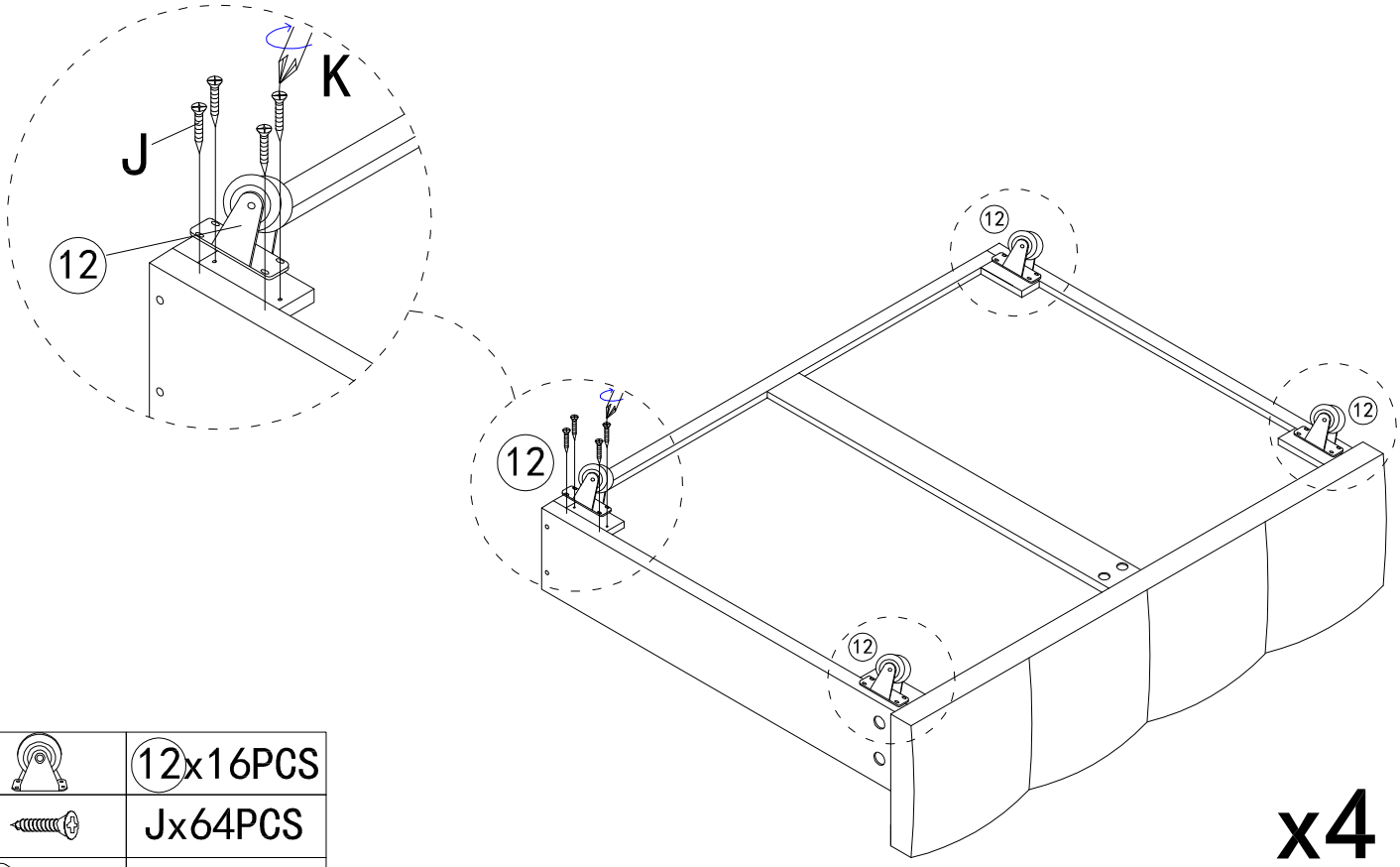

	12x16PCS
	Jx64PCS
	Kx1PC

x4

STEP 12

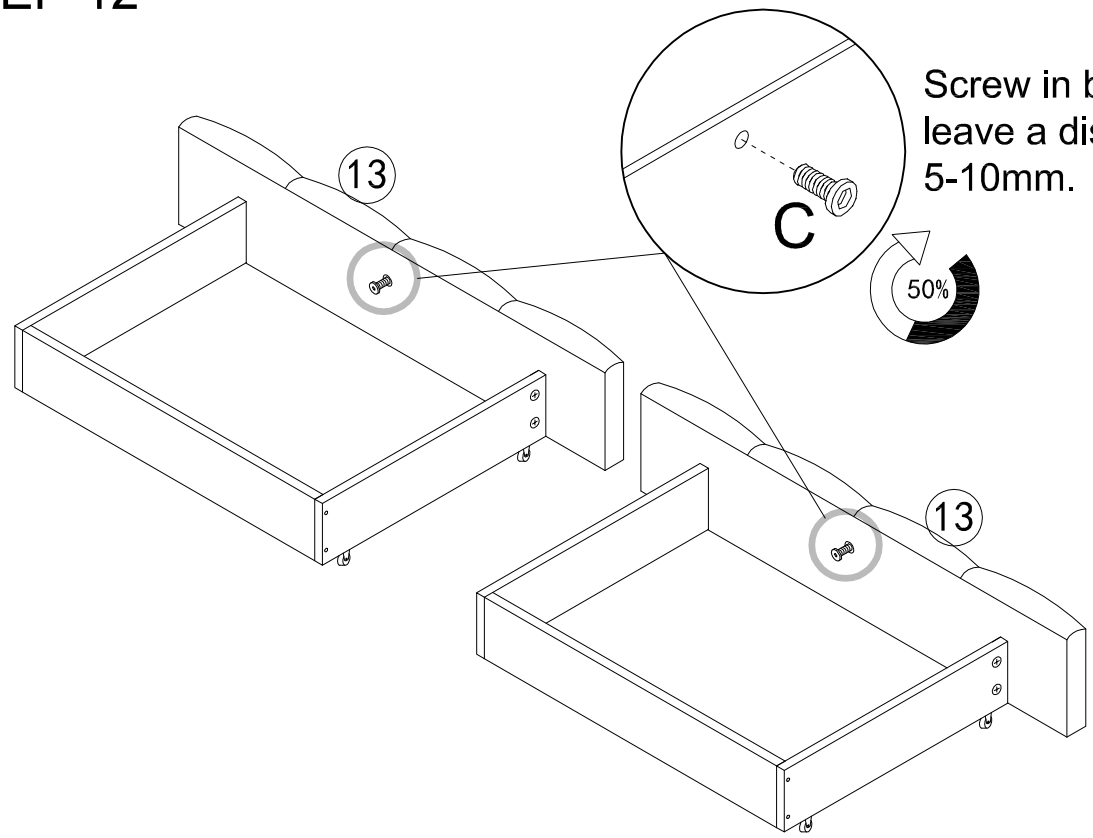

Screw in by hand and leave a distance of 5-10mm.

x4

	C x4PCS

STEP 13

Drawer panel screw hang into side cross beam hole.

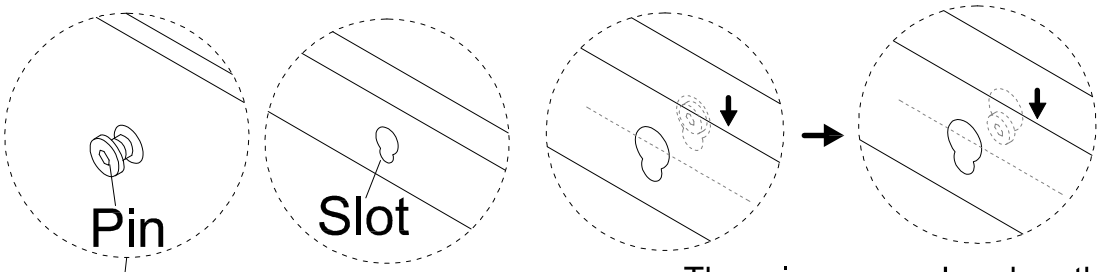
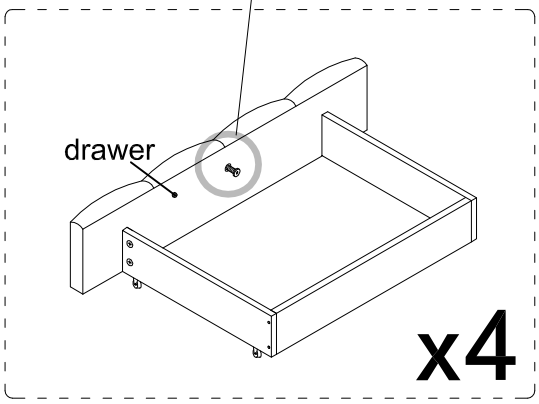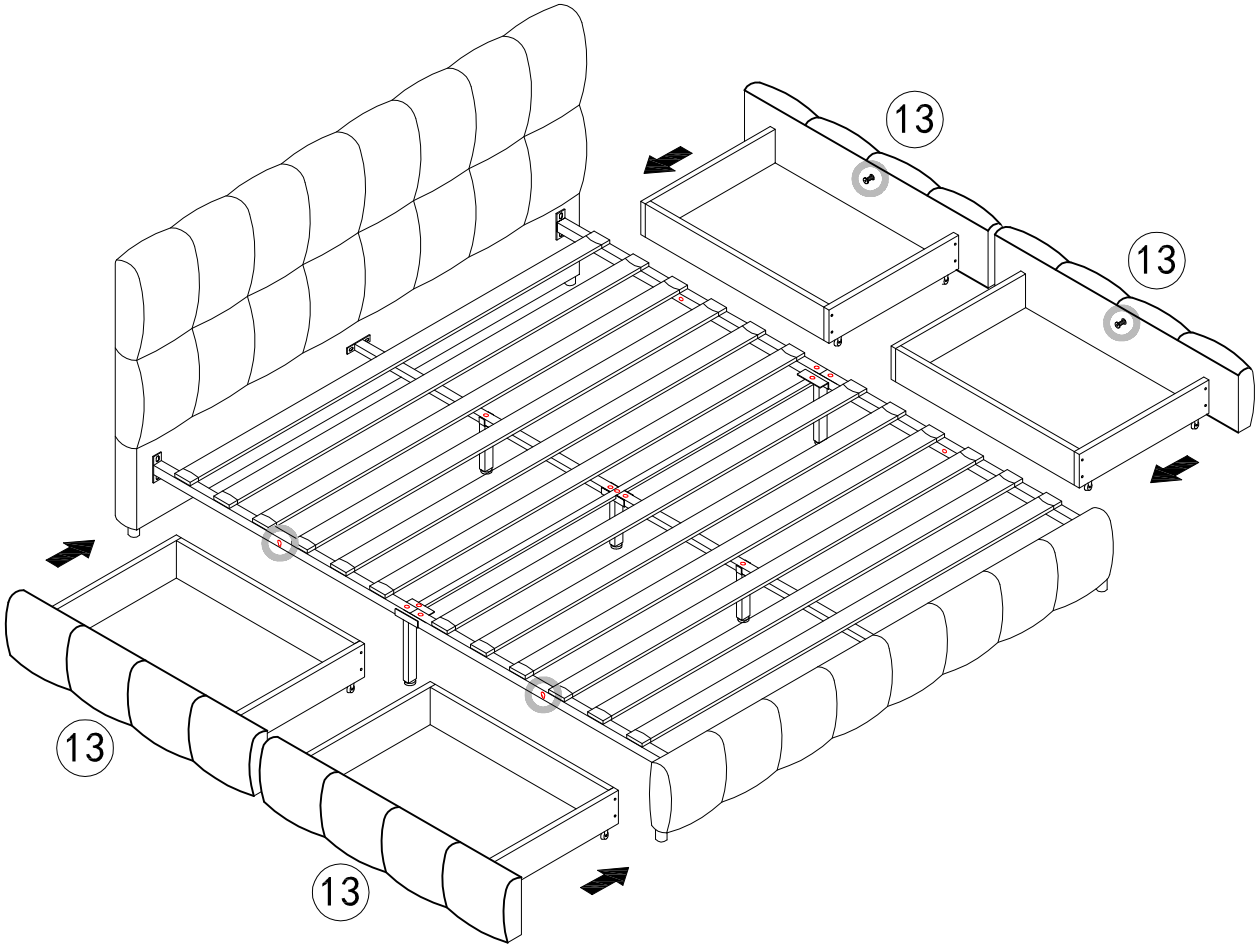
There is a screw head on the drawer board. Hang them in the hole as shown in the figure.