ASSEMBLY INSTRUCTIONS
COASTER FINE FURNITURE

Fine Furniture for every stage of life

225161KE (B1&B2)
Eastern King Bed

REVISION0 :07/03/2025

COASTERFURNITURE.COM

ITEM: 225161KE (B1&B2)

ASSEMBLY INSTRUCTIONS

ASSEMBLY TIPS:

1. Remove hardware from box and sort by size.
2. Please check to see that all hardware and parts are present prior to start of assembly.
3. Please follow attached instructions in the same sequence as numbered to assure fast & easy assembly.

WARNING!

1. Don't attempt to repair or modify parts that are broken or defective. Please contact the store immediately.
2. This product is for home use only and not intended for commercial establishments.

ASSEMBLY TIME	20 MINUTES

PARTS IDENTIFICATION

B1 (BOX 1)

A	HEADBOARD PANEL	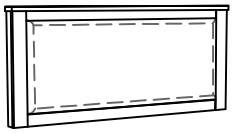	1PC
B	FOOTBOARD	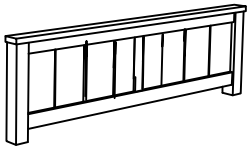	1PC
C	LEFT HEADBOARD LEG	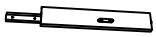	1PC
D	RIGHT HEADBOARD LEG	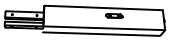	1PC
E	BED SLAT		4PCS
F	BED SLAT SUPPORT WITH LEVELER		8PCS
G	HEADBOARD BOTTOM RAIL		1PC

B2 (BOX 2)

H	BED RAIL		2PCS
HB	225161KE(B1) FROM BOX 1 HEADBOARD COMPLETE	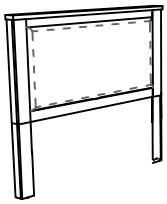	1PC
B	225161KE(B1) FROM BOX 1 FOOTBOARD	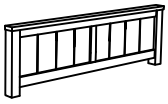	1PC

ITEM: 225161KE (B1&B2)

ASSEMBLY INSTRUCTIONS

ASSEMBLY TIPS:

1. Remove hardware from box and sort by size.
2. Please check to see that all hardware and parts are present prior to start of assembly.
3. Please follow attached instructions in the same sequence as numbered to assure fast & easy assembly.

WARNING!

1. Don't attempt to repair or modify parts that are broken or defective. Please contact the store immediately.

HARDWARE IDENTIFICATION

Z-B1(BOX 1) - HARDWARE PACK IS LOCATED IN 225161KE (B1)

1	**FLAT HEAD SCREW** **(M4 x 32mm - BLK)**		**20PCS**
2	**ALLEN WRENCH** **(M5 x 65mm - BLK)**	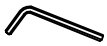	**1PC**

NOTE:

Phillips head screw driver is required in the assembly process; however, manufacturer does not provide this item.

ITEM: 225161KE (B1&B2)

ASSEMBLY INSTRUCTIONS

STEP 1

Note : Pleaseput item on soft surface.
Please take note of the marking sticker (L&R) on the leg.

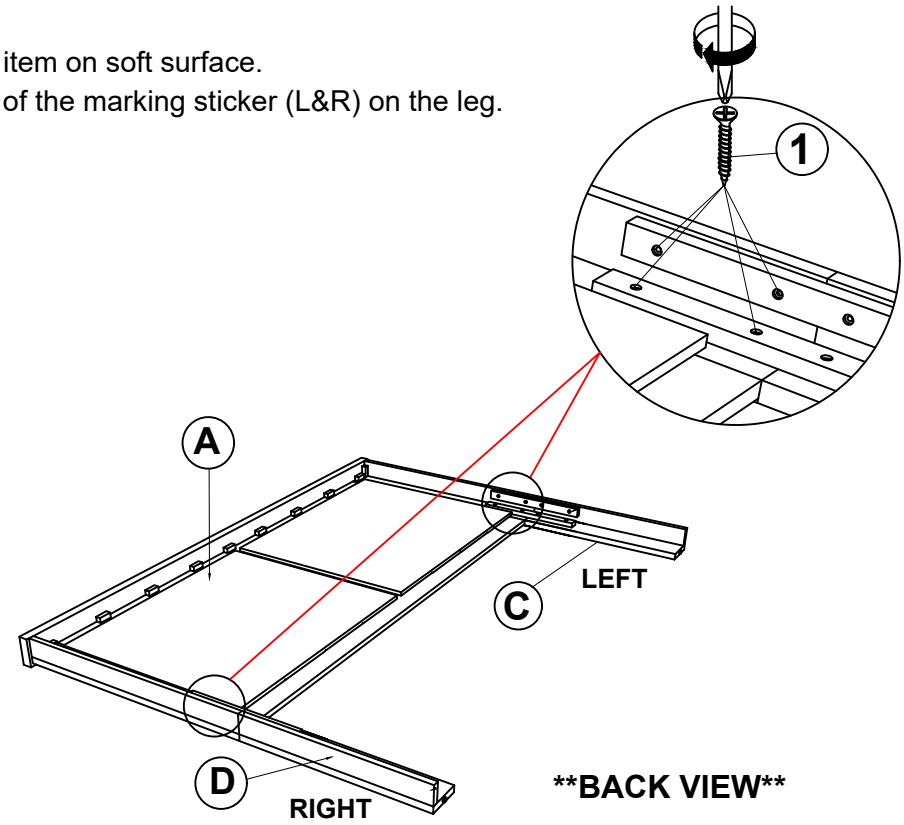

STEP 2

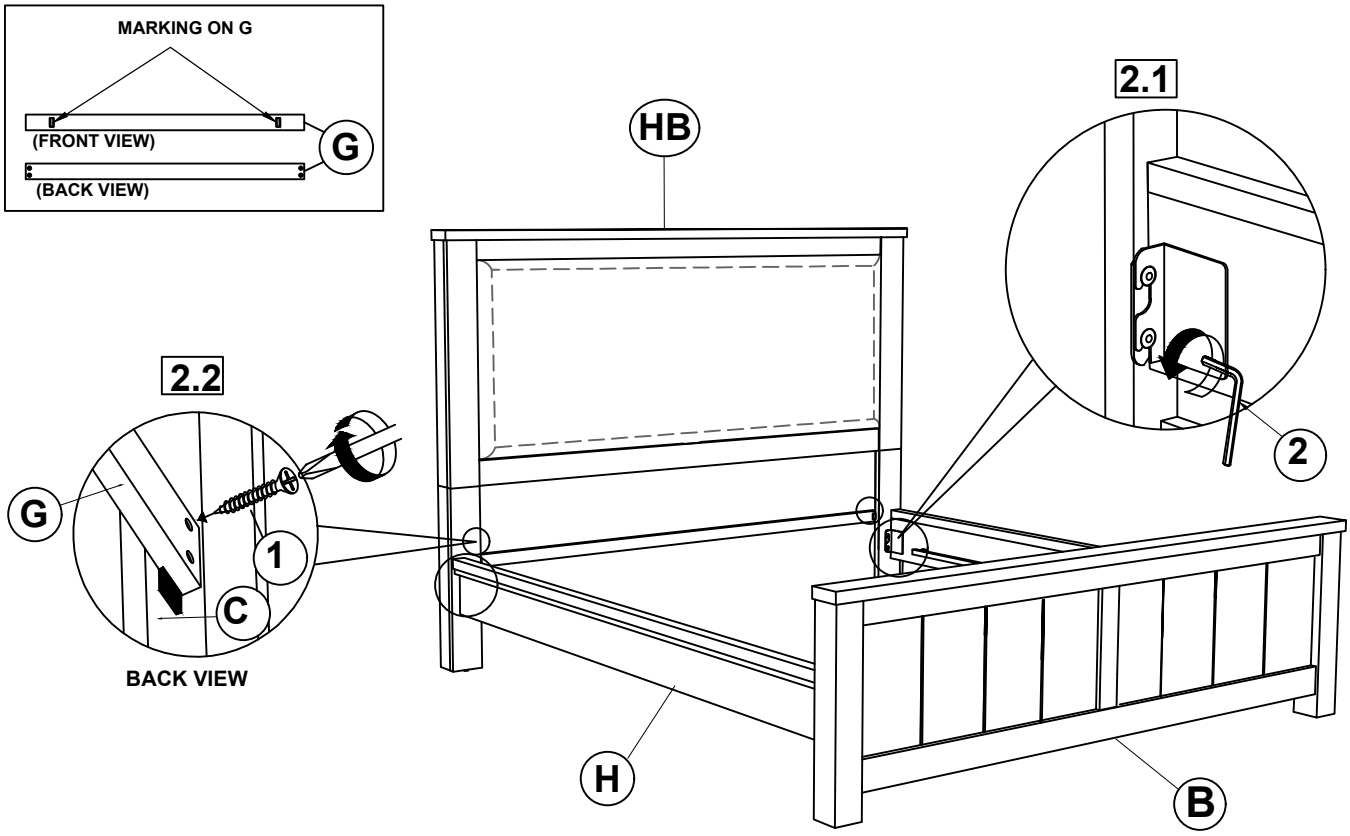

ITEM:225161KE (B1&B2)

ASSEMBLY INSTRUCTIONS

STEP 3

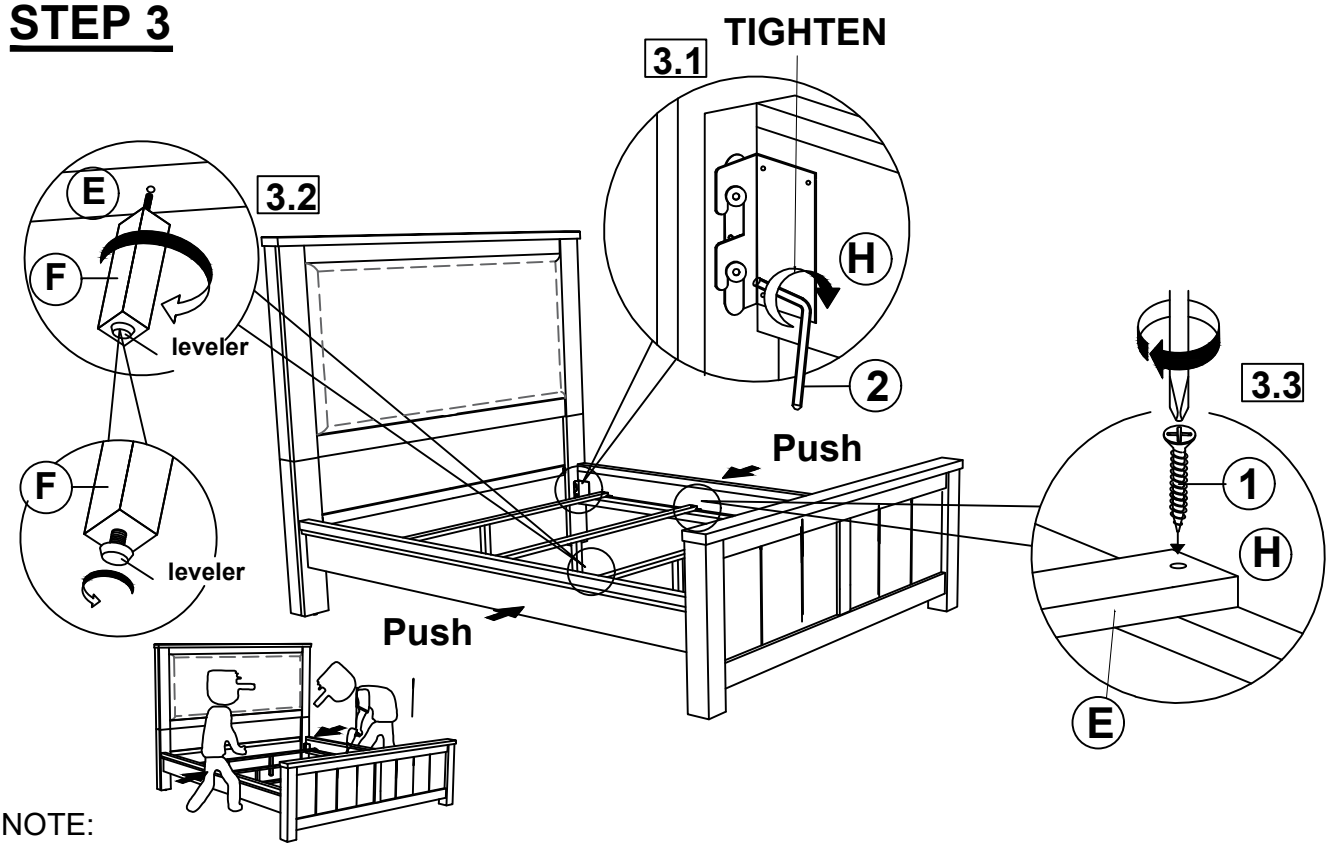

NOTE:

1-Push the side rail inward until the slats are flush and resting on the side rail support then fasten each slat to the side rail support using the provided screw.

2-The side rail warpage is a temporary condition, it will straighten out once the bed is fully assembled.

STEP 4

COMPLETE

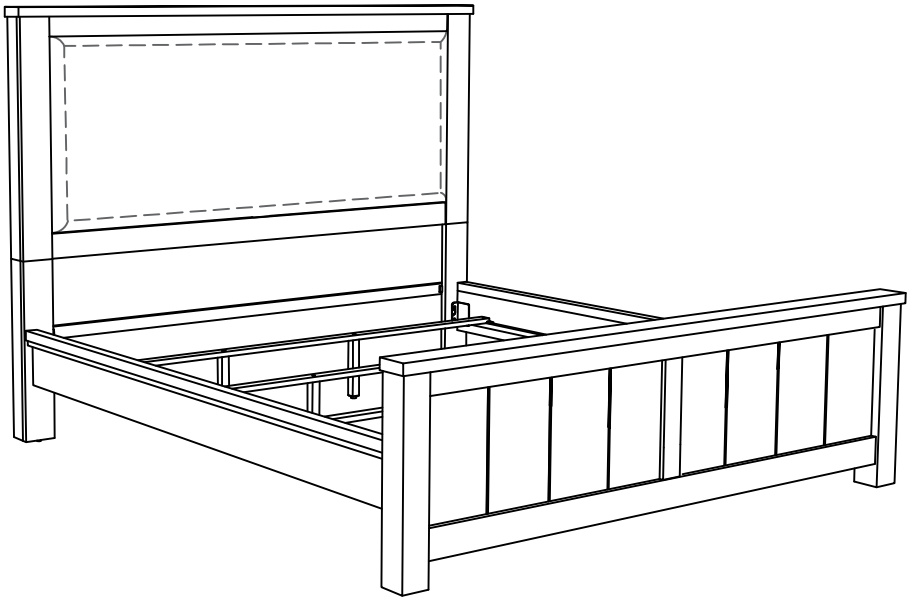

ITEM:225161KE (B1&B2)

Inner Size : 76.75"W x 81.00"D

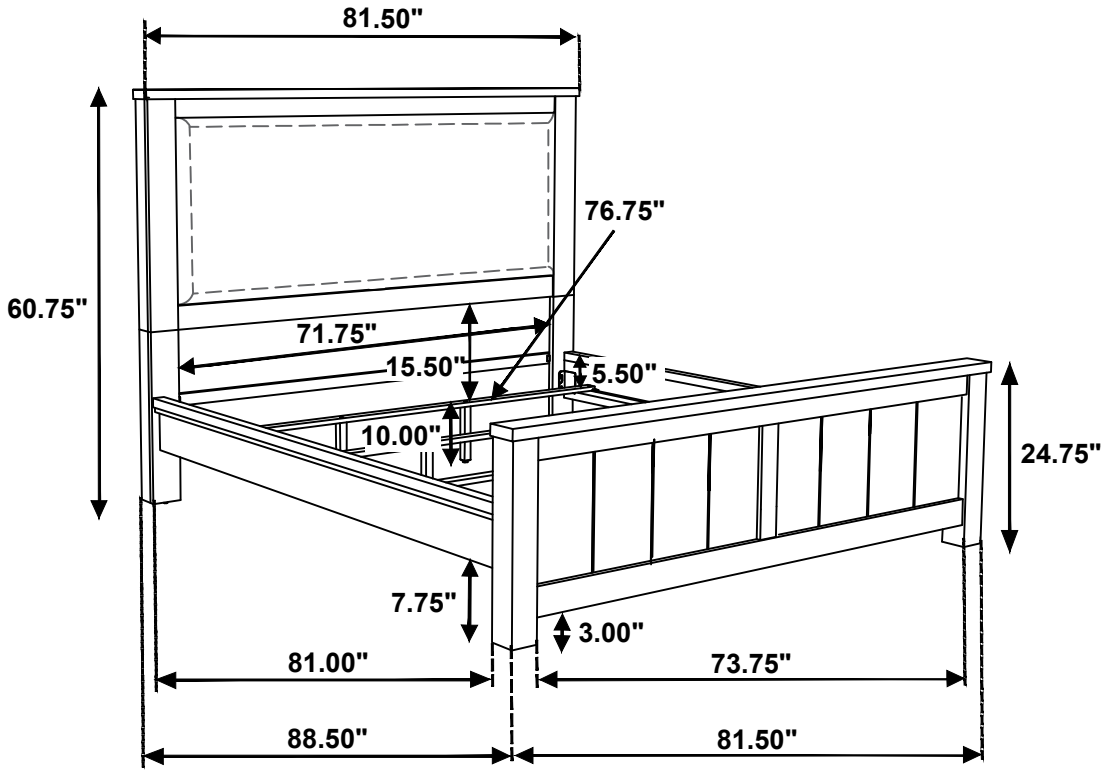

Note : Dimension tolerance ± 5%

ASSEMBLY INSTRUCTIONS
COASTER FINE FURNITURE

Fine Furniture for every stage of life

225164
Mirror

REVISION0 :07/03/2026

COASTERFURNITURE.COM

ITEM:**225164**

ASSEMBLY INSTRUCTIONS

COASTER FINE FURNITURE

ASSEMBLY TIPS:

1.Remove hardware from box and sort by size.
2.Please check to see that all hardware and parts are present prior to start of assembly.
3.Please follow attached instructions in the same sequence as numbered to assure fast & easy assembly.

WARNING!

1.Don't attempt to repair or modify parts that are broken or defective. Please contact the store immediately.
2.This product is for home use only and not intended for commercial establishments.

ASSEMBLY TIME	5 MINUTES

PARTS IDENTIFICATION

A	MIRROR	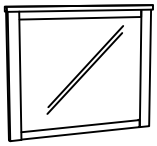	1PC
B	DRESSER FROM BOX ITEM #225163	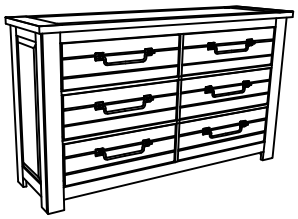	1PC
C	MIRROR SUPPORT (PACKED WITH DRESSER)	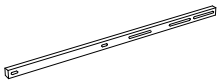	2PCS

HARDWARE IDENTIFICATION

1	SHORT BOLT (M6 x 35mm - BLK)		4PCS
2	LONG BOLT (M6 x 40mm- BLK)	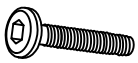	4PCS
3	LOCK WASHER (1/4" - BLK)		8PCS
4	FLAT WASHER (1/4 x 19mm" - BLK)		8PCS
5	ALLEN WRENCH (M4 x 65mm - BLK)	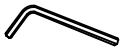	1PC

NOTE:

Phillips head screw driver is required in the assembly process; however, manufacturer does not provide this item.

ITEM:**225164**

ASSEMBLY INSTRUCTIONS

STEP 1

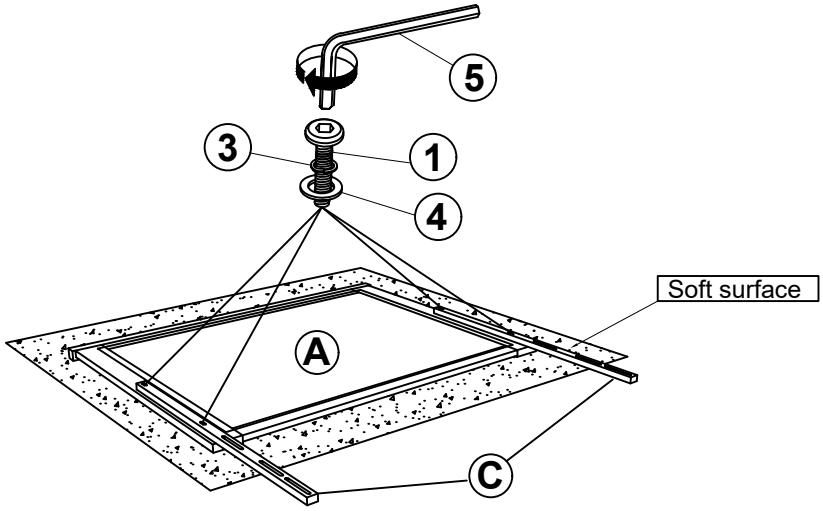

Back View

STEP 2

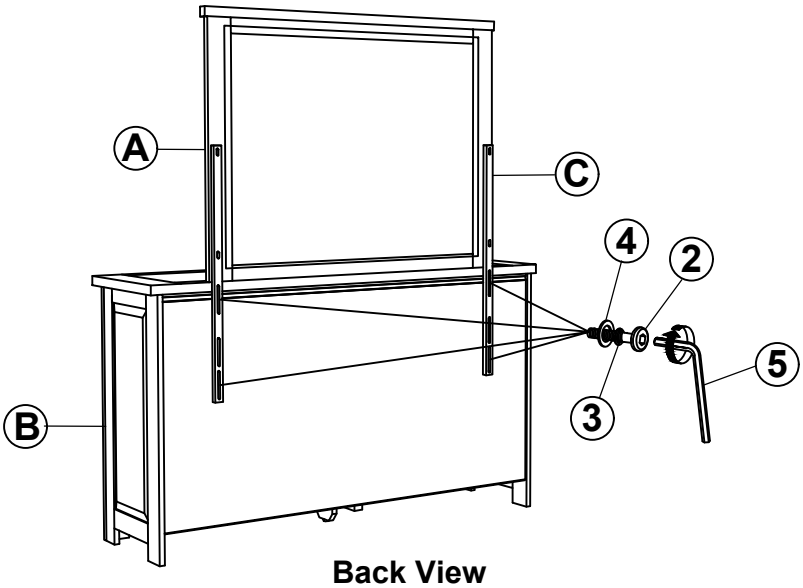

Back View

STEP 3

COMPLETE

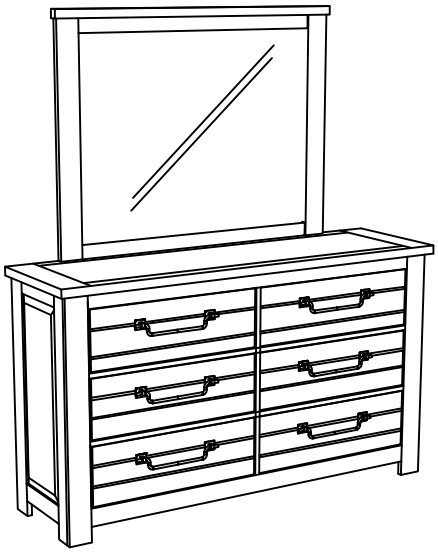

ITEM:**225164**

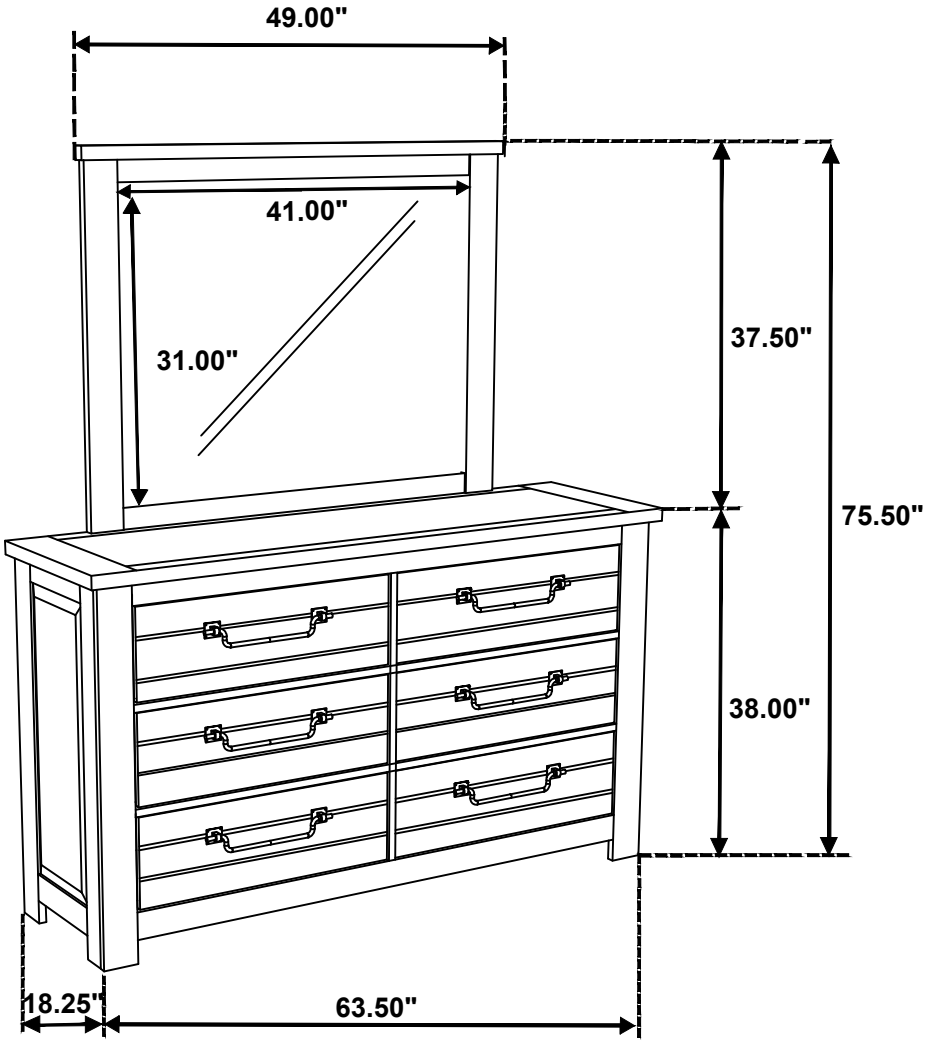

Note: Dimension tolerance ±5%

HARDWARE PHOTO

PHOTOS

FRONT VIEW

SIDE VIEW

BACK VIEW

3/4 VIEW

OTHER FEATURE

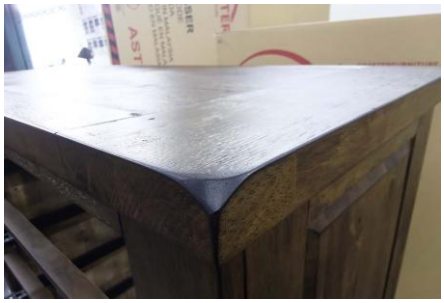

CHEST
CHIFFONNIER
CAJONERA
MADE IN MALAYSIA
FABRIQUE EN MALAISIE
HECHO EN MALASIA
225165
TM-23

WEIGHT CAPACITY

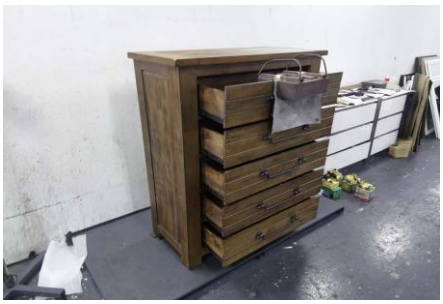

PACKING

3
COASTER
ACTIVATE YOUR WARRANTY
DO NOT CUT

WARRANTY REGISTRATION
Thank you for your purchase!
Need Assistance?
Stay Connected!
We appreciate your business and look forward to serving you!
COASTER
coasterfurniture.com

COASTER
FINE FURNITURE
Scan Here
ACTIVATE YOUR WARRANTY

CAUTION
HEAVY
TOP
ASTM-2
CAUTION
TOP

COASTER
ITEM#: 225165
WARNING: Cancer and Reproductive Harm. For more information, go to www.p65warnings.ca.gov/furniture
PINE PACKAGING (M) SDN BHD
BOX QUALITY
DOUBLE WALL
MALAYSIA

6 VIEW

COASTER
CHEST
CHIFFONNIER
CAJONERA
MADE IN MALAYSIA
FABRIQUE EN MALAISIE
HECHO EN MALASIA
225165
ASTM-23
ITEM NO. : 225165
CHEST
CHIFFONNIER
CAJONERA
QTY: 1 PC