PFISTER

Ashfield™
Shower Trim

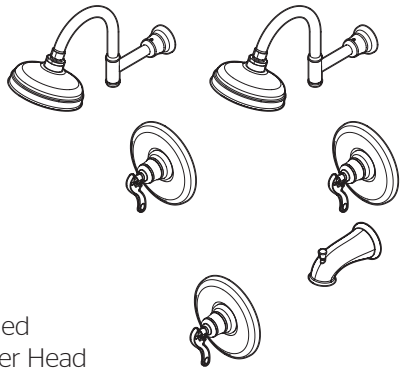

R89-7YPC Finish*(CC)* ❑ R89-8YPC Finish*(CC)* ❑
R89-7YPK Finish*(KK)* ❑ R89-8YPK Finish*(KK)* ❑
R89-1YPC Finish*(CC)* ❑ R89-1YPU Finish*(UU)* ❑ R89-7YPU Finish*(UU)* ❑ R89-8YPU Finish*(UU)* ❑
R89-1YPK Finish*(KK)* ❑ R89-1YPY Finish*(YY)* ❑ R89-7YPY Finish*(YY)* ❑ R89-8YPY Finish*(YY)* ❑

- Single Control
- Trim Only, Valve Not Included
- Decorative Rain Can Shower Head

Specifications

Features

- Complete Collection with Coordinating Lavatory and Roman Tub Options
- Lever Handle
- Quick Trim Installation-Attaches Without Tools, No Exposed Screws
- 2.5 GPM Shower Head
- Fits 0X8 and JX8 Valve Bodies
- Metal Shower Arm and Flange
- Fits TX8, and VB8 Valve Bodies (1YP Only)
- Valve Only (1YP Only)
- Shower Only (7YP Only)
- Trim Only, Valve Not Included
- Tub & Shower (8YP Only)
- Threaded Tub Spout (8YP Only)
- Decorative Rain Can Shower Head
- Easy Clean Nozzles
- Pforever Warranty®

Code Compliance

Pfister products are designed and manufactured in compliance with the following standards and codes:

- IAPMO Certified
- CSA B125 Certified
- ASME A112.18.1
- ADA Compliant-ANSI A117.1 (Lever handles only)

Dimensions

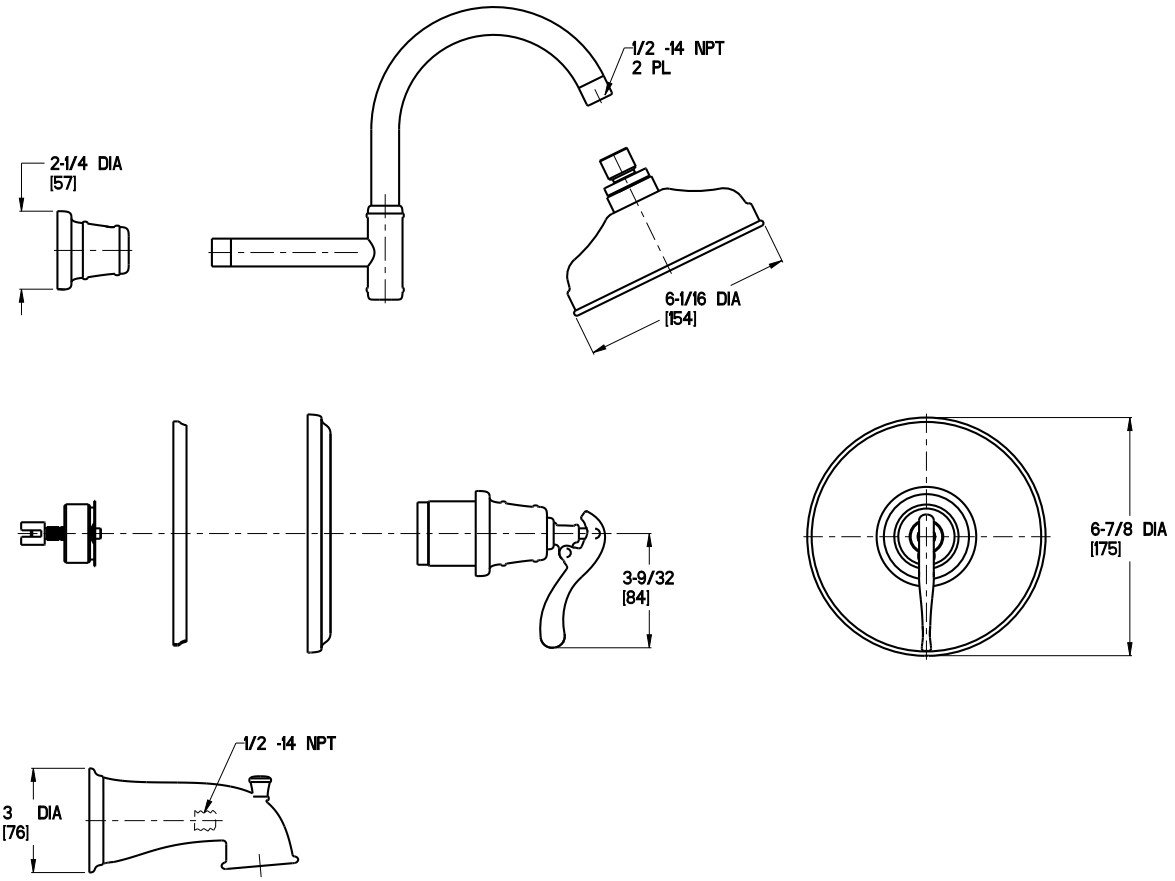

1-800-PFAUCET (732-8238) • pfisterfaucets.com/support

Copyright © 2013, Pfister Inc.