INSTALLATION INSTRUCTIONS

READ AND SAVE THESE INSTRUCTIONS

WARNING! SHUT POWER OFF AT FUSE OR CIRCUIT BREAKER.

AVERTISSEMENT! COUPER LE COURANT AU NIVEAU DES FUSIBLES OU DU DISJONCTEUR.

READ AND SAVE THESE INSTRUCTIONS

TOOLS REQUIRED

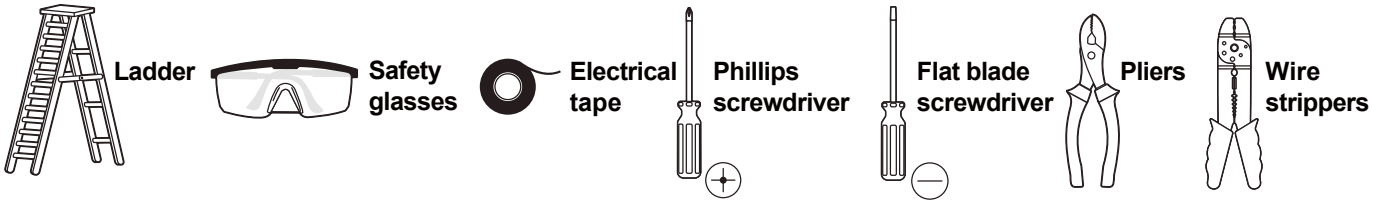

PREPARATION

1. Shut off power at the fuse box or circuit breaker box and remove the old fixture including the mounting hardware.
2. Carefully unpack your new fixture and lay out all the parts in a clean area. Take care not to misplace any small parts necessary for installation.

Care and maintenance

Use a clean, soft cloth to wipe the surface of the fixture.

DO NOT use any cleaners with chemicals, solvents or harsh abrasives.

Dimming: Dimmable with ELV and/or LED compatible wall dimmer switches.

INSTALLATION & ASSEMBLY (Fig.1 & Fig.2)

3. An octagonal junction box must be installed at each desired location, before installing the luminaire. The box must have a depth of at least ½''.
4. Twist counter clockwise to loosen canopy screws (Fig. 1).
5. Remove mounting bracket from luminaire. Do not remove any other parts (Fig. 1).
6. Adjust mounting bracket so the arms are facing away from junction box. Pull power supply wires from junction box through the center opening of mounting bracket (Fig. 2).
7. Attach mounting bracket to junction box, make sure mounting bracket is flushed and leveled before tightening with mounting screws (Fig. 2).
8. Make electrical wiring connections between luminaire and power supply (see ELECTRICAL WIRING below).
9. Position luminaire over junction box, pass canopy over arms from mounting bracket.
10. Secure canopy and mounting bracket with canopy screws.

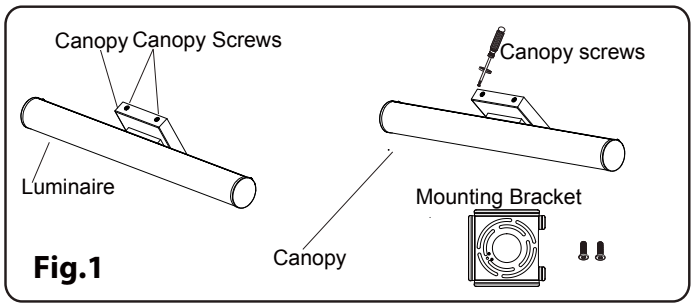

Fig.1

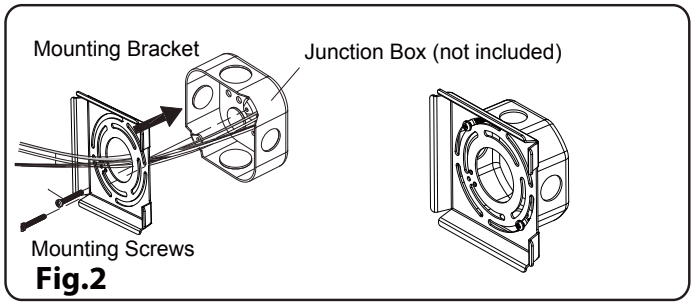

Fig.2

ELECTRICAL WIRING (Fig. 3)

11. Strip 3/8'' of bare power supply wires from junction box.
12. Follow the wires connection guide to connect wires from luminaire to power supply wires from junction box, using the wire nuts.
13. Connect neutral wire (white) from junction box to neutral wire (white) from luminaire.
14. Connect hot wire (black) from junction box to live wires (black) from luminaire.
15. Connect green ground wire from luminaire to bare copper ground wire from junction box, using a wire nut.
16. Once the connections are done, push wires back inside junction box.

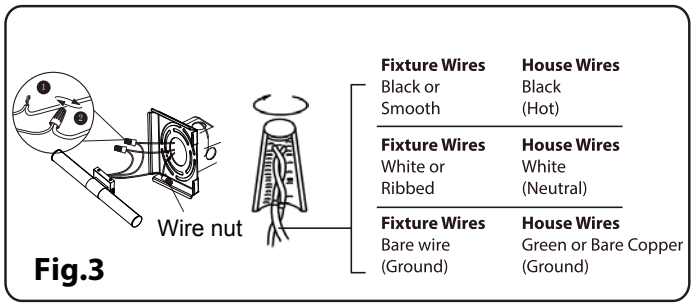

Fig.3

Your installation is now complete. Return power and test the fixture.
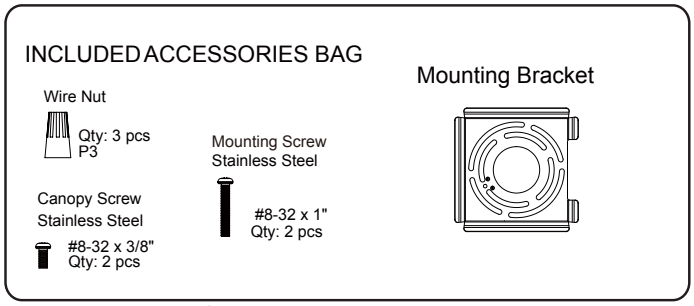
IMPORTANT: FIXTURE SHOULD BE INSTALLED BY A QUALIFIED ELECTRICIAN TO ENSURE PROPER WIRING AND INSTALLATION.