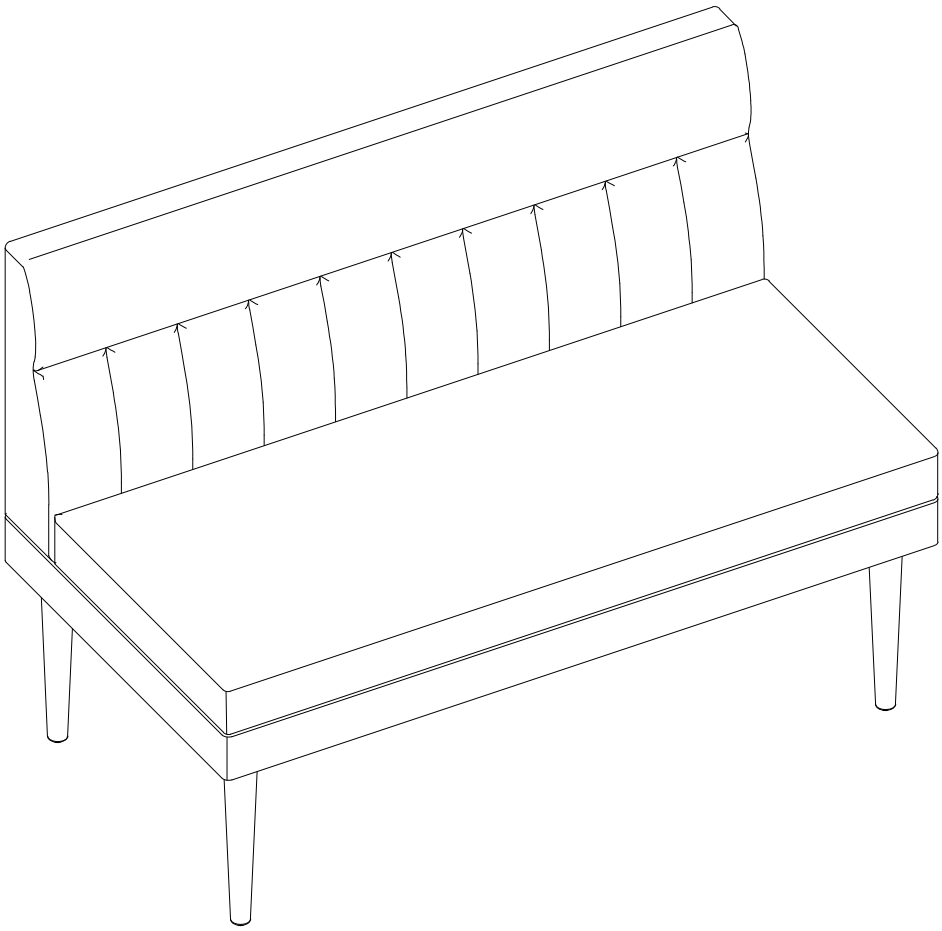

ITEM NO. SFVT1944

Scan for manual,
video & advice.

MAINTENANCE AND WARNINGS

Thank You For Choosing Our Furniture.
Please read the instructions and warnings carefully before use, to ensure safe and satisfactory operation of this product.

NOTE :
This brochure contains IMPORTANT safety info. Please read and keep it for future reference.



Weight Limitation
500**LBS**

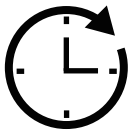

Installation:
30 minutes.



One Person



Before You Start

Please follow the steps below:

- Unbox the package and check if all parts and accessories are complete.
- If you find something missing, stop assembly and contact your supplier immediately.
- Please do not completely tighten all the hardware until the entire assembly is completed! Be sure to tighten all the hardware once the assembly completed.
- NOTE:Should be assembled on soft surface to keep balance.

After-Sales Service

- If you encounter any issues or need technical support during use, please contact our after-sales team. We offer long-term maintenance and warranty services.

Warranty

We strive to offer high , quality products, and we also try our best to satisfy each and every customer that orders from us with product or service as needed. Each customer must provide a record of their order such as the order number, or item receipt for any items that are out of the warranty period you may also still receive replacement parts by purchasing them with our company if they are available.

Are you having dificulty with assembly? Missing parts? Please send email with your order number to **customerservice@hulalahome.com**

For return, please check the return policy with the retailer or market place you bought from. Appreciate your purchasing from us. Pop up your life by our furniture piece!

Daily Maintenance

- Keep furniture away from heat.
- Do not use cleaning agents containing acids, alkalis,or corrosive substances, as they may damage the surface. It is recommended to use neutral cleaning agents or specialized furniture cleaners.
- Do not place furniture under direct sunlight, material will possibly fade over time.
- Do not use on site dry cleaning machine.
- Children should not climb or jump on the furniture.
- Do not write on furniture without a padded barrier to protect the surface.
- Not for commercial use, for residential use only.

Exploded Diagram

Please confirm that you have received all the parts, then begin the assembly.

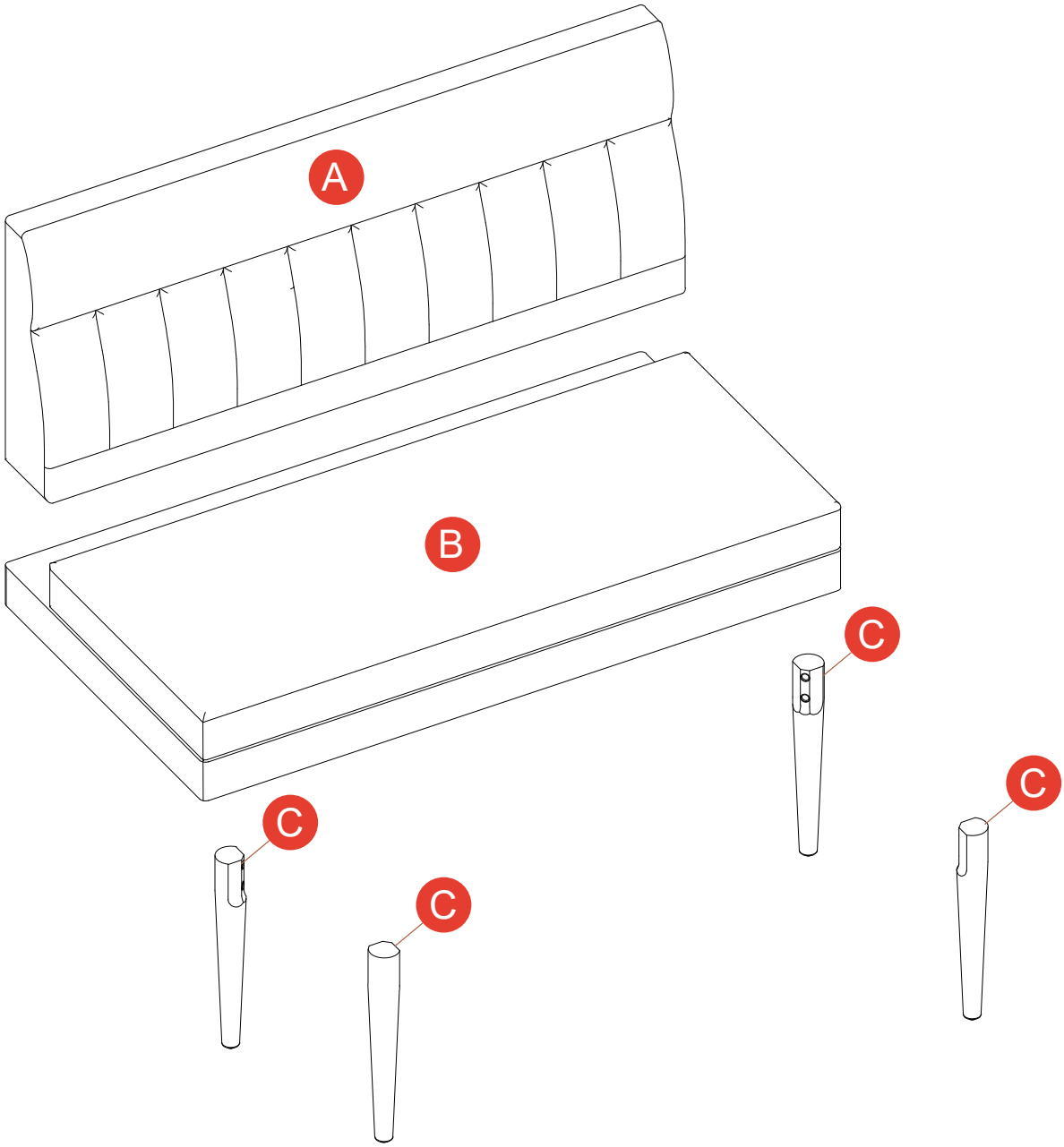

Parts List

A ×1

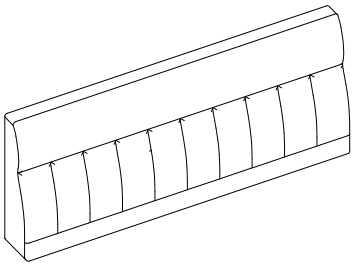

Backrest

B ×1

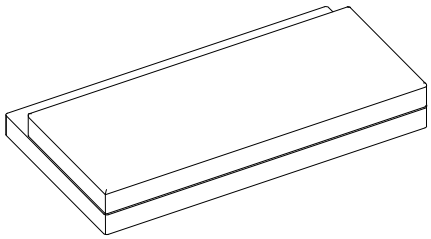

Seat Cushion

C ×4

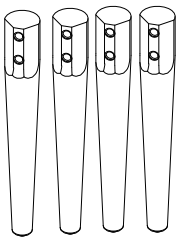

Leg

Hardware List

1 ×8+1

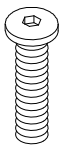

Bolt
D5/16"xL2"

2 ×5+1

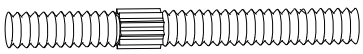

Bolt
D5/16"xL3.5"

3 ×13+2



SpringWasher
D5/16"*13*2

4 ×13+2



Flat Washer
D5/16"x22*2

5 ×1



Allen Key M4

6 ×5+1



Hex bolt
D5/16"x12*6

7 ×1



Wrench M12

8 ×2

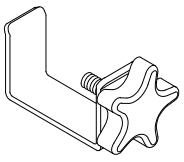

U Metal Bracket
70*43*25mm

ASSEMBLY INSTRUCTIONS

Step 1

Insert Screw Bolts (2) into Backrest (A) and then tighten it.

2	x5	D5/16"xL3.5"

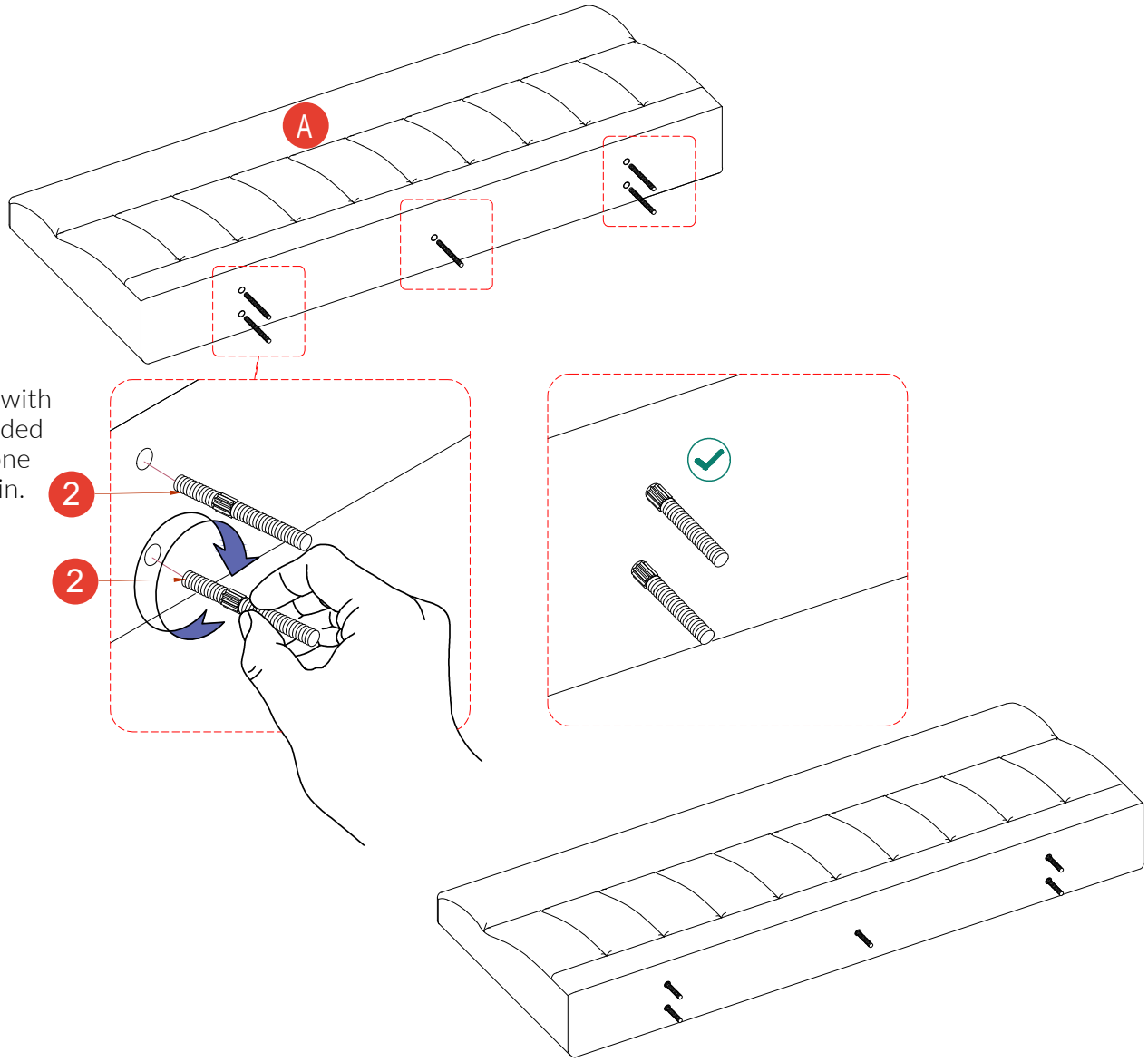

Note: The end with the short threaded section is the one to be screwed in.

Attention:
Before assembling, please place a cloth on the ground, then put the product on it to prevent from getting dirty.

Step 2

Secure Backrest (A) to Seat Cushion (B) with Hex bolts (6), Spring Washer (3), Flat Washer (4) andthen tighten them 100%. This assembly step requires two person to completed.

3		x5	D5/16"*13*2
4		x5	D5/16"*22*2
6		x5	D5/16"x12*6
7		x1	Wrench M12

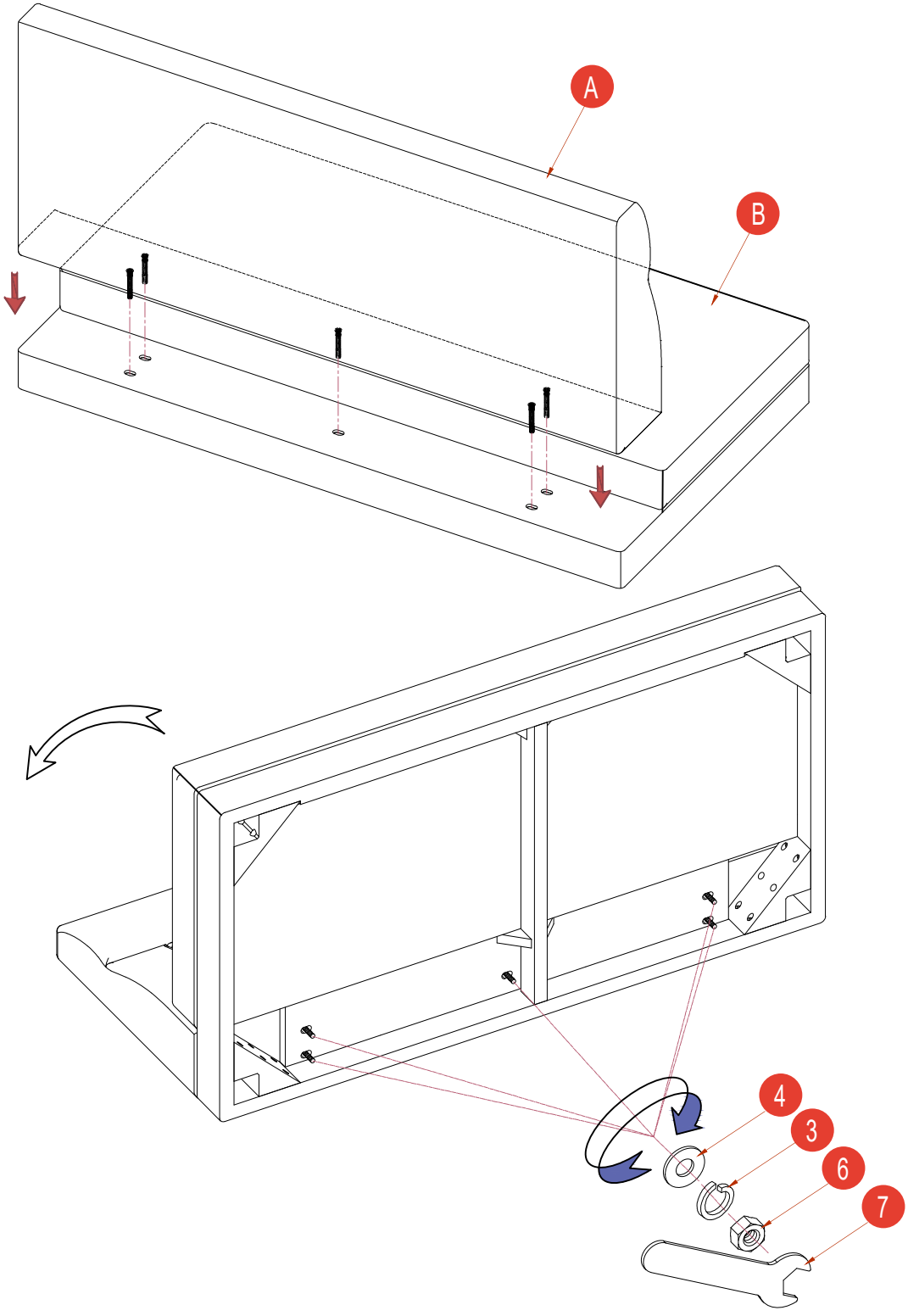

Step 3

Attach legs (C) to Seat Cushion (B), secure with Bolts (1), Spring Washer (3), Flat Washer (4) and then tighten them 100%.

1	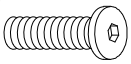	x8	D5/16"xL2"
3		x8	D5/16"*13*2
4		x8	D5/16"x1 9*2
5		x1	Allen Key M4

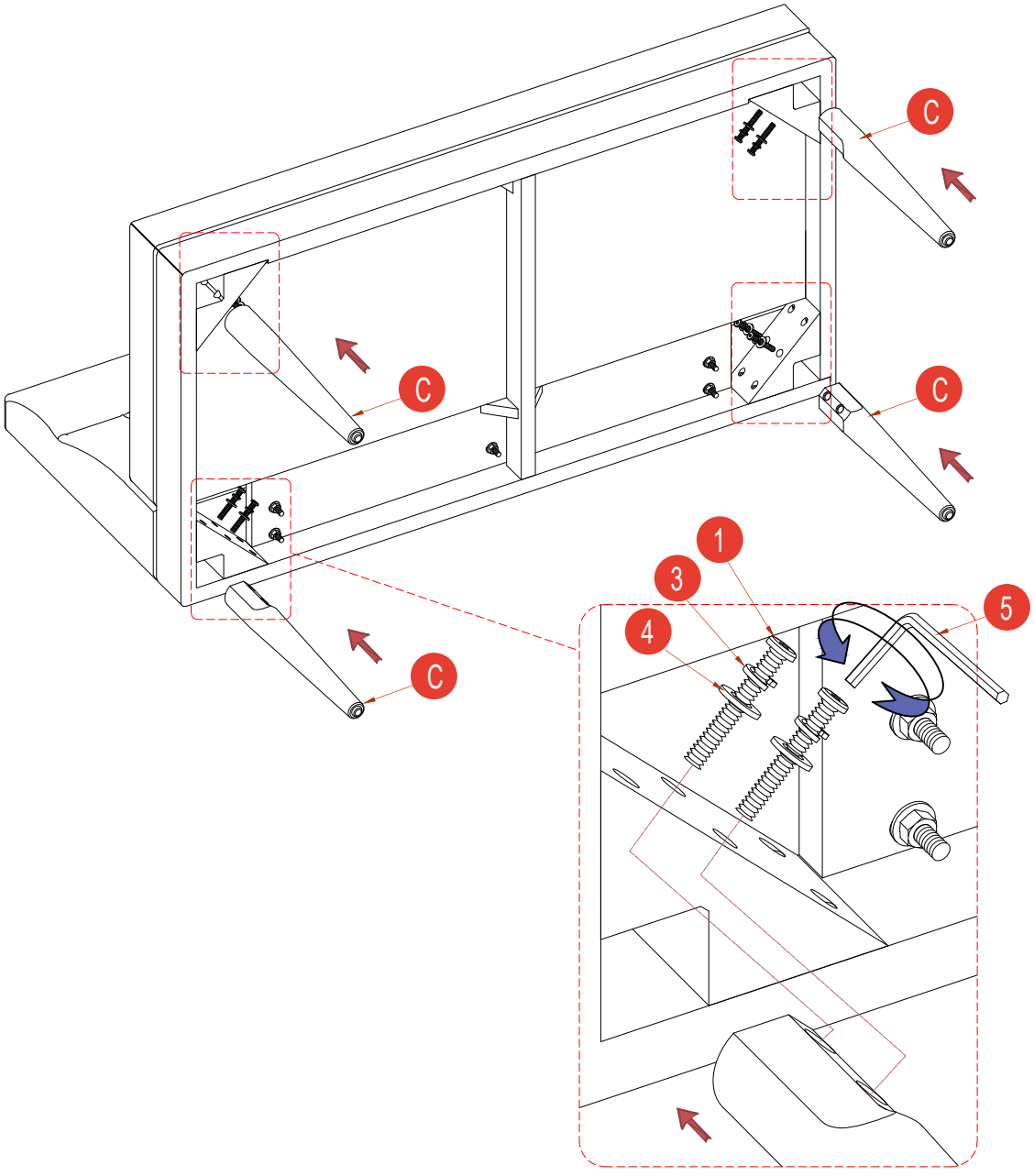

Step 4

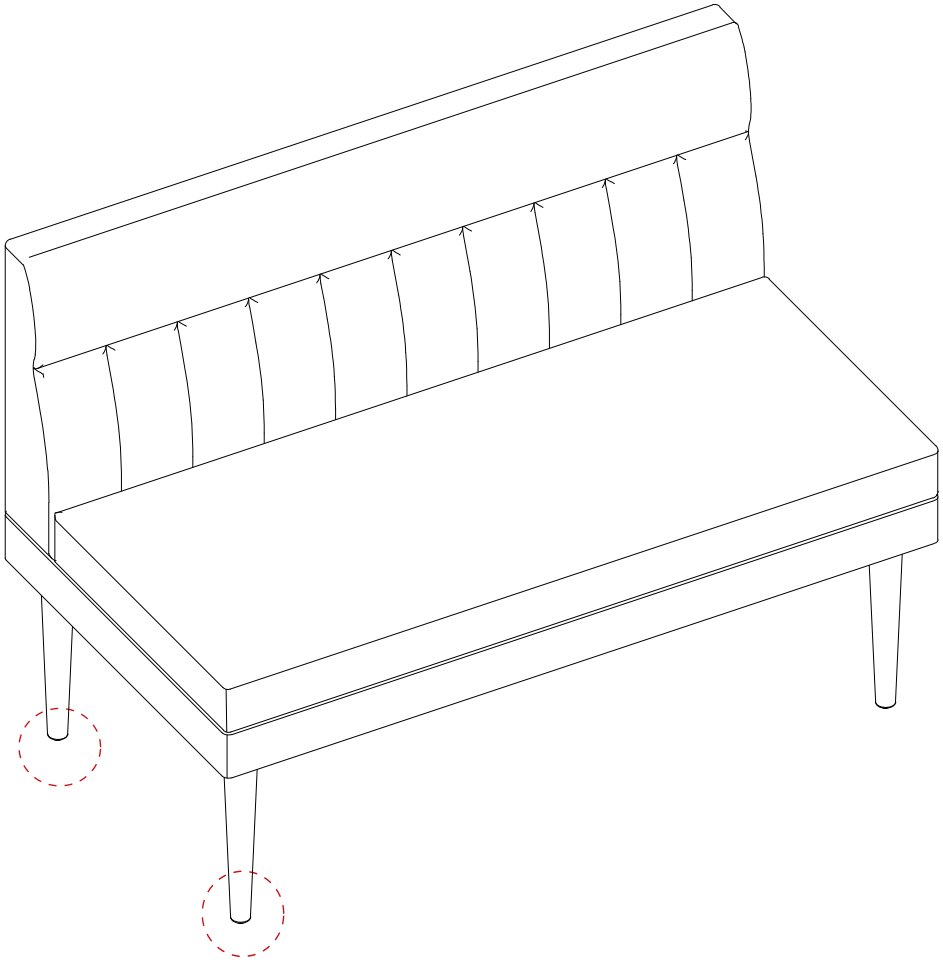

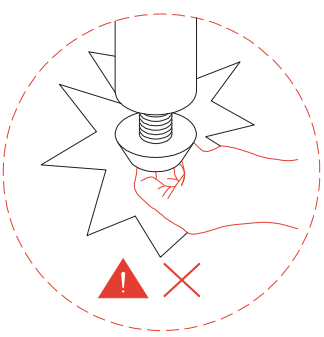

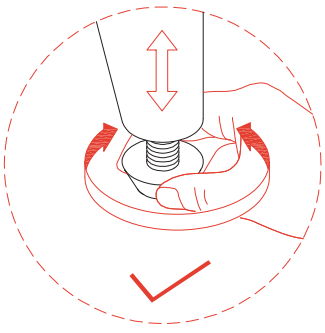

Attention:
Before the next step, adjust the feet of the locker to keep it level.