# Installation Guide & Users Manual

## UNDER CABINET RANGE HOOD

## Model:KMJ01-30"/ KMJ01-36"

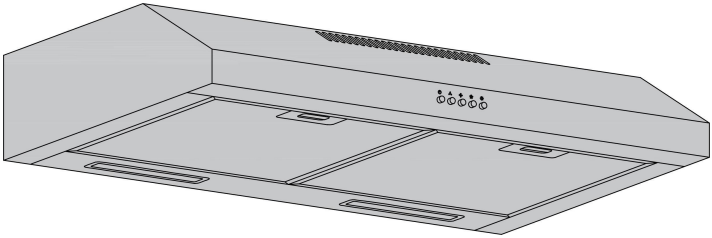

## IMPORTANT:

Read and save these instructions.

## NOTICE:

**For residential use only.**
**Installer:** Leave this guide with the homeowner.
**Homeowner:** Keep this guide for future reference.

Intertek

## THANK YOU FOR YOUR PURCHASE

**Thank you for your purchase. We know that you have many brands and products to choose from and we are honored to know that you have decided to take one of our products into your home and hope that you enjoy it.**

Our appliances are designed according to the strictest safety and performance standard for the North American market. We follow the most advanced manufacturing philosophy. Each appliance leaves the factory after thorough quality inspection and testing. We are ready to answer any questions you may have regarding how to install, use and care for your products. We hope that this manual will help you learn to use the product in the safest and most effective manner .

If you have any questions or concerns, please contact our Customer Support at:
**support@itylza.com**



## TABLE OF CONTENTS


| | |
|---|---|
| SAFETY INSTRUCTIONS | 4 |
| ALUMINUM FILTERS | 5 |
| PARTS DIAGRAM | 6 |
| INSTALLATION REQUIREMENTS | 7 |
| PRE-INSTALLATION PROCEDURES | 8 |
| INSTALLATION INSTRUCTIONS | 9-10 |
| RECIRCULATION CHARCOAL FILTERS | 11 |
| OPERATING INSTRUCTIONS | 12 |
| MAINTENANCE | 13 |
| TROUBLSHOOTING | 14 |
| MEASUREMENNTS & DIAGRAMS | 15 |
| WARRANTY & SERVICE | 16 |

# IMPORTANT SAFETY INSTRUCTIONS

**Read all instructions before using this appliance.**

Save these instructions for future references

**Approved for residential appliances**

**For residential use only**

**IMPORTANT SAFETY INSTRUCTIONS**

**CAUTION**

**FOR GENERAL VENTILATING USE ONLY. DO NOT USE TO EXHAUST HAZARDOUS OR EXPLOSIVE MATERIALS OR VAPORS.**

**CAUTION**

**To reduce risk of fire and to properly exhaust air, do not vent exhaust air into spaces within walls, ceilings, attics, crawl spaces, or garages.**

**WARNING**

**TO REDUCE THE RISK OF FIRE, USE ONLY METAL DUCT WORK.** Install this hood in accordance with all requirements specified.

**WARNING**

**TO REDUCE THE RISK OF FIRE, ELECTRIC SHOCK, OR INJURY TO PERSONS, OBSERVE THE FOLLOWING:**

A. Use this unit only in the manner intended by the manufacturer. If you have questions, contact the manufacturer

B. Before servicing or cleaning the unit, switch power off at service panel and lock service panel disconnecting means to prevent power from being switched on accidentally. When the service disconnecting means cannot be locked, securely fasten a prominent warning device, such as a tag, to the service panel.

C. Installation Work and Electrical Wiring Must Be Done By Qualified Person(s) In Accordance With all Applicable Codes & Standards, Including Fire-rated Construction.

D. Sufficient air is needed for proper combustion and exhausting of gases through the flue (Chimney) of fuel burning equipment to prevent back- drafting. Follow the heating equipment manufacturers guideline and safety standards such as those published by the National Fire Protection Association (NFPA), the American Society for Heating, Refrigeration and Air Conditioning Engineers (ASHRAE), and the local code authorities.

E. When cutting or drilling into wall or ceiling, do not damage electrical wiring and other hidden utilities.

F. Ducted systems must always be vented to the outdoors.

**WARNING**

**GROUNDING INSTRUCTIONS**

This appliance must be grounded. In the event of an electrical short circuit, grounding reduces the risk of electric shock by providing an escape wire for the electric current. This appliance is equipped with a cord having a grounding wire with a grounding plug. The plug must be plugged into an outlet that is properly installed and grounded.

**WARNING - IMPROPER GROUNDING CAN RESULT IN A RISK OF ELECTRIC SHOCK.**

Consult a qualified electrician if the grounding instructions are not completely understood, or if doubt exists as to whether the appliance is properly grounded.
Do not use an extension cord. If the power supply cord is too short, have a qualified electrician install an outlet near the appliance.

**WARNING**

**TO REDUCE THE RISK OF INJURY TO PERSONS, IN THE EVENT OF A RANGE TOP GREASE FIRE, OBSERVE THE FOLLOWING:**

A. SMOTHER FLAMES with a close - fitting lid, cookie sheet, or other metal tray, then turn off the gas burner or the electric element. **BE CAREFUL TO PREVENT BURNS**. If the flames do not go out immediately, **EVACUATE AND CALL THE FIRE DEPARTMENT.**

B. **NEVER PICK UP A FLAMING PAN** - you maybe **DO NOT USE WATER**, including wet dishcloths or towels - a violent steam explosion will result.

Always leave safety grills and filters in place.Without these components, operating blowers could catch onto hair, fingers and loose clothing.
The manufacturer declines all responsibility in the event of failure to observe the instructions given here for installation,maintenance and suitable use of the product. The manufacturer further declines all responsibility for injury due to negligence and the warranty of the unit automatically expires due to improper maintenance.

**WARNING**

**To Reduce The Risk Of Fire Or Electric Shock, Do Not Use This Hood With Any External Solid State Speed Control Device.**

**WARNING**

**Unplug or disconnect the appliance from the power supply before servicing.**



# ALUMINUM FILTERS

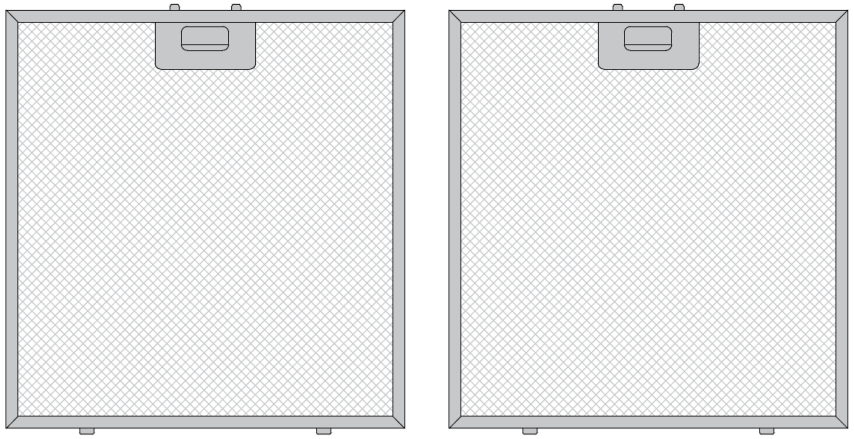

## *About Your New Filters*

Aluminum Filters are recommended to be replaced every 6 months depending on usage. Clicking on the link will take you to the official website to purchase aluminum filters:

Purchase Website: https://itylza.com/

## *Cleaning my Aluminum Filters*

Your filters can be hand washed and cleaned to increase time between replacements. Aluminum Filters may not be placed in the dishwasher.

# PARTS DIAGRAM

**MODEL: KMJ01-30"/ KMJ01-36"**

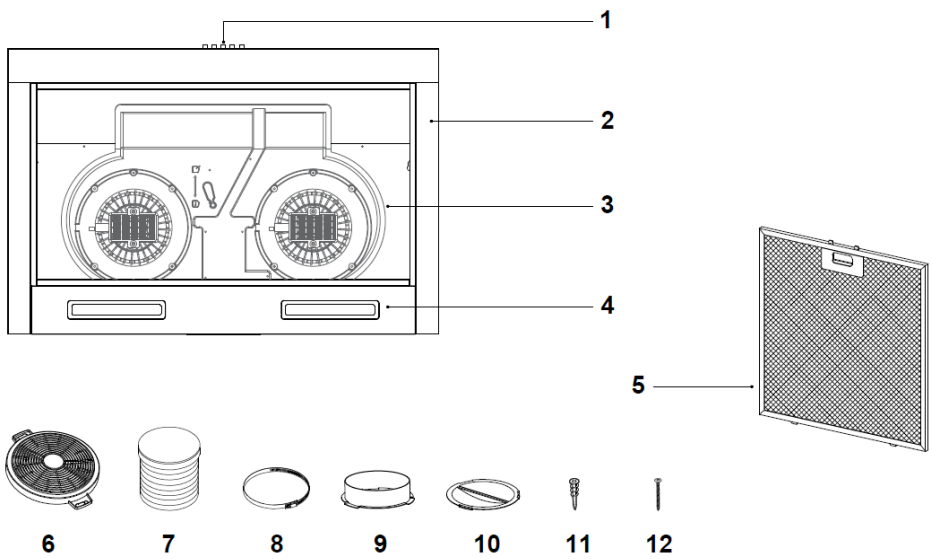


**Other accessories:**

1. 3-Speed Mechanical Control
2. Main Body
3. Motor Housing
4. LED Lights (2 pcs)
5. Aluminum Filter (2 pcs)
6. Carbon Filter (2 pcs)
7. smoke tube (1 pcs)
8. Duct Clamps (1 pcs)
9. Damper (1 pcs)
10. Air Outlet Cap (1 pcs)
11. Screws 5mm x 49mm (4 pcs)
12. Wall Anchors 10mm x 43.3mm (4 pcs)



# INSTALLATION REQUIREMENTS

1. Please read the following instructions carefully.
2. This Range Hood can be vented through the top or back. Remove the Air Outlet Cap according to the option chosen (Fig. 1). For ductless installation, install an Air Outlet Cap on both the rear and top vent holes.
3. For optimal performance the Range Hood must be installed 24" - 36" in height from the cooktop. (Fig. 2)
4. Electrical Requirements: Rated Voltage and Frequency:) 110-120V~ 60Hz. Motor Input Power: 65W

**WARNING**

Sufficient air is needed for proper combustion and exhausting of gases through the chimney of fuel burning equipment to prevent back- drafting. Follow the cooking equipment manufacturers guideline and safety standards such as those published by the National Fire Protection Association (NFPA), the American Society for Heating, Refrigeration and Air Conditioning Engineers (ASHRAE), and local code. When cutting or drilling into wall or ceiling, do not damage electrical wiring and other hidden utilities. Ducted systems must always be vented outdoors.

**Fig. 1**

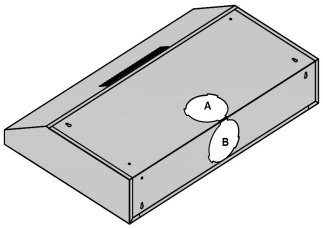


**Fig. 2**

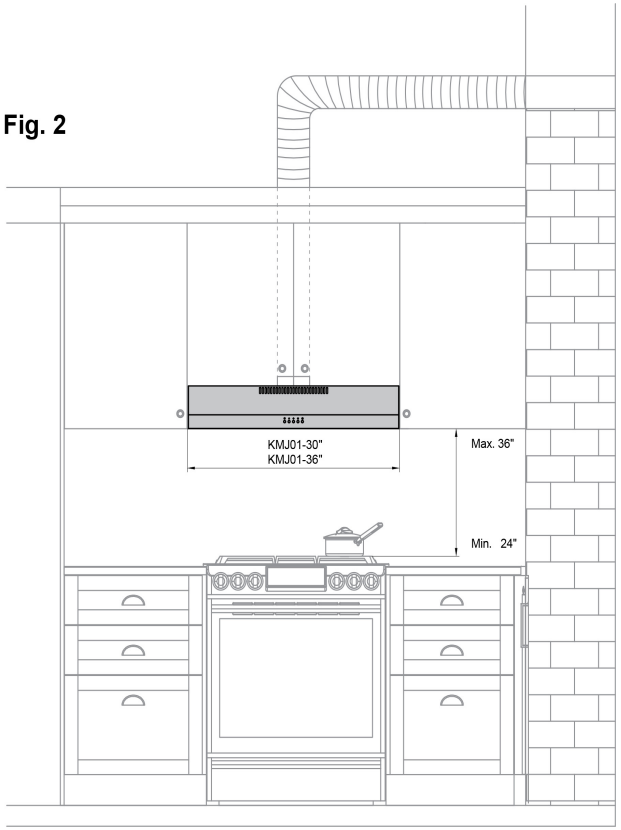

# PRE-INSTALLATION PROCEDURES

• Please read the instructions carefully. Unpack the Range Hood and check that all functions are working before installing.
• Ensure that the voltage (V) and the frequency (Hz) indicated on the sticker match the voltage and frequency at the installation site.
• Check that the area behind the installation surface to be drilled is clear of any electrical cables or pipes, etc.
• The stainless steel surfaces of the Range Hood are very easily damaged during installation if scratched or bumped by tools. Please take care to protect the surfaces during installation.
• Protect the cook top surface below with cardboard, or the like, to prevent damage occurring during installation.
• The manufacturer shall not be held liable for failure to observe all safety regulations.

**IMPORTANT READ BEFORE INSTALLATION**

You will need to set the Range Hood mode to either Ducted or Recirculating.
1. Remove Aluminum Filters
2. Locate Knob Settings located under the Motor **(Fig. 1)**
3. Unlock the Settings Knob by unscrewing and setting to Ducted or Recirculating mode.
4. Lock the Knob into place by replacing the screw from **Step 3**.

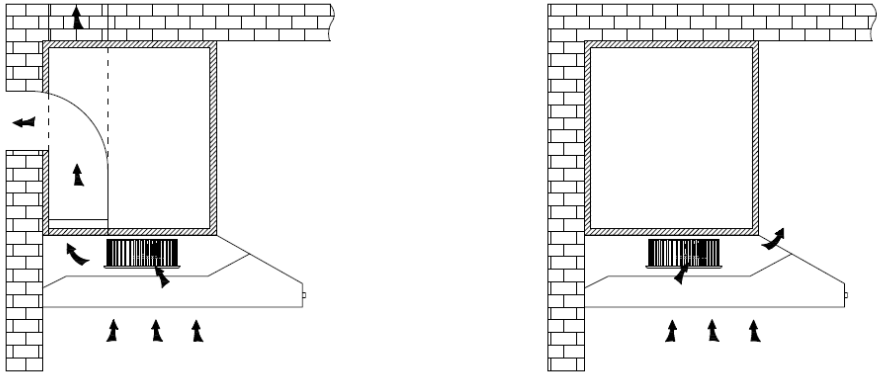

Fig.1

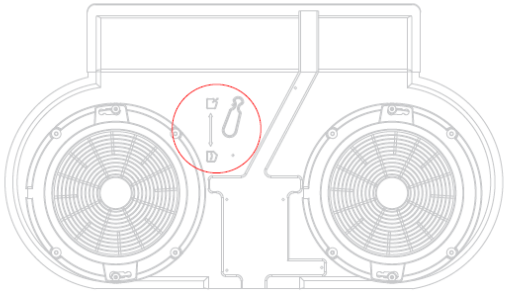

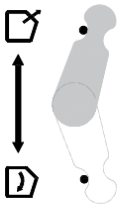

**Ducted Mode: Turn the knob to this setting for Ducted Installation.**

**Recirculating Mode: Turn the knob to this setting for a Recirulating Installation.**



# INSTALLATION INSTRUCTIONS

***CAUTION:*** *HOOD MAY HAVE VERY SHARP EDGES; PLEASE WEAR PROTECTIVE GLOVES WHENEVER IT IS NECESSARY TO REMOVE ANY PARTS FOR INSTALLING, CLEANING OR SERVICING.*

## Cabinet Installation Method

1. For ***Ducted*** installation drill a 130mm diameter hole into the cabinet and four 3.5mm diameter holes as pictured below picture.

   For ***Ductless*** installation ***do not*** drill the 130mm diameter hole in the cabinet. Drill only the four 3.5mm diameter holes as pictured below.

2. Use the 4 screws to mount the Range Hood to the cabinet. Check that your mounting screws are in the correct place by temporarily fitting the Range in place. If correct, lock into position by pushing in the Range Hood.

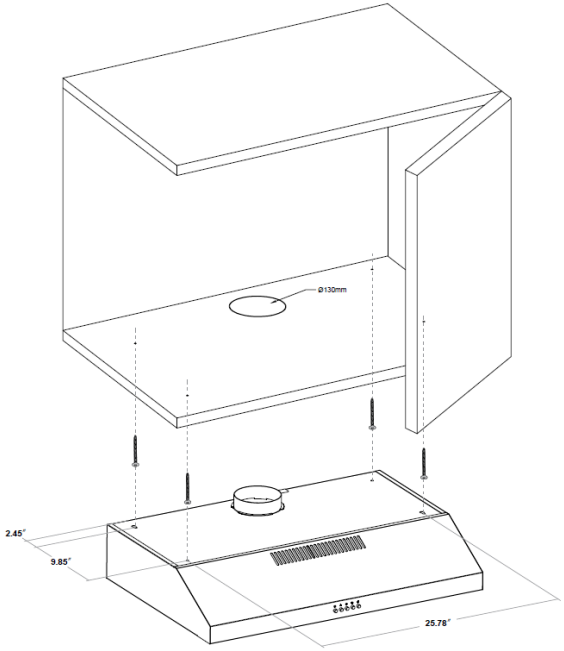

# INSTALLATION INSTRUCTIONS

***CAUTION:*** *HOOD MAY HAVE VERY SHARP EDGES; PLEASE WEAR PROTECTIVE GLOVES WHENEVER IT IS NECESSARY TO REMOVE ANY PARTS FOR INSTALLING, CLEANING OR SERVICING.*

## Wall Mount Installation Method

1. **A.** Find the 4 mounting holes in the back of the range hood. Mark their locations at the installation location with a pencil or marker.
   **B.** Drill 5/16 (8mm) hole at each of the marked locations.
   **C.** Insert anchors along with screws into each drilled hole. Firmly tighten the screw into place.
   **D.** Hang your Range Hood into place by aligning the screws with the 4 mounting holes in the back of the range hood. Lock into place by sliding down the range hood.

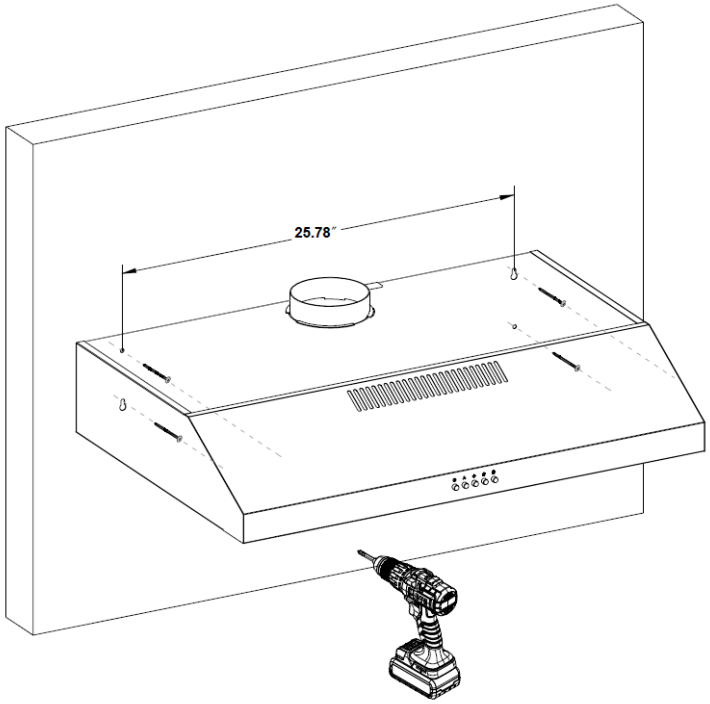




# RECIRCULATING CHARCOAL FILTERS

**Skip this page if you are installing a Ducted Range Hood.**
**Charcoal Filters are only included with Ductless Models.**

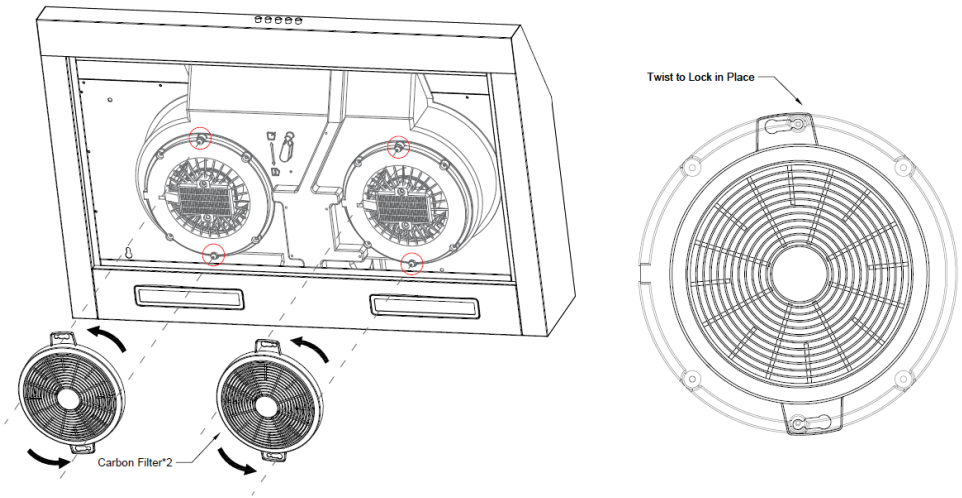


**1.)** Remove the aluminum filters.
**2.)** The charcoal filter is installed at the end of the motor.Align the upper and lower holes , twist the carbon filter Counterclockwise to lock into place.
**3.)** To replace the carbon filter, reverse the process and repeat.

**NOTE:** The carbon filter cannot be washed and reused and must be replaced every 4-6 months, depending on use.

# OPERATING INSTRUCTIONS

**3-Speed Mechanical Control**

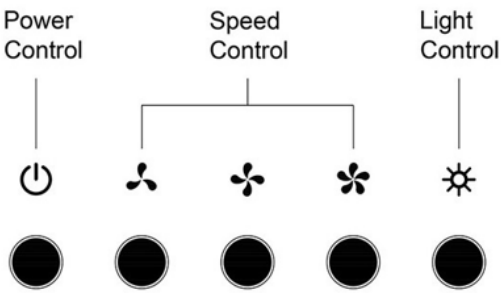


Note: For best results, turn fan on prior to any preparation or cooking and keep fans running while cooking. Adjust speed as needed.

**Button Control**

- ⏻ = Turns the range hood OFF.
- = Lowest fan speed (QuietMode)
- = Middle fan speed (Low)
- = Highest fan speed (High)
- ☼ = Turns the lights ON/OFF

**Power Control**

To turn the hood off, press the ⏻ button once while it is ON.

**Speed Control**

Press the speed buttons ( , and ) to increase/decrease the fan speed level.

**Light Control**

Press the light button to turn ON/OFF the lights



# MAINTENANCE

**CAUTION:** NEVER PUT YOUR HAND INSIDE OF THE UNIT WHILE ITS OPERATING. FOR THE BEST PERFORMANCE CLEAN YOUR RANGE HOOD REGULARLY.

**CLEANING**

1. Use only mild soap or cleaning solutions to clean the hoods' outer surface. Dry surfaces using a soft cloth.
2. Stainless Steel cleaner may be used on the external surface.
3. Clean the Range Hood assembly 3 to 6 months depending on use.
4. **DO NOT** clean the motor or electrical components with water or any other liquid.

## Replacing LED 2W 120V Light Fixture

1. Remove the aluminum filters
2. Make sure the range hood is unplugged or turn OFF breaker and the lights are cool to touch.
3. Place a flat-head screwdriver between light housing and hood body.
4. Gently pry up the light housing and search for the metal clip.
5. Apply force to the metal clip and pull out the light fixture.
6. Disconnect the power cable and discard the old light fixture.
7. Reverse the steps to install a new LED light fixture.
8. Reinstall the aluminum filters.
9. Turn ON breaker and range hood to test for operation.

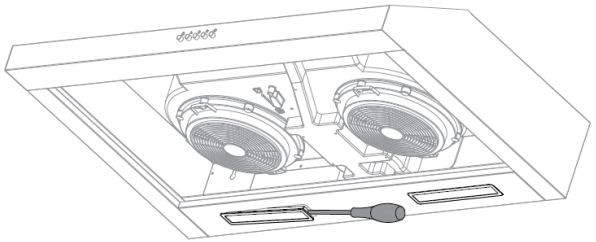

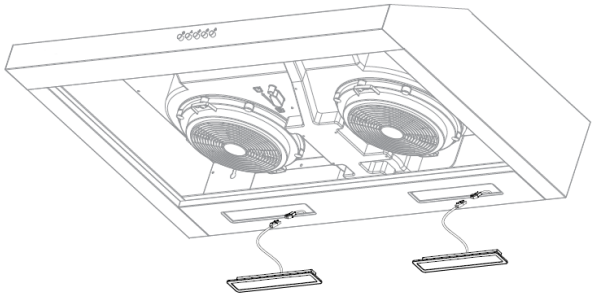

# TROUBLESHOOTING

**CAUTION:** ALWAYS UNPLUG UNIT FROM POWER BEFORE SERVICING

| PROBLEM | SOLUTION | TOOLS |
|---|---|---|
| My range hood is noisy. | A. Check inside the range hood for any loose debris and remove. | Phillips Screwdriver |
| My range hood has poor performance. | A. The range hood and cook top are too far away from each other. **Optimal distance is 24" to 36"**<br><br>B. There are too many open windows or doors in the area. Close some doors or windows.<br><br>C. The motor performance has decreased due to wear. Replace motor.<br><br>D. Check and make sure the tape holding down the damper flaps at the vent hole are removed before use. | Phillips Screwdriver |
| My range hood shakes. | A. The installation is not secure. Check again and make sure the installation hardware is securely mounted.<br><br>B. The fan is broken or not balanced. Realign or replace fan.<br><br>C. The motor is loose. Check and make sure the motor is solidly mounted to the unit. | Phillips Screwdriver |
| The motor no longer runs. | A. Replace control panel or circuit board.<br><br>B. Replace with new motor assembly. | Phillips Screwdriver |
| Light bulb went out. | A. Replace with a new LED Bulb 2watt max. | Phillips Screwdriver |



# MEASUREMENNTS & DIAGRAMS

***All inch measurements are converted from millimeters.Inch measurements are estimated.
***All measurements in ( ) are millimeters.

**MODEL NO. : KMJ01-30″**
**KMJ01-36″**

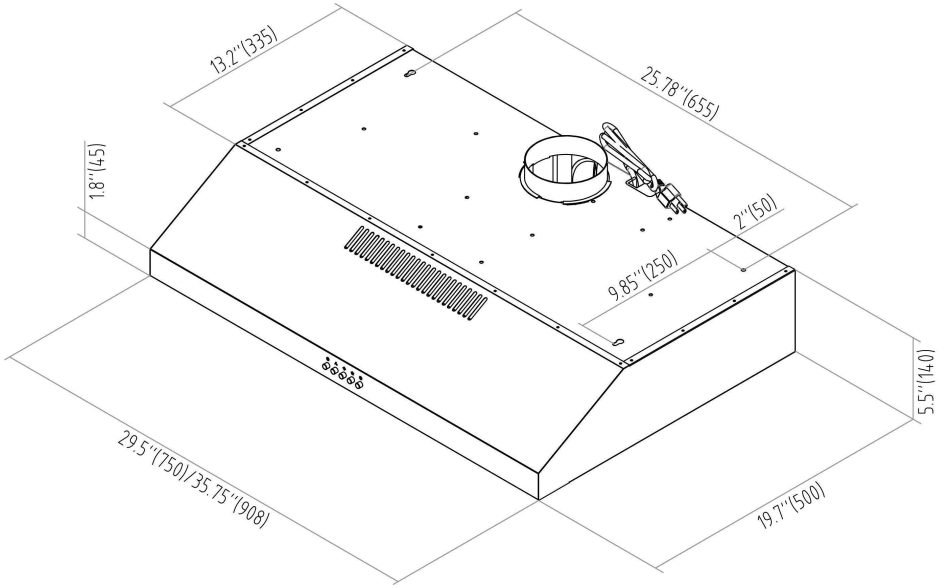

# WARRANTY AND SERVICE

For full warranty details on this product please visit:

https://itylza.com

TO RECEIVE WARRANTY SERVICE, YOUR PRODUCT MUST BE REGISTERED. TO REGISTER, VISIT:

**https://itylza.com**

**Correct Disposal of this product:**

This marking indicates that this appliance should not be disposed with other household wastes. To prevent possible harm to the environment or human health from uncontrolled waste disposal, recycle it responsibly to promote the sustainable reuse of material resources.