Owner Manual

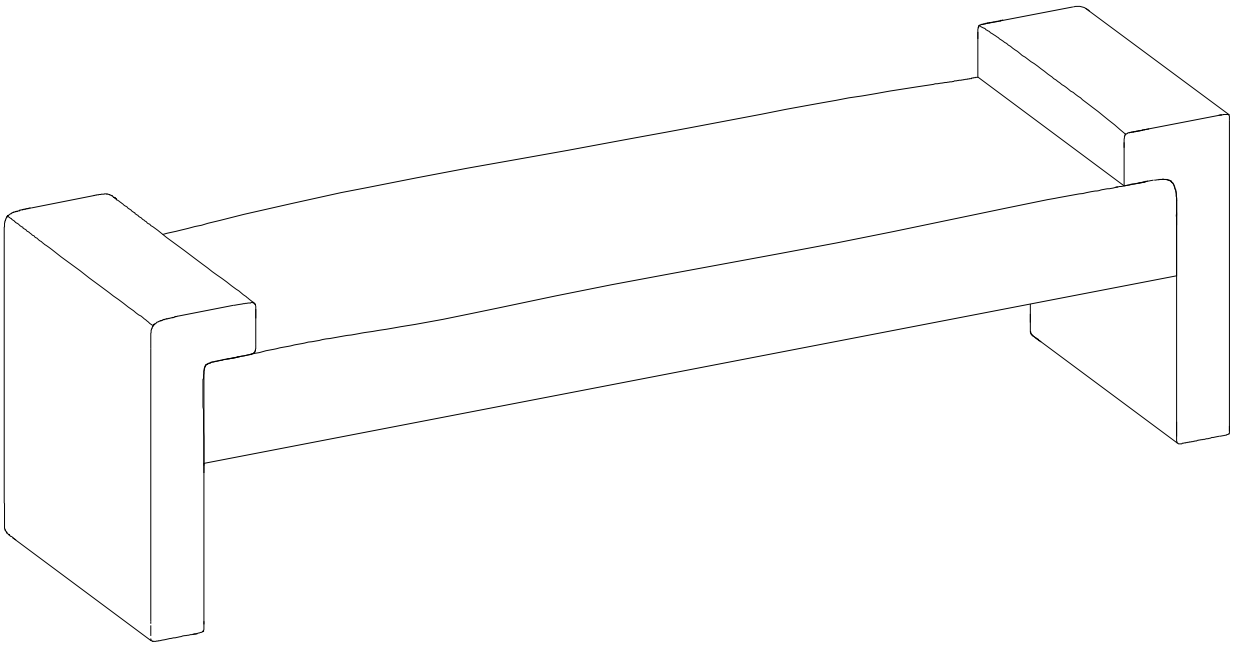

Weight Capacity

300 LBS

Installation:
15 minutes.

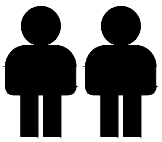

Two Person

Thank You For Choosing Our Furniture

If you have any questions or concerns, don't hesitate to reach out to us.

NOTE:
This brochure contains IMPORTANT safety info. Please read and keep it for future reference.

MAINTENANCE AND WARNINGS

Before You Start

Please follow the steps below:

- Check the packaging for any damage, deformation, or water stains. If there is significant damage, please contact us promptly.
- Unpack the box and compare the contents with the parts list and hardware list to ensure all components and accessories are present and complete.
- Please read the installation instructions carefully to understand the installation steps and precautions to ensure proper installation.
- Clean the installation area in advance and ensure the ground is level and there is enough space to avoid damaging the furniture or making installation difficult.
- Lay a protective mat on the ground to prevent scratching the floor during installation.

After-Sales Service

- If you encounter any issues or need technical support during use, please contact our after-sales team.We offer long-term maintenance and warranty services.

Precautions

⚠ This product is for indoor use only. Do not expose it to outdoor elements or high-humidity environments.

⚠ Keep the product away from high heat or open flames to prevent fire hazards.

⚠ Do not allow children to climb on the product, as this may cause tipping and result in personal injury.

Safety Warnings

⚠ If you notice any loose or damaged parts,stop using the product immediately and contact customer service.

⚠ Do not attempt to disassemble or replace any components yourself,as this may affect the stability and safety of the product.

Daily Maintenance

- Regularly clean the surface with a soft cloth to prevent dust accumulation.
- Do not use cleaning agents containing acids,alkalis,or corrosive substances, as they may damage the surface. It is recommended to use neutral cleaning agents or specialized furniture cleaners.
- Avoid exposing furniture to humid environments for extended periods. Use a dehumidifier or desiccant during humid weather.
- Avoid direct contact of furniture with water.If water is accidentally spilled, wipe it dry immediately.
- Avoid placing excessively heavy objects on the furniture: ensure the weight is within a reasonable load-bearing range.
- Avoid using sharp or rough items on the furniture surface to prevent scratches, Handle items gently when moving them.

Parts list

A x1 Seat cushion 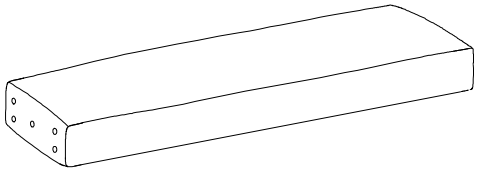	B x1 Left leg 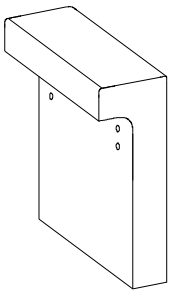
C x1 Right leg 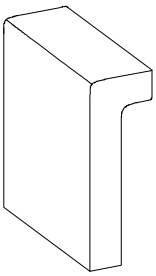	

Hardware List

#1x 10+1 Bolt 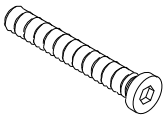 M8x85mm	#2x10+1 Spring washer 	#3x 10+1 Flat washer 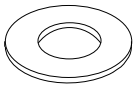
#4x 1 Allen Key 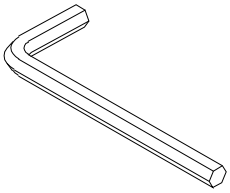 M8		

Step 1

Place A on top of B as shown in the diagram, then unzip the zipper.

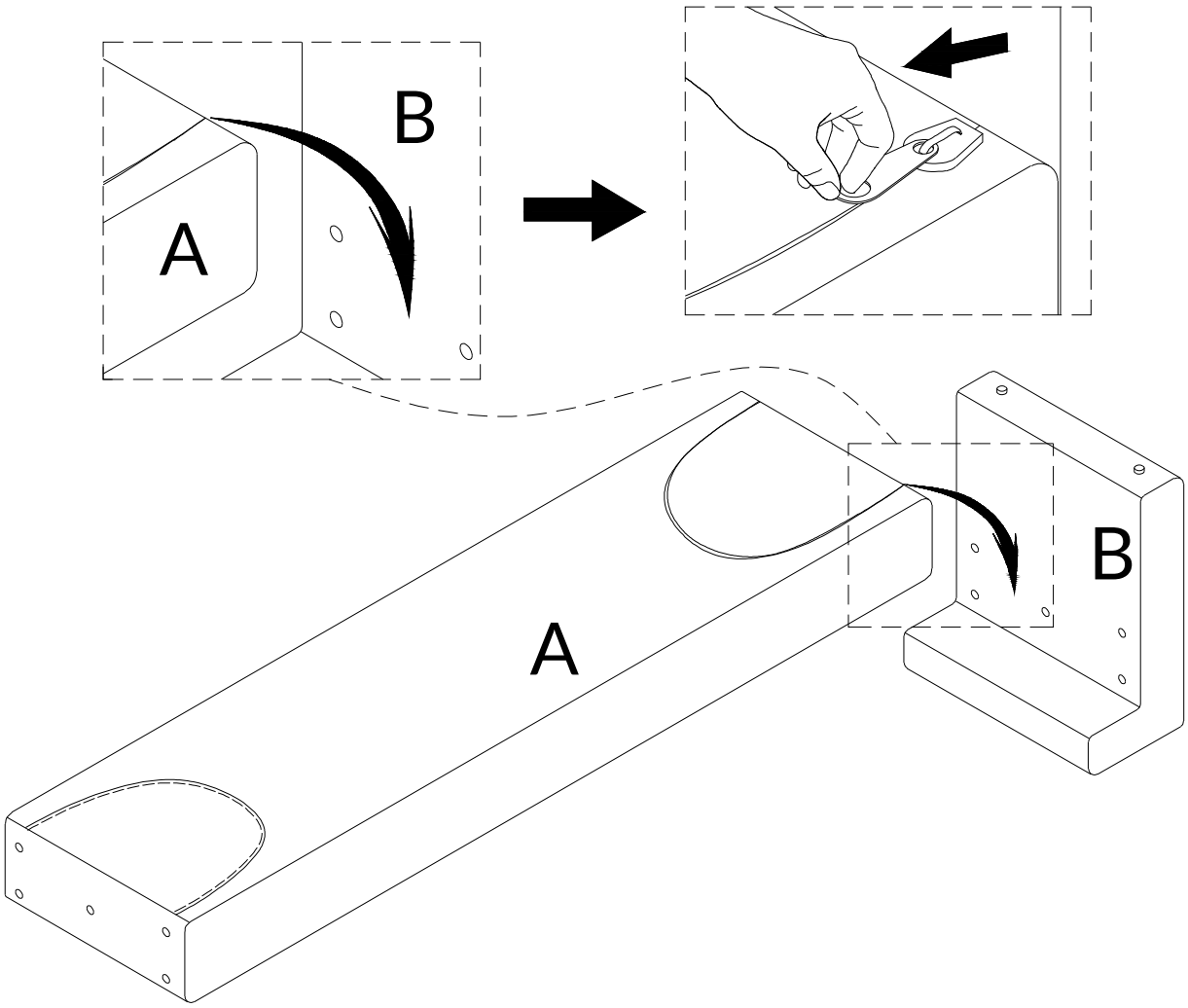

Step 2

Please use one hand to hold down the seat while you lock the screws.

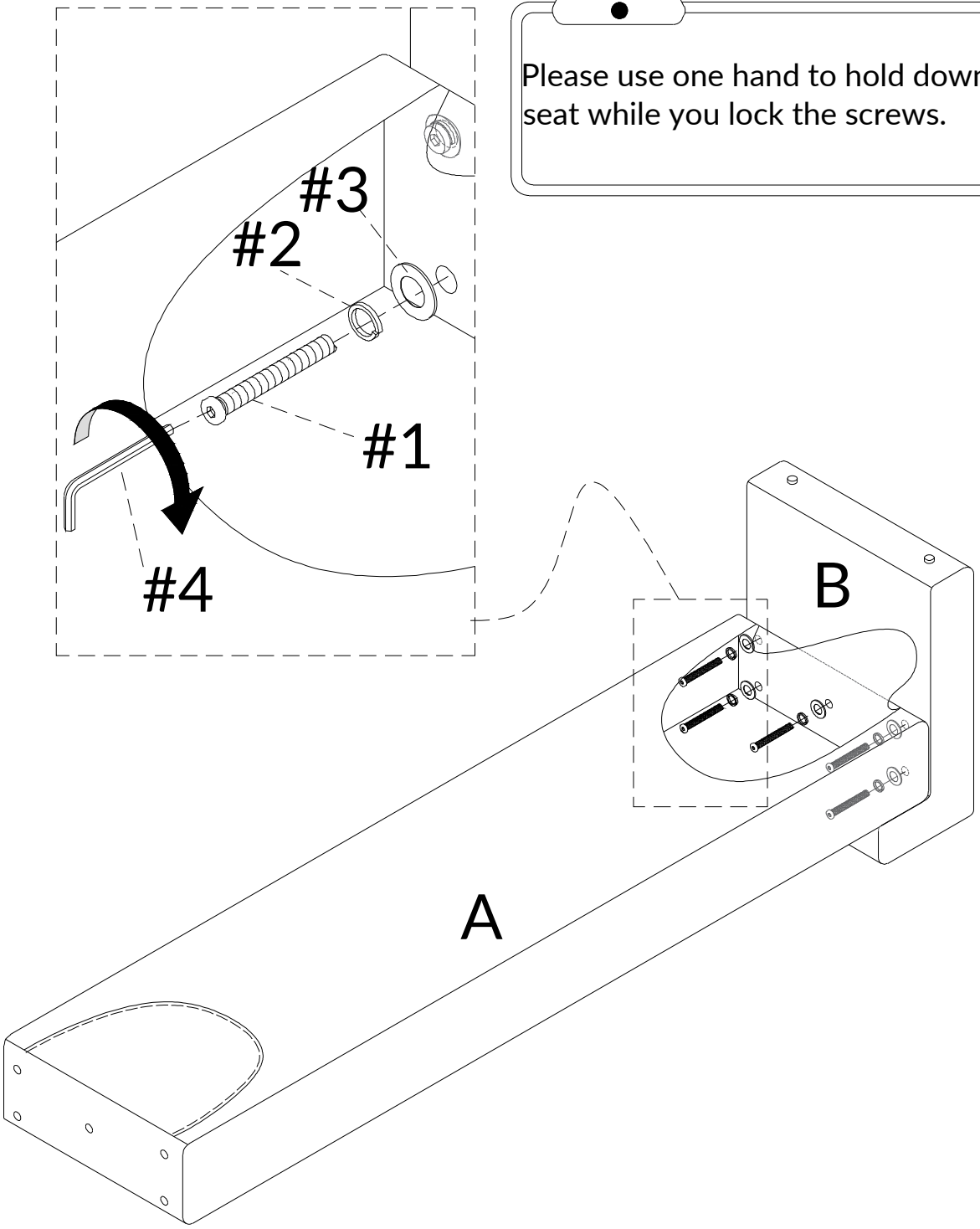

#1x5	#2x5	#3x5	#4x1
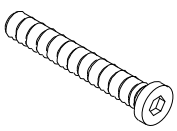		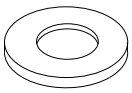	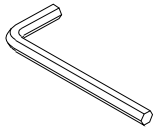

Step 3

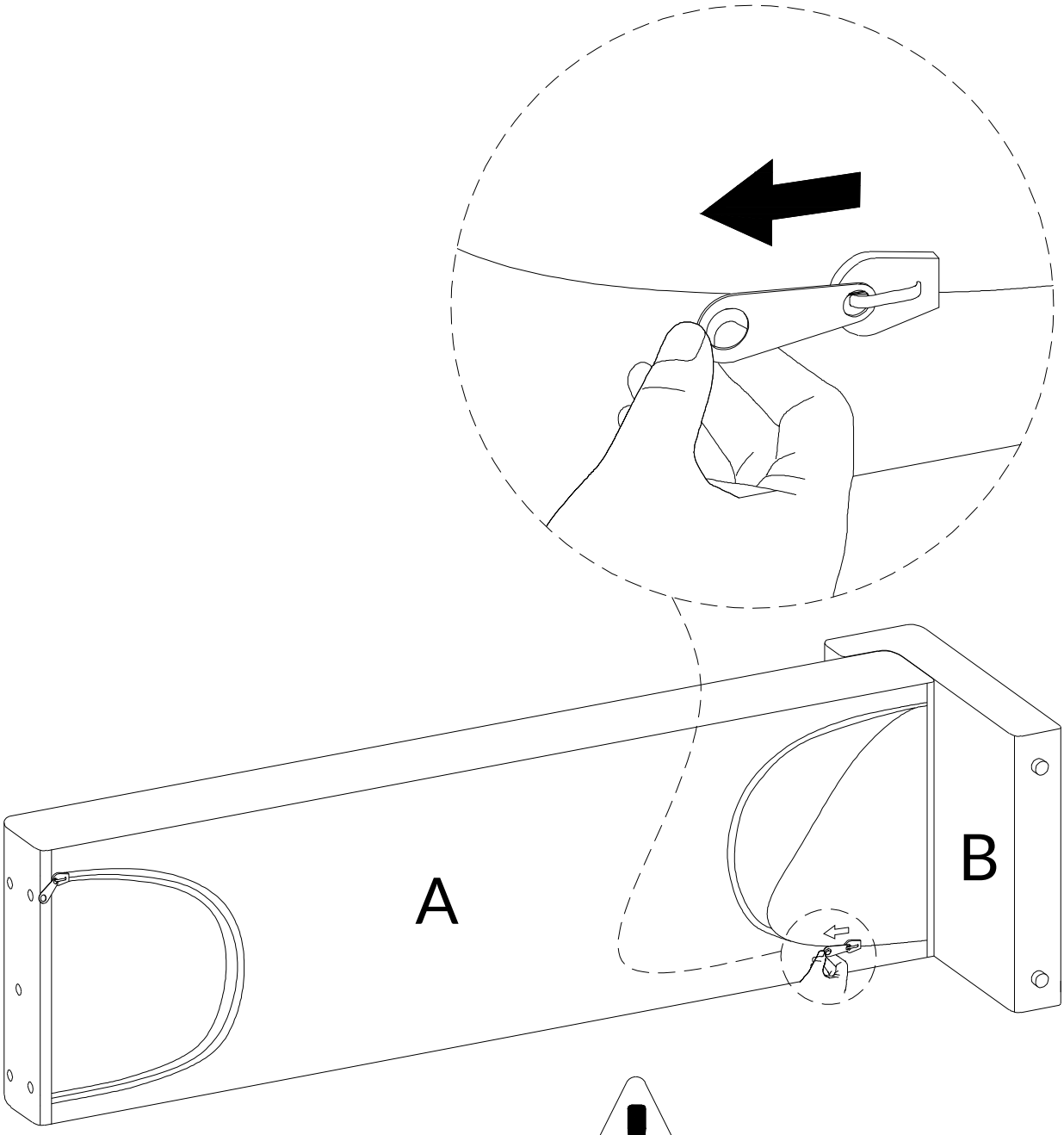

Zip up the side of A that has already been assembled.

Step 4

Place A on top of C, and then unzip the zipper on A.

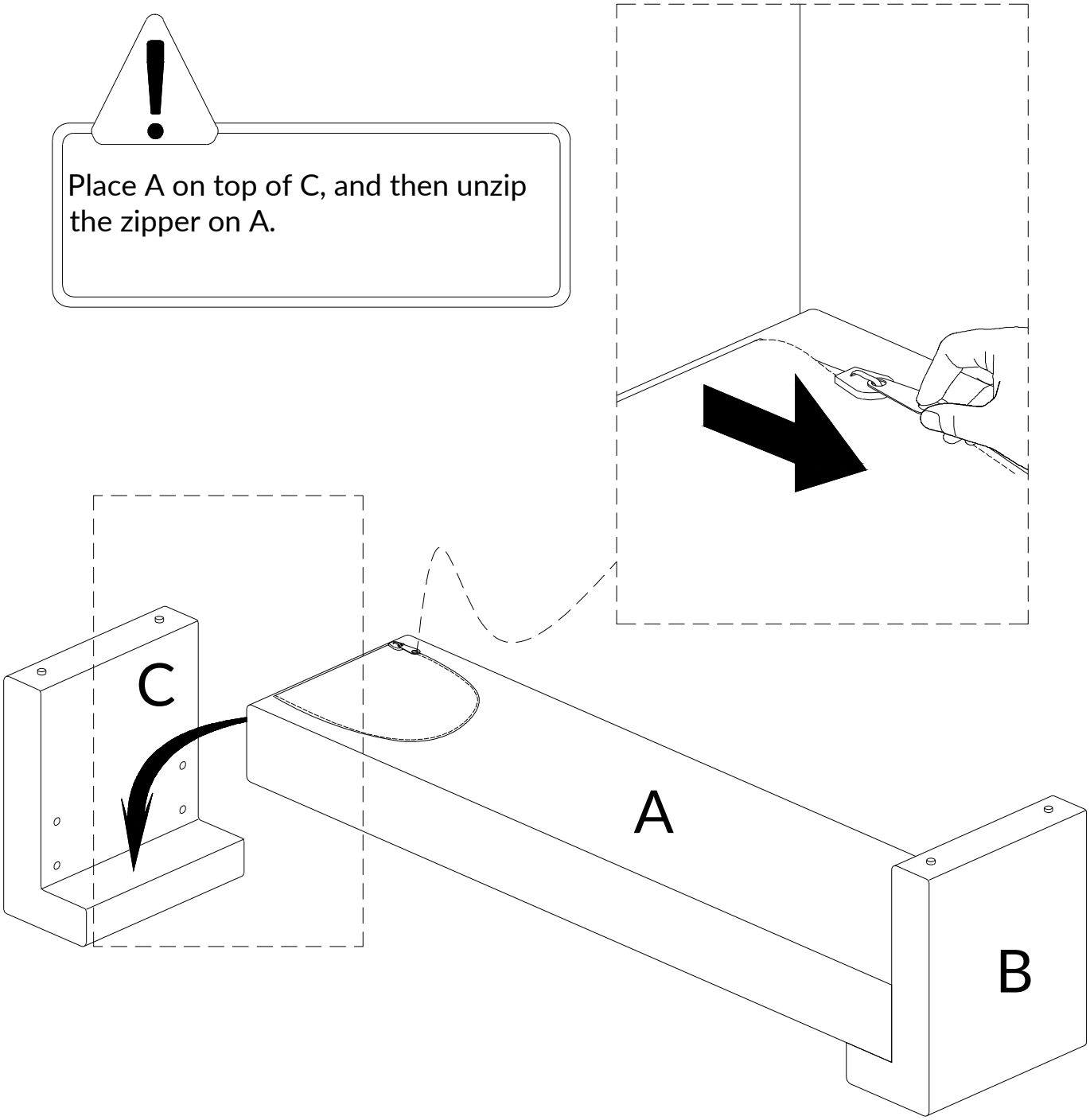

Step 5

Please use one hand to hold down the seat while you lock the screws.

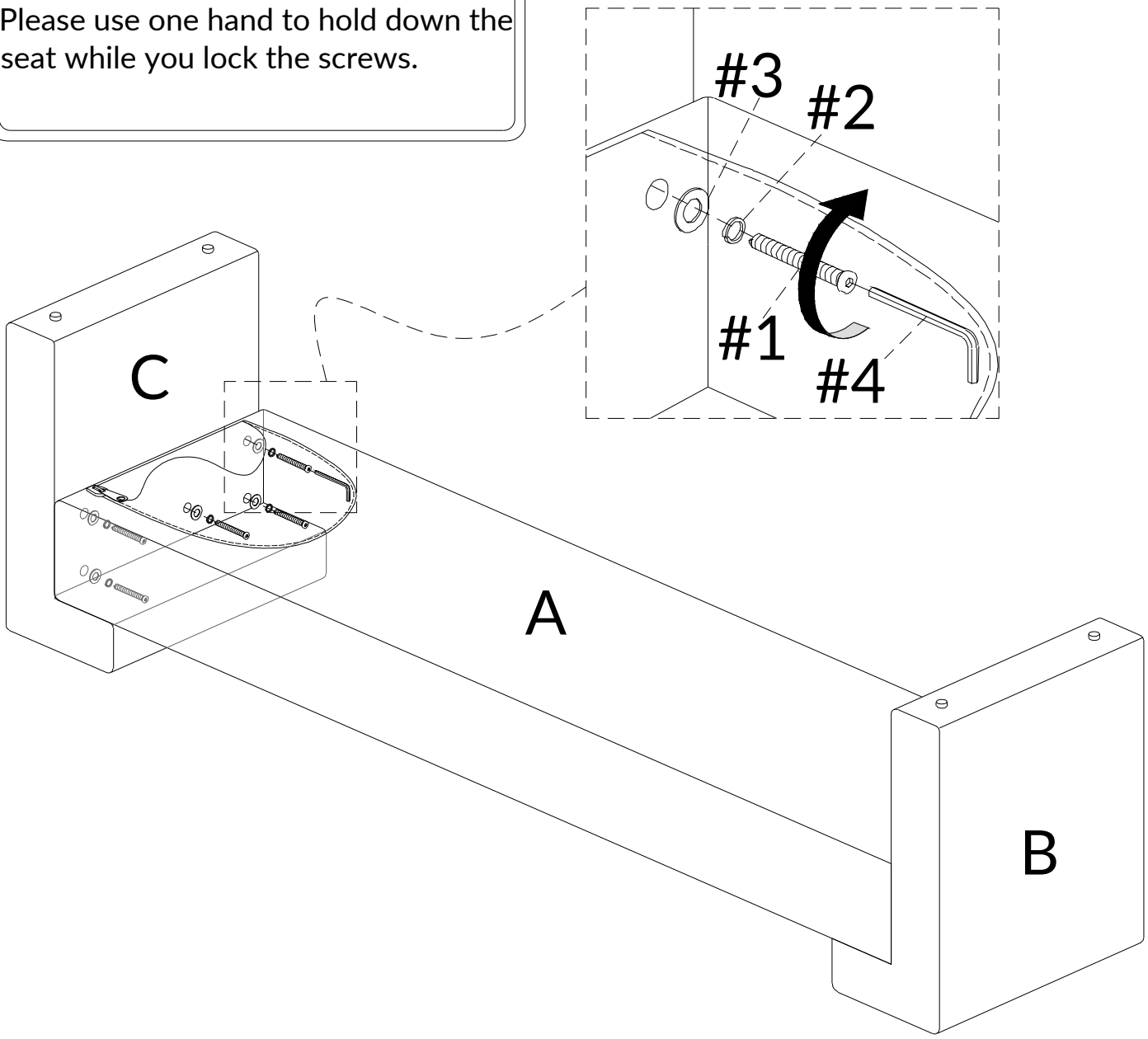

#1x5	#2x5	#3x5	#4x1
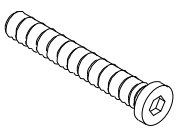		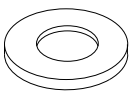	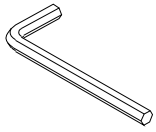

Step 6

After the final assembly, simply zip up the zipper and the installation is complete.

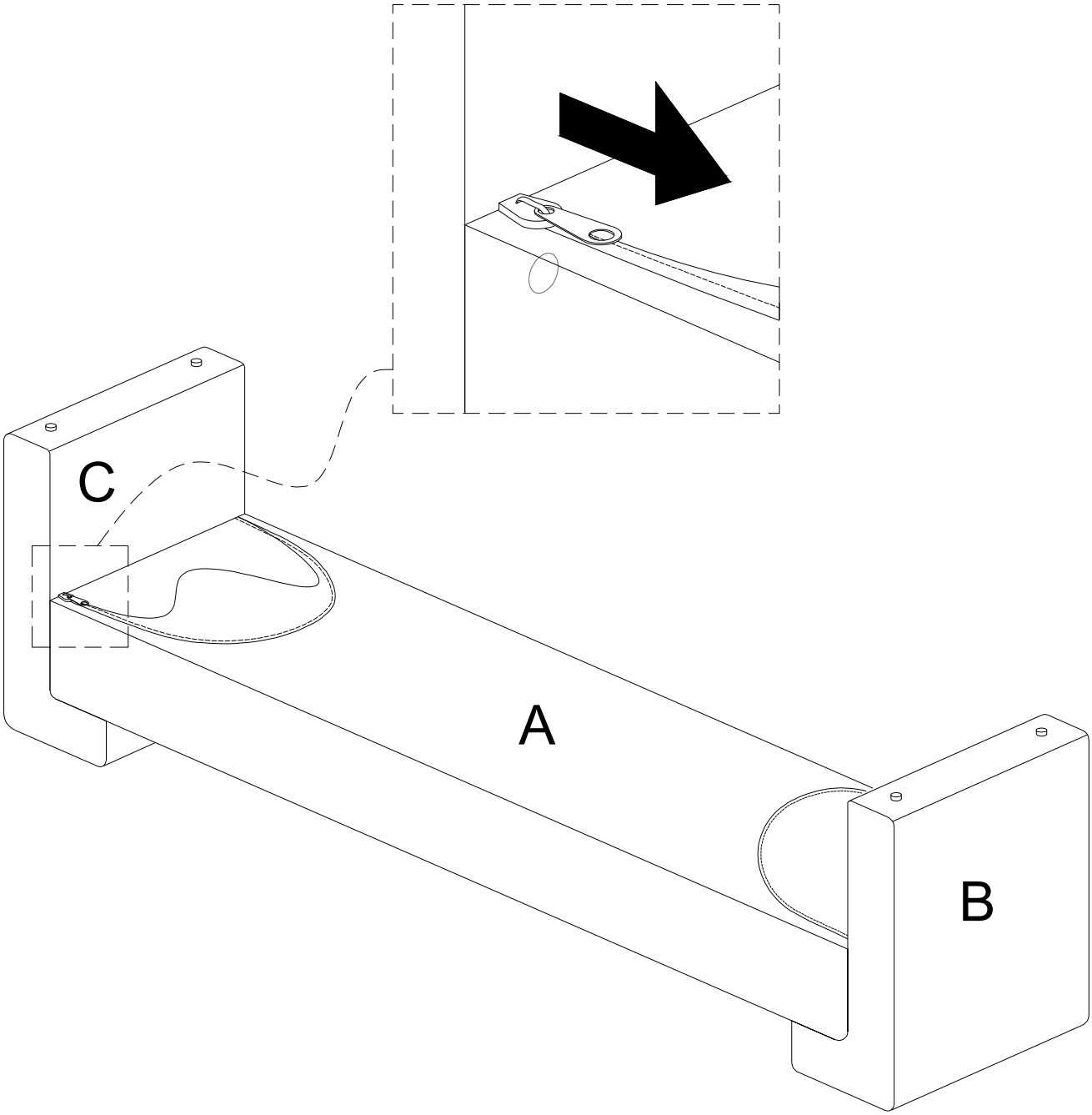

WARRANTY

- We strive to offer quality products, and we also try our best to satisfy every customer who orders from us with products or services as needed.

- Replacement parts can be purchased from our company if available.

- For returns, please check the return policy with the retailer or marketplace where you purchased the item.

We appreciate your purchase.
Brighten your life with our furniture!