Installation Instructions

SKTC-R01 / R02

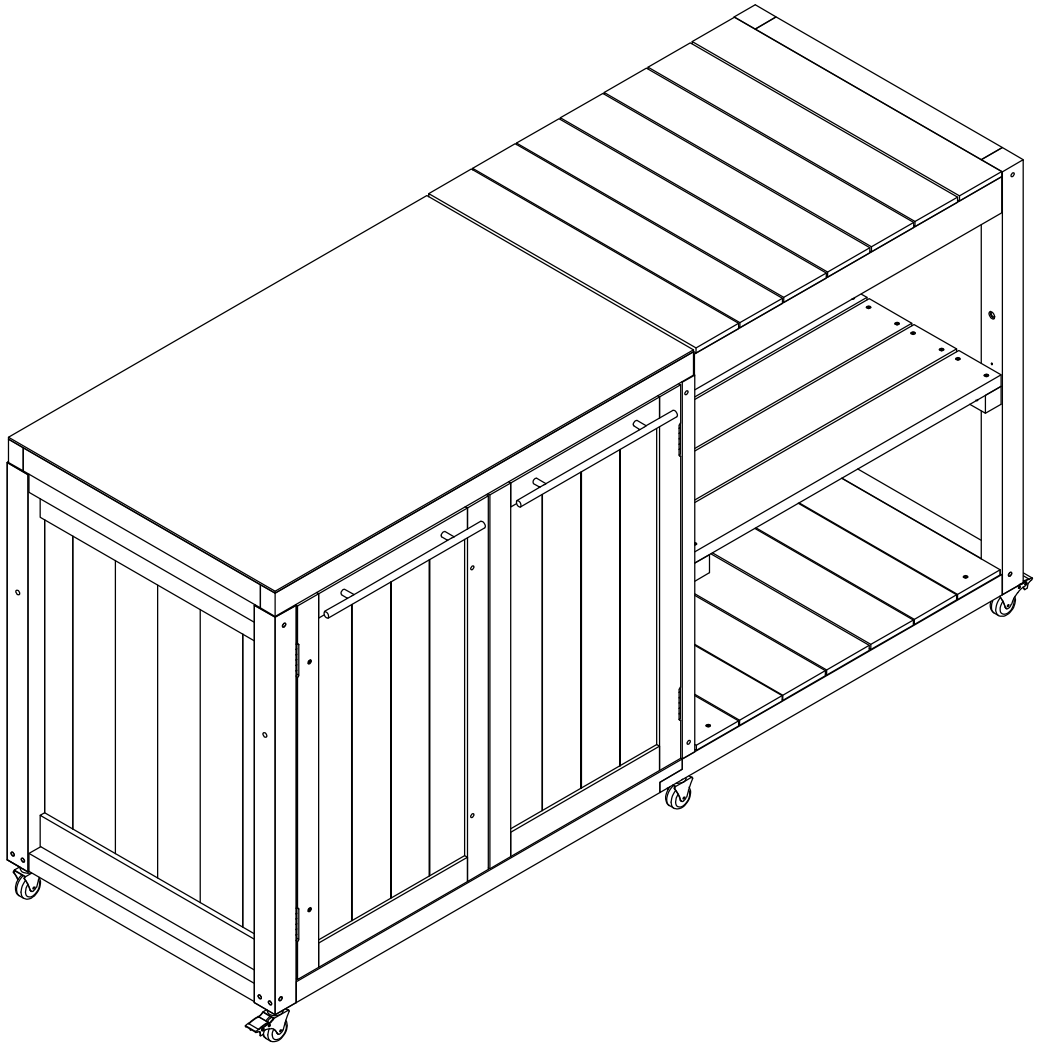

Tools Required for Installation



Icons and their uses you will see throughout this manual

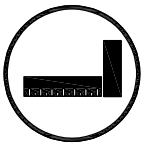

You will need to make sure that your assembly is square before tightening your bolts.

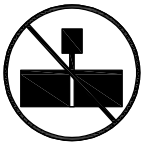

This icon warns you to not over tighten your bolts. This is to prevent structural damage and also splintering your wood.



For proper assembly you will need to ensure that your structure is level before proceeding to the next step.



This icon will show you what dril! attachments are needed. For this example you will need a Phillips head attachment .



Some steps in the assembly process will require an extra set ofhands. Make sure you have a helper available.



This size of the open-end wrench on these icons should correspond to the size of the nut.

Wood Components (Not to Scale)

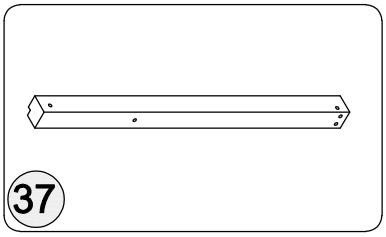

Left front pillar
Qty: 1

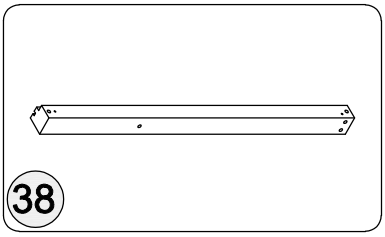

Left rear pillar
Qty: 1

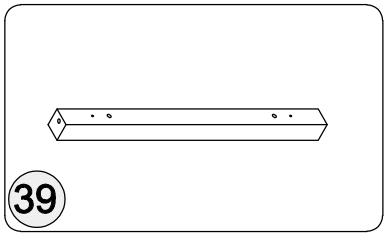

Left top strip
Qty: 1

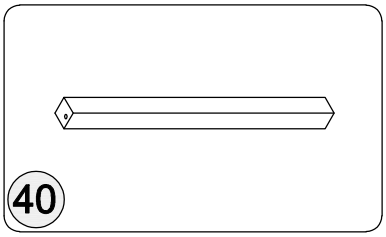

Bottom left bar
Qty: 1

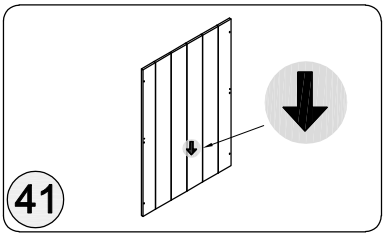

Left core board
Qty: 1

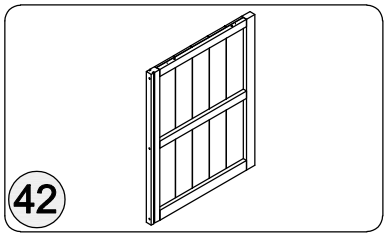

Septal frame
Qty: 1

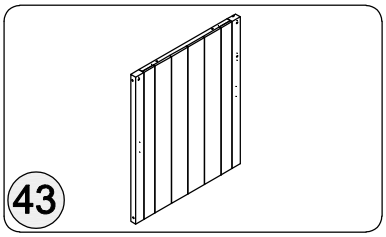

Middle frame
Qty: 1

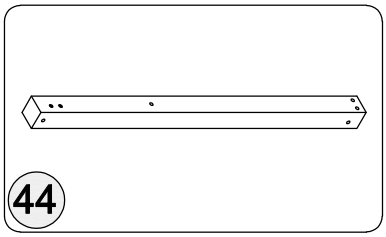

Right front pillar
Qty: 1

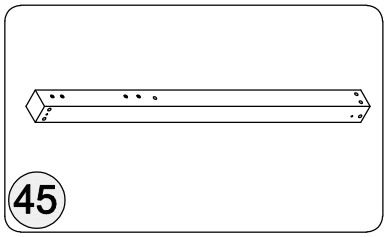

Right rear pillar
Qty: 1

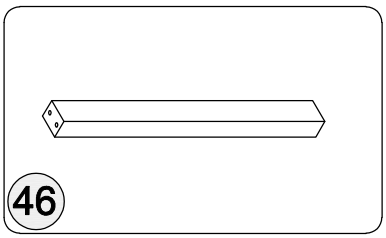

Right top strip
Qty: 1

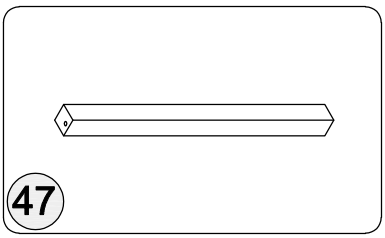

Right bottom bar
Qty: 1

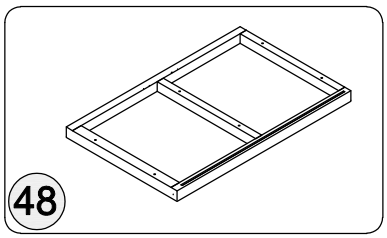

Left panel
Qty: 1

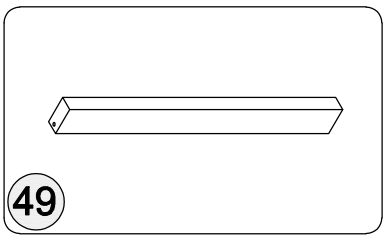

Upper right horizontal bar
Qty: 2

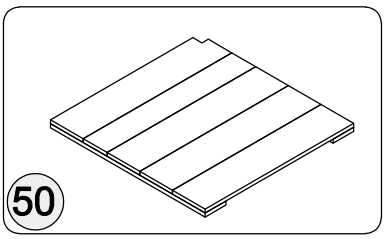

adjustable shelf
Qty: 1

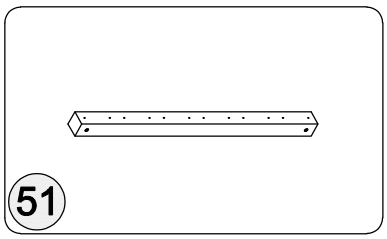

support strip
Qty: 2

Wood Components (Not to Scale)

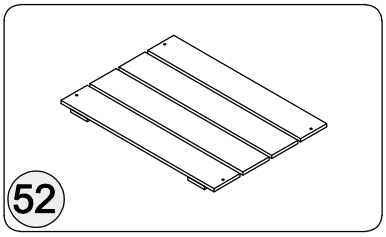

Left floor panel
Qty: 2

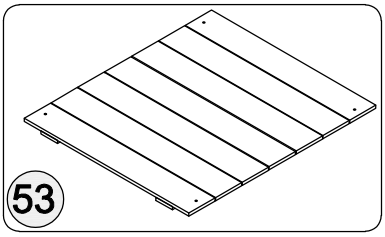

Right floor panel
Qty: 1

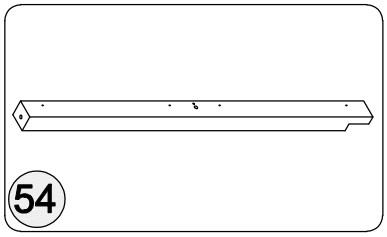

Lower left front bar
Qty: 1

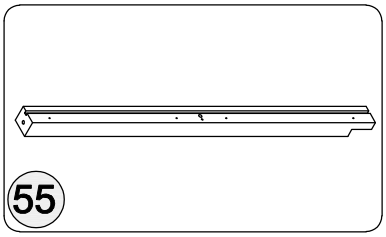

Bottom left back bar
Qty: 1

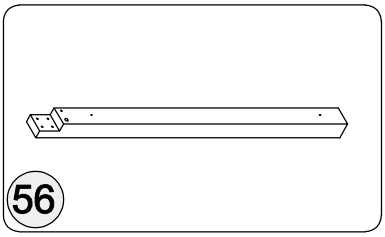

Lower right front bar
Qty: 1

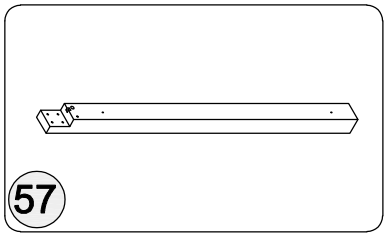

Bottom right back bar
Qty: 1

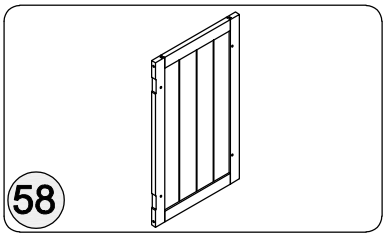

left door panel
Qty: 1

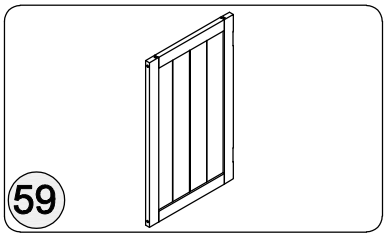

Right door panel
Qty: 1

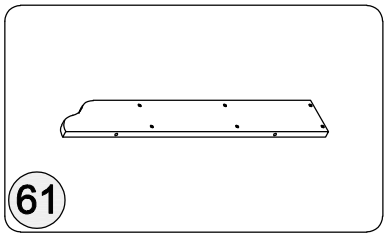

Left hanging board
Qty: 1

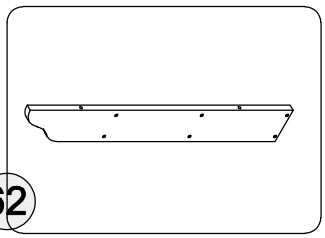

Right hanging board
Qty: 1

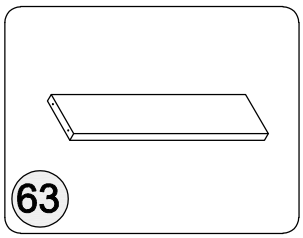

horizontal board
Qty: 3

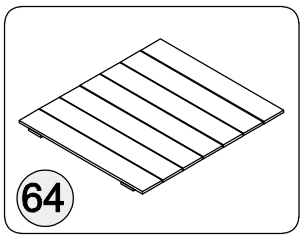

Right panel
Qty: 1

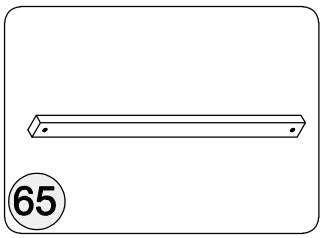

support strip
Qty: 1

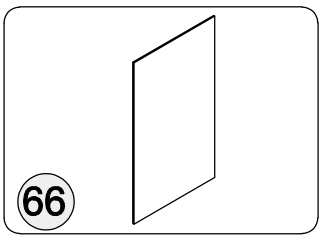

Left backboard
Qty: 1

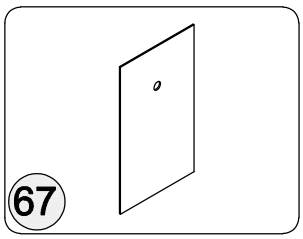

Right backboard
Qty: 1

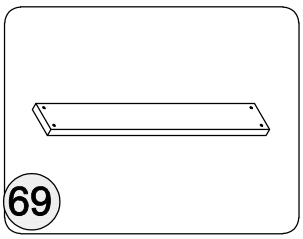

Laminate strip
Qty: 6

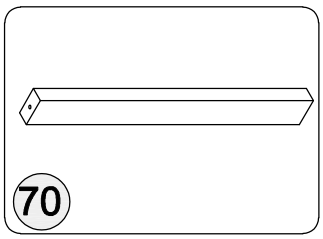

Laminate strip
Qty: 1

Hardware Components

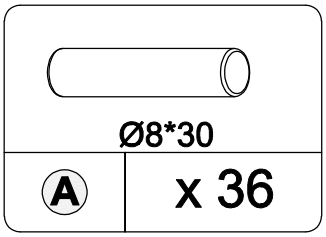

Wooden tenons

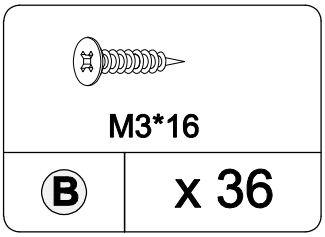

Screw

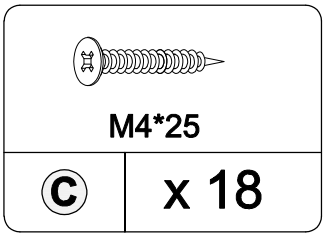

Fixing frame

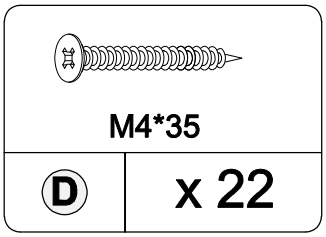

Screw

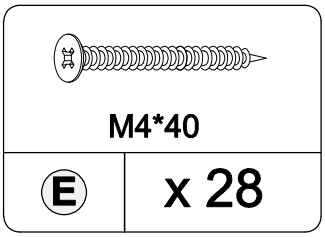

Screw

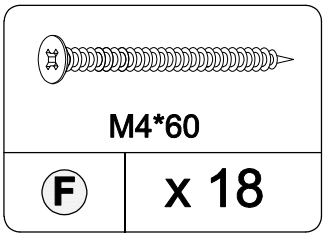

Screw

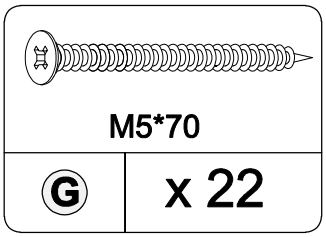

Screw

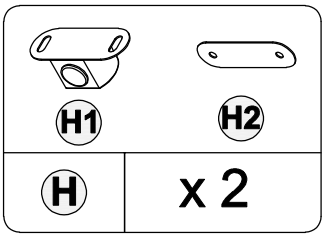

Door stopper

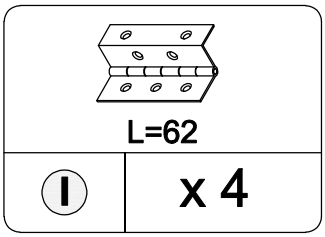

Hinge

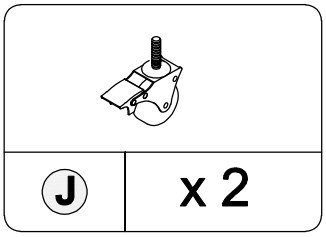

wheel

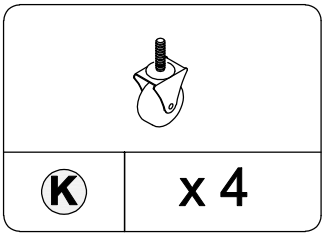

wheel

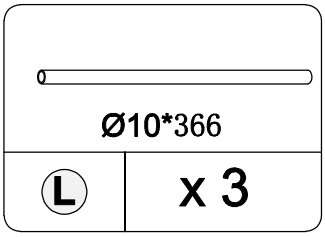

round tube

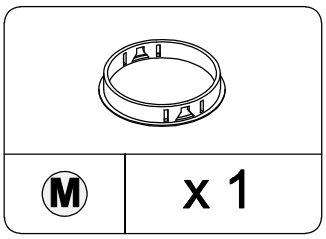

outlet box

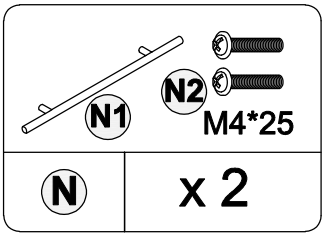

Handle hardware

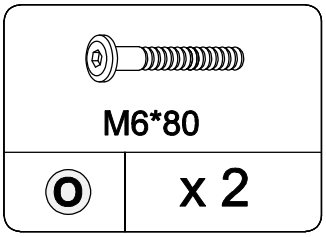

screws

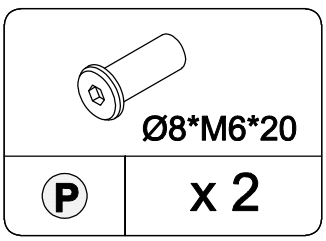

nut

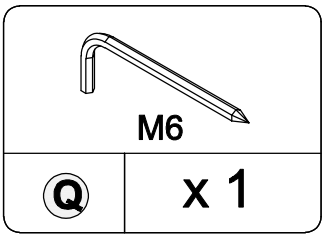

Hex key

Bottom front installation

Step 1

1. First, overlap the gap between component 54 and component 56
2. Install component 56 onto component 54 using hardware D

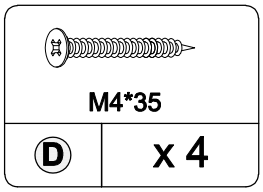

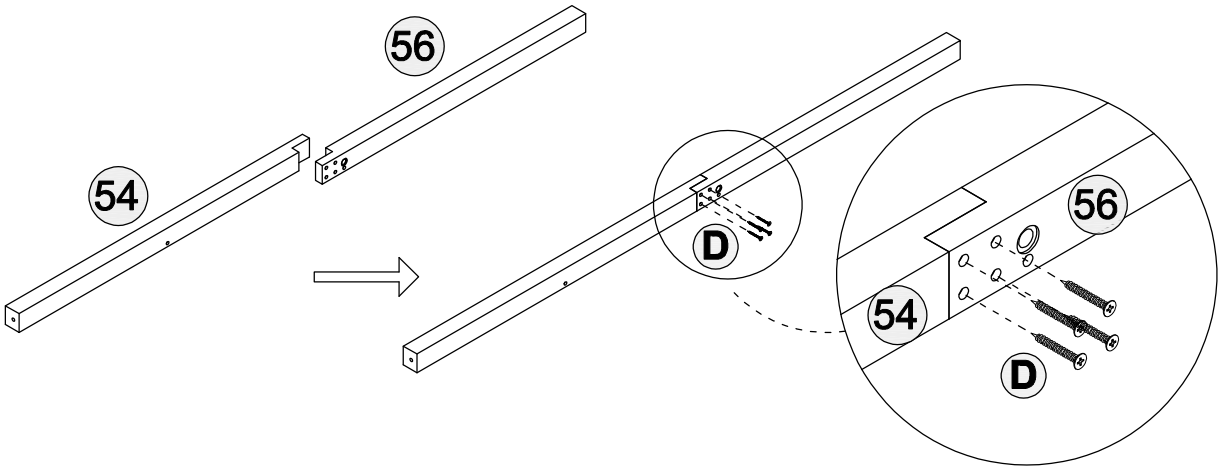

Installation of bottom strip

Step 2

1. First, overlap the gap between component 55 and component 57
2. Install component 57 onto component 55 using hardware D

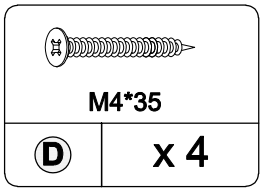

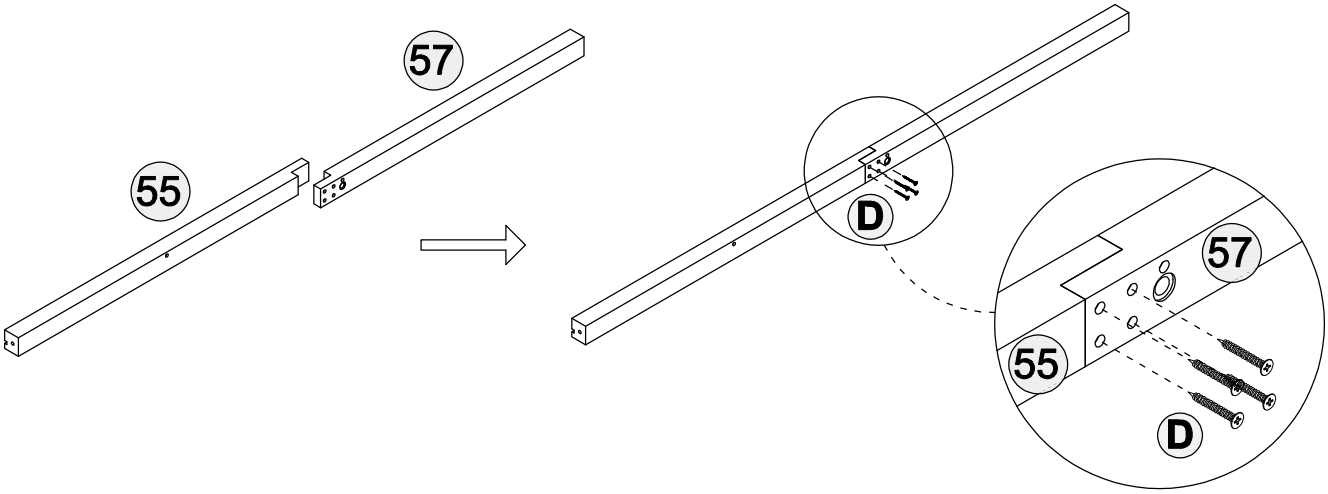

Right side frame installation

Step 3

1. Connect with hardware A first, then install with hardware G

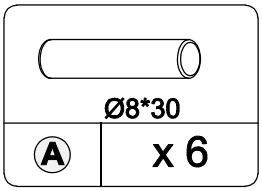

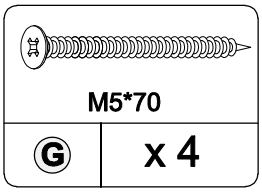

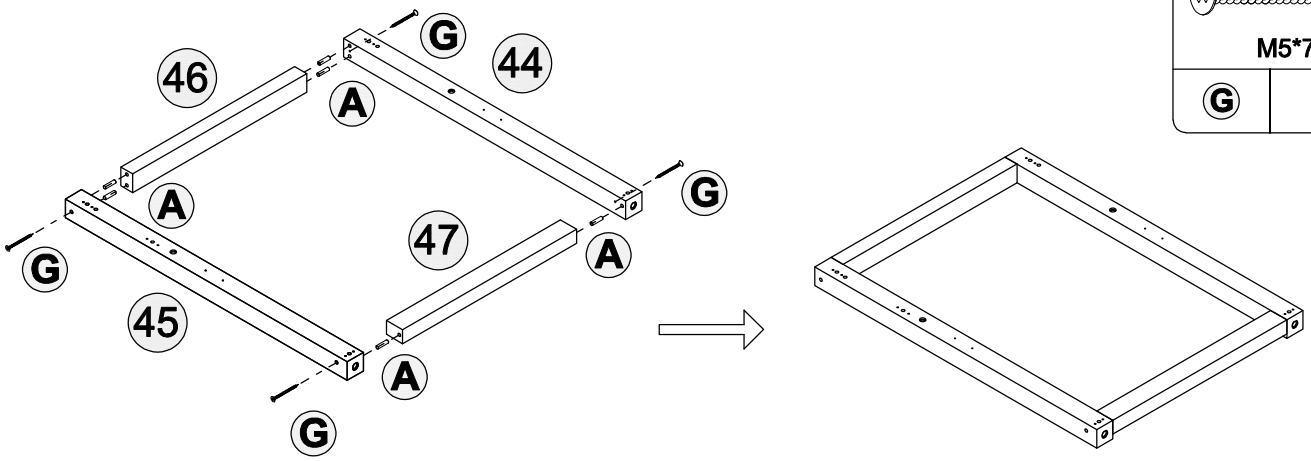

Installation of middle partition

Step 4

1. Connect with hardware A first, then install with hardware F
2. Note that component 55 has a backplate slot

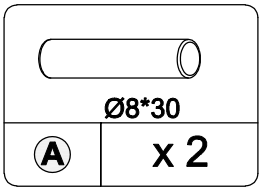

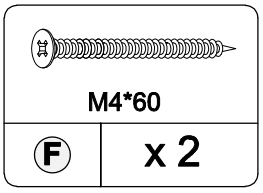

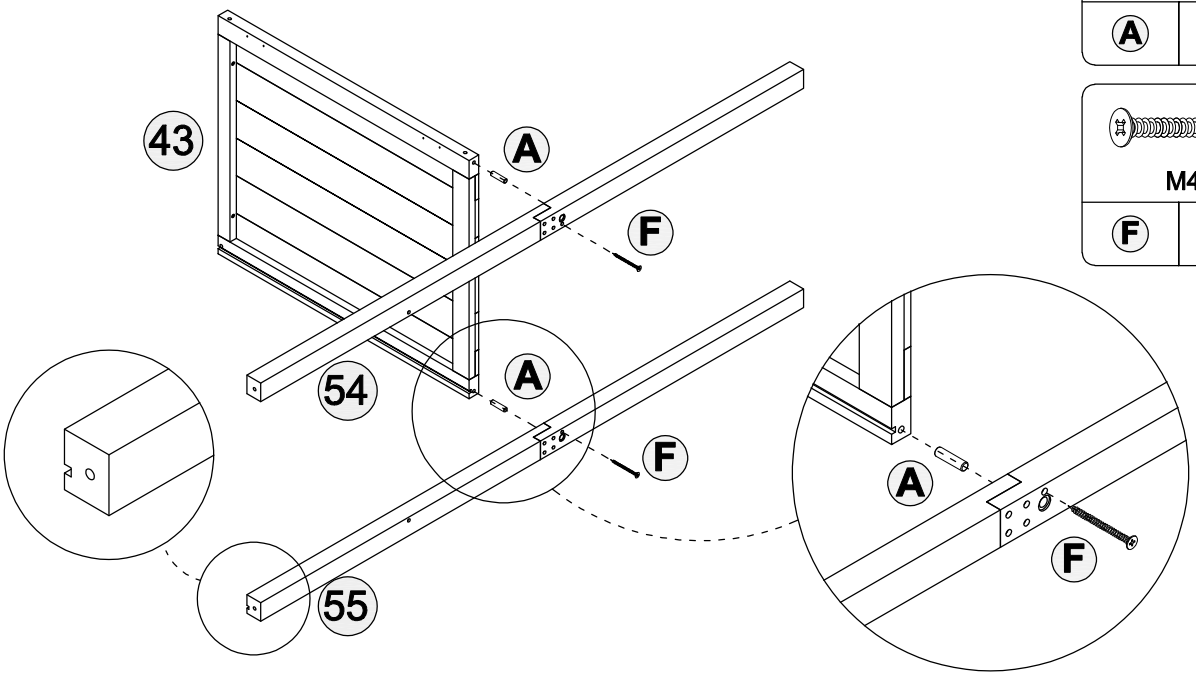

Right side installation

Step 5

1. Connect with hardware A first, then install with hardware hardware F

⚠ 2. The wooden shank hole of panel 49 faces downward

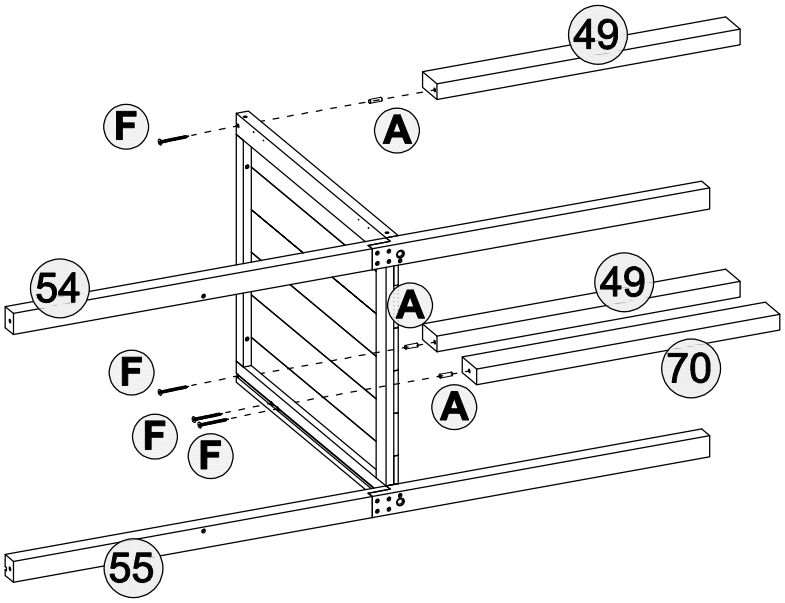

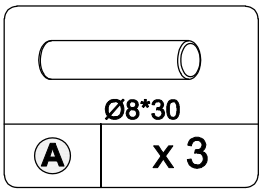

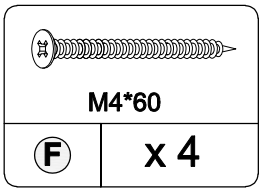

Right side installation

Step 6

1. Connect with hardware A first, then install with hardware hardware G

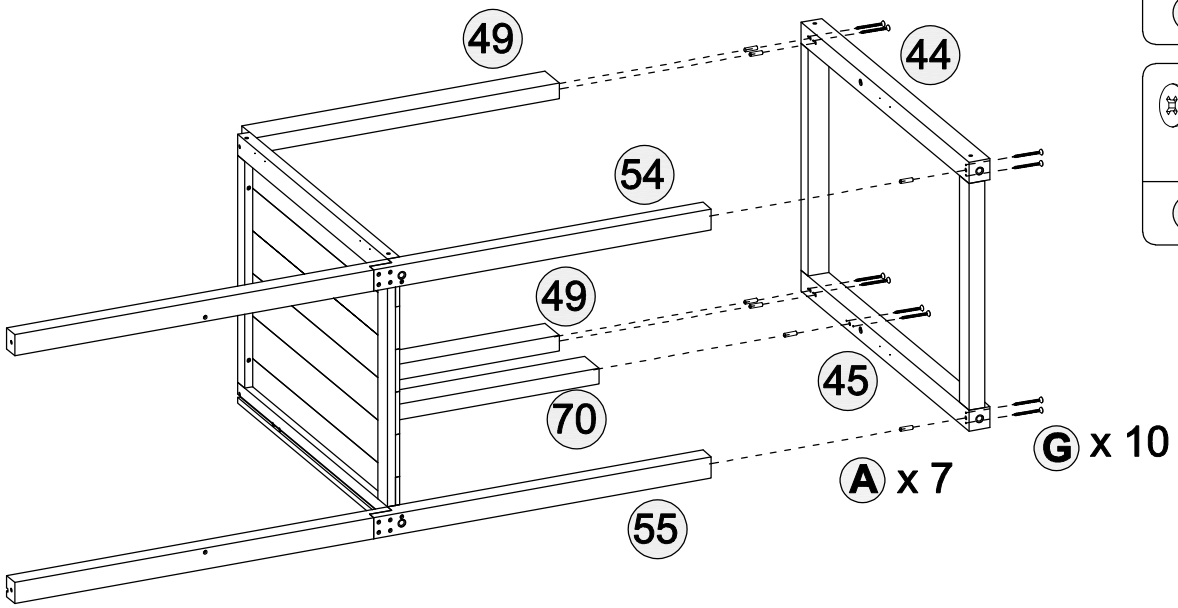

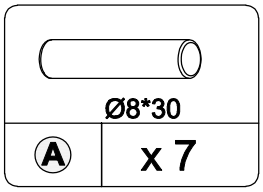

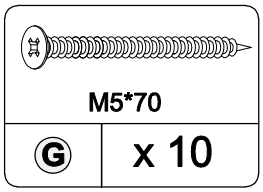

Installation of septum frame

Step 7

1.Connect with hardware A

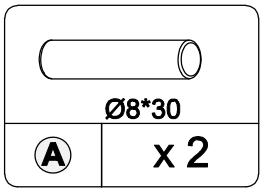

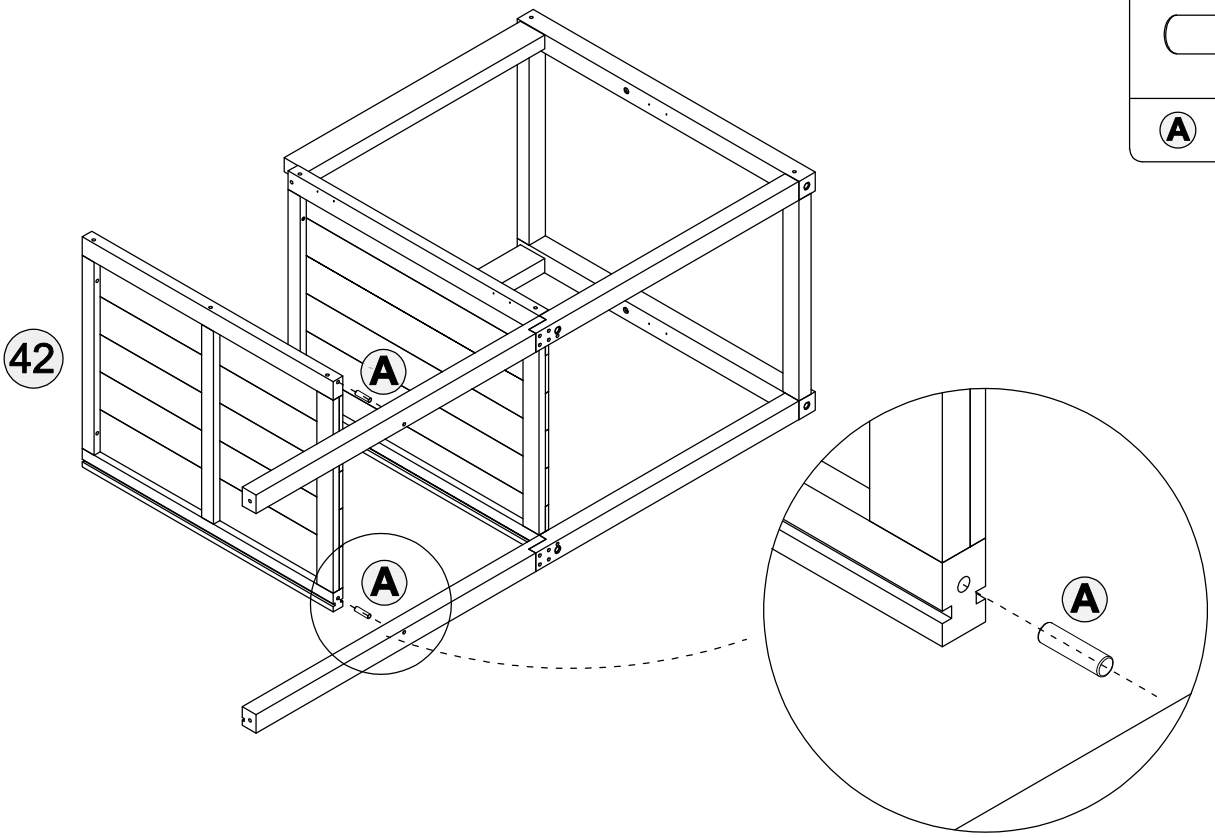

Installation of septum frame

Step 8

1.Connect with hardware F

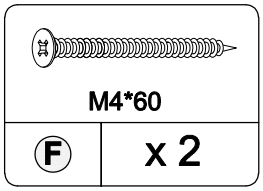

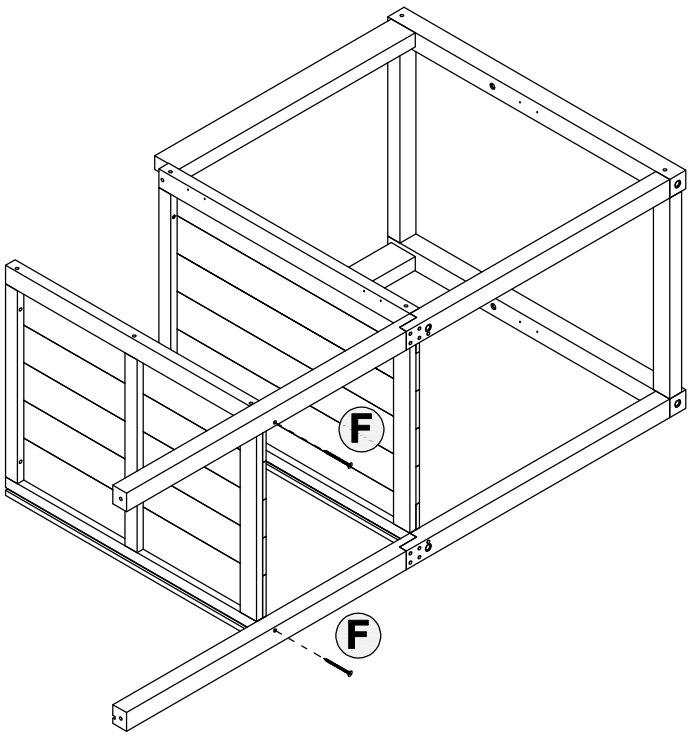

Installation of left frame

Step 9

1.Connect with hardware A

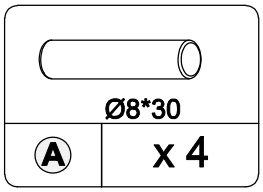

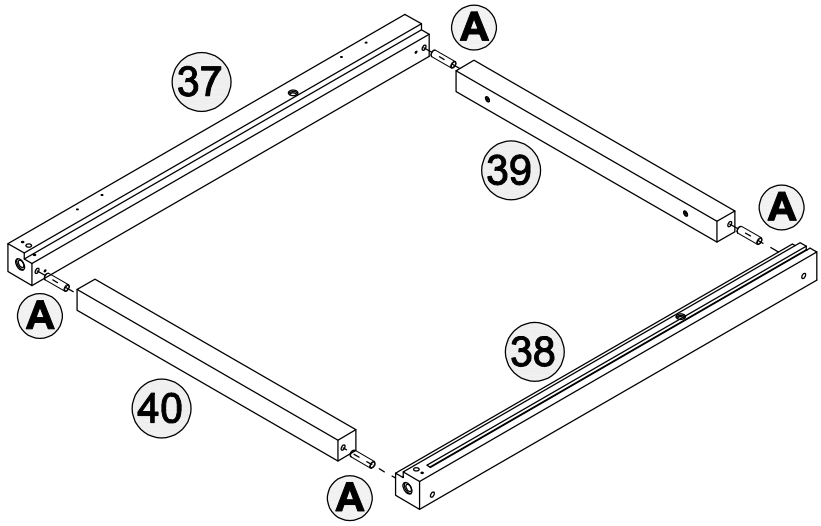

Installation of left core board

Step 10

1. First, put component 41 in, level it, install it with hardware G, and then install it with hardware C

2. Note that the marked position is facing downward

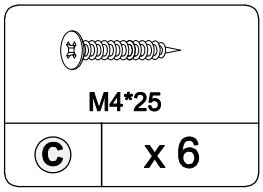

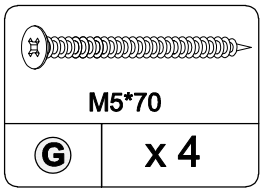

Installation of bracket

Step 11

1. Use hardware D to pass through component 65 and install it towards the lead hole

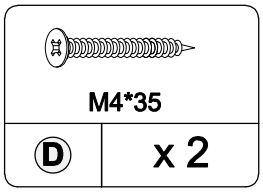

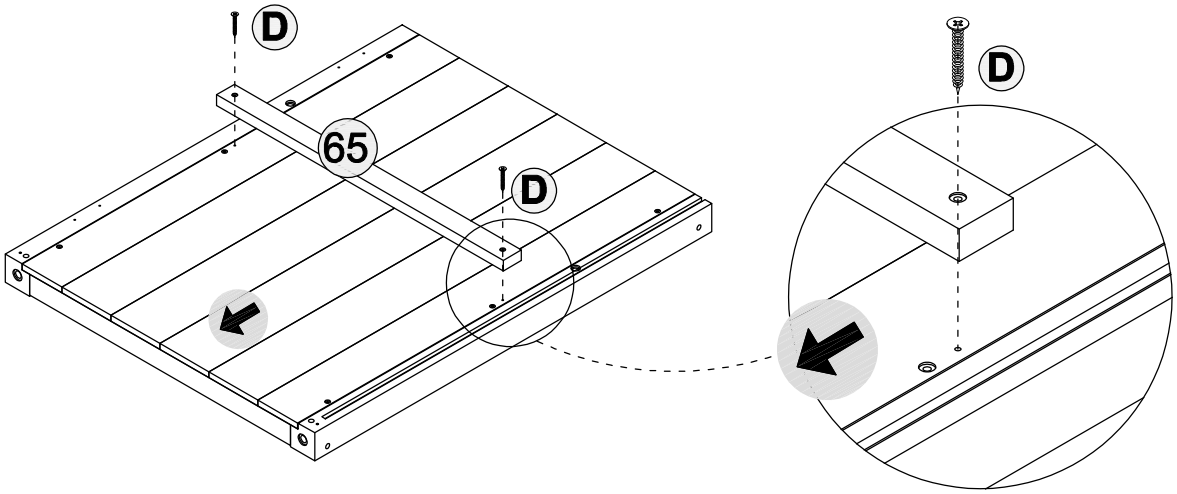

Installation of left side pane

Step 12

1. Connect with hardware A first, then install with hardware G

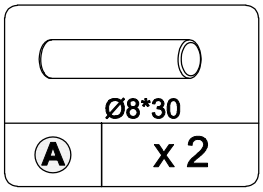

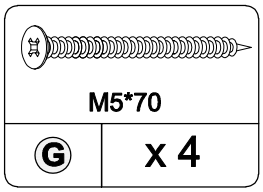

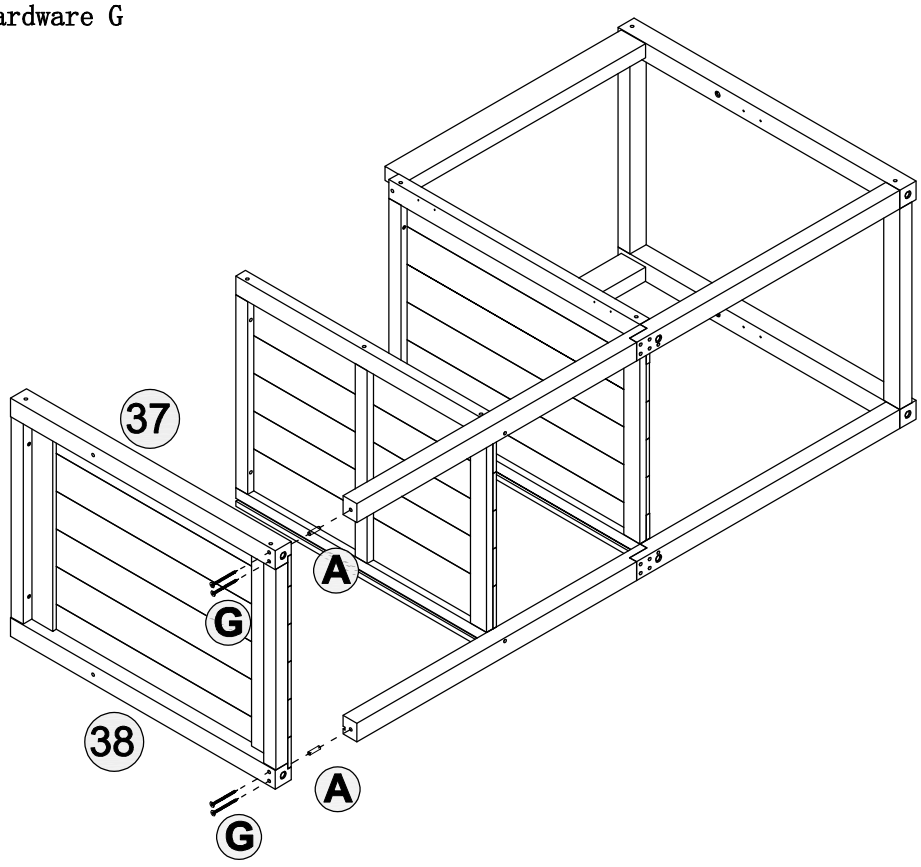

Wheel installation

Step 13

1. Adjust hardware J,K to a uniform height

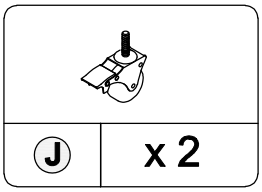

J	x 2

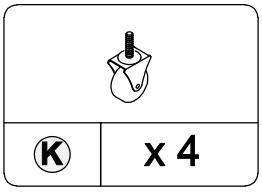

K	x 4

Bottom plate installation

Step 14

1. Use hardware C to pass through component 52,53 and install it towards the lead hole

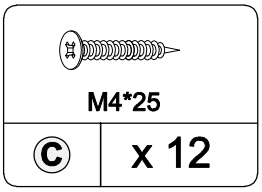

M4*25	
C	x 12

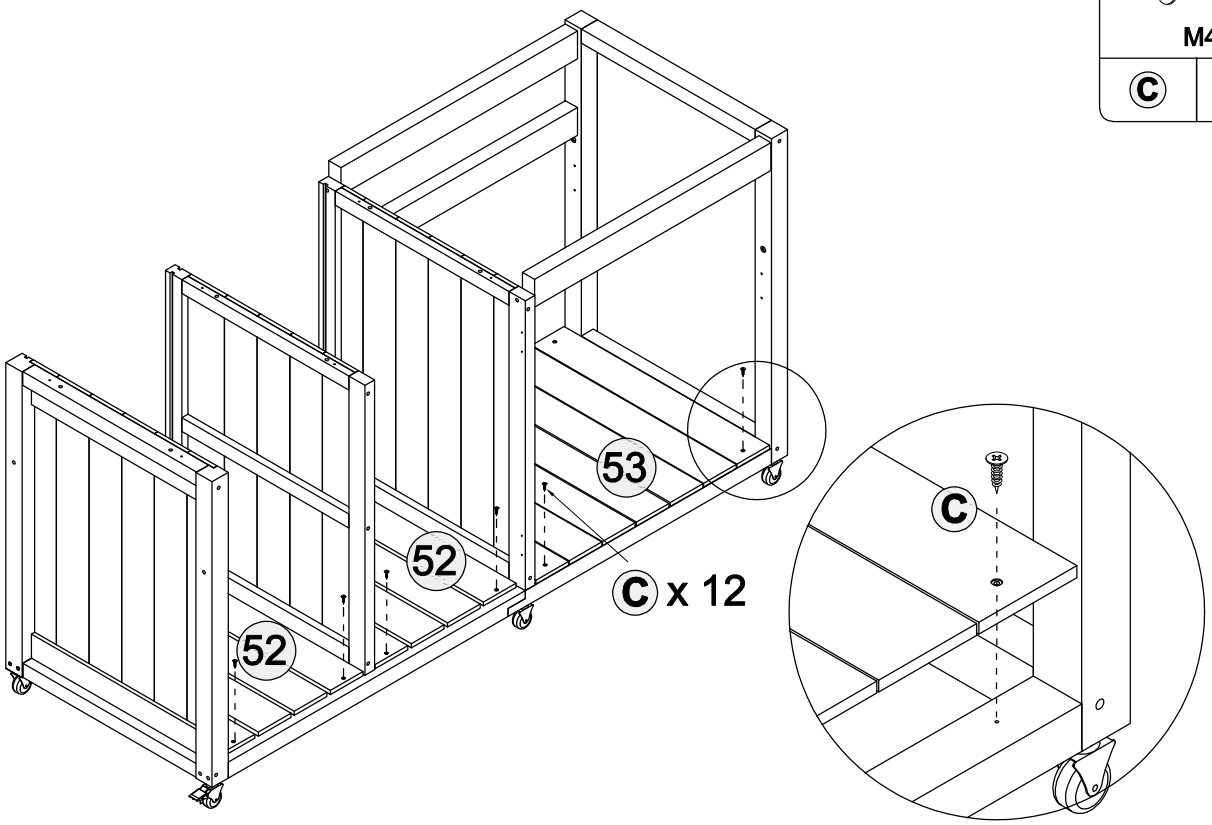

Backboard installation

Step 15

1. Insert components 66 and 67 into the slots until they are fully inserted
2. Install hardware M from behind component 67

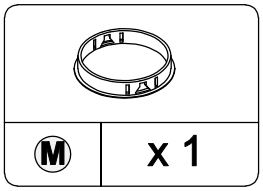

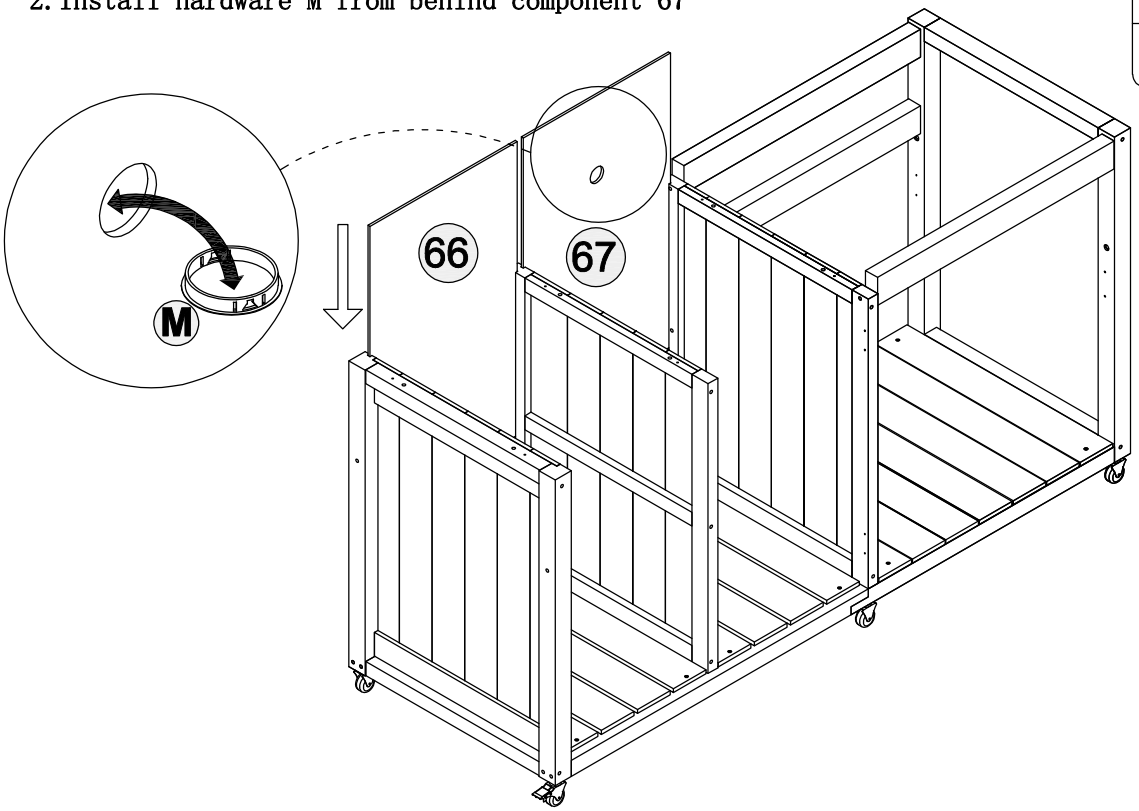

Installation of panels

Step 16

1. Connect with hardware A first, then install with hardware F

There is a backplate groove behind panel 48

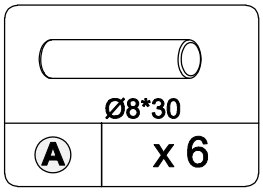

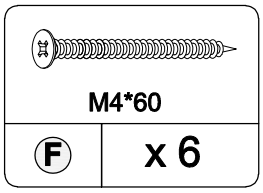

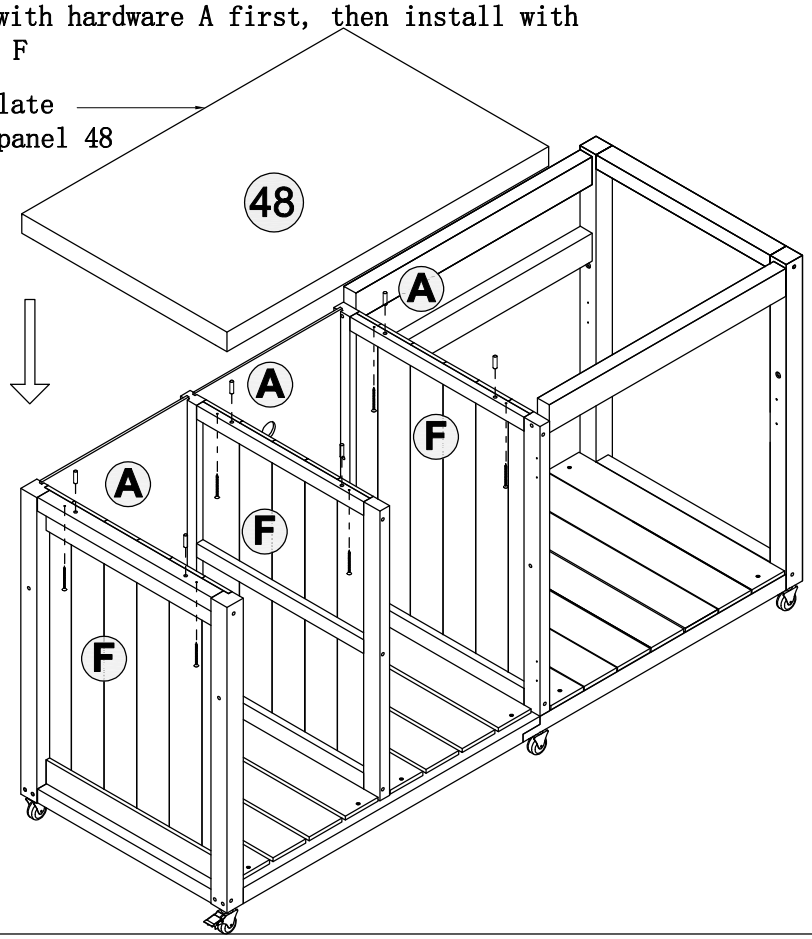

Installation of activity shelves

Step 17

1. Place component 50 on top as shown in the diagram

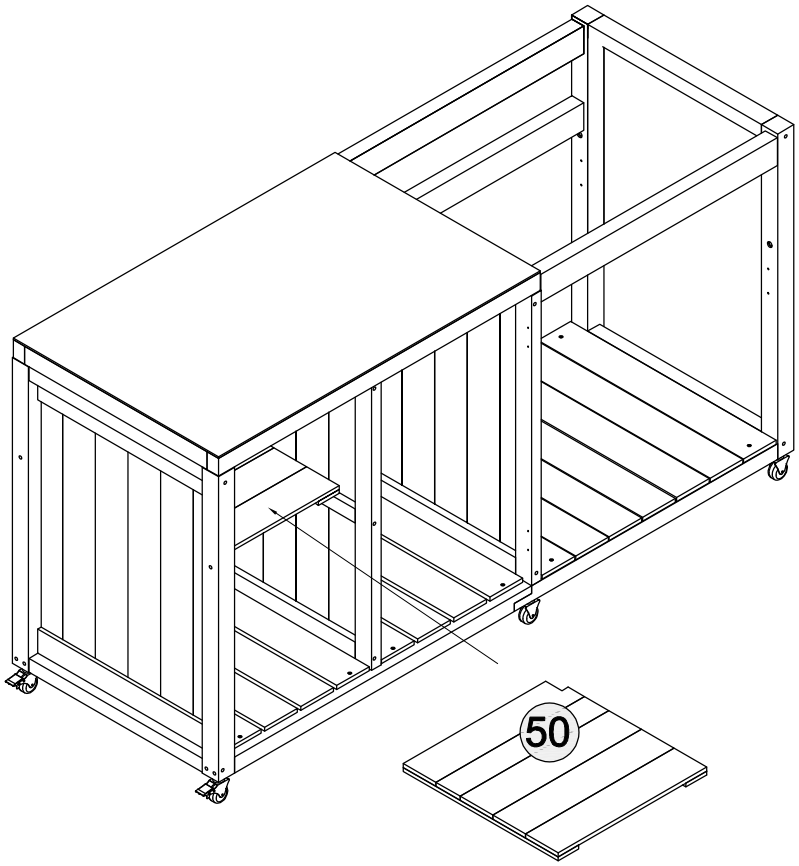

support strip installation

Step 18

1. Use hardware F to pass through component 51 and install it towards the lead hole

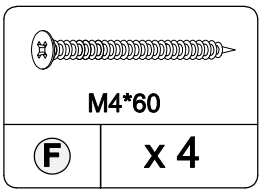

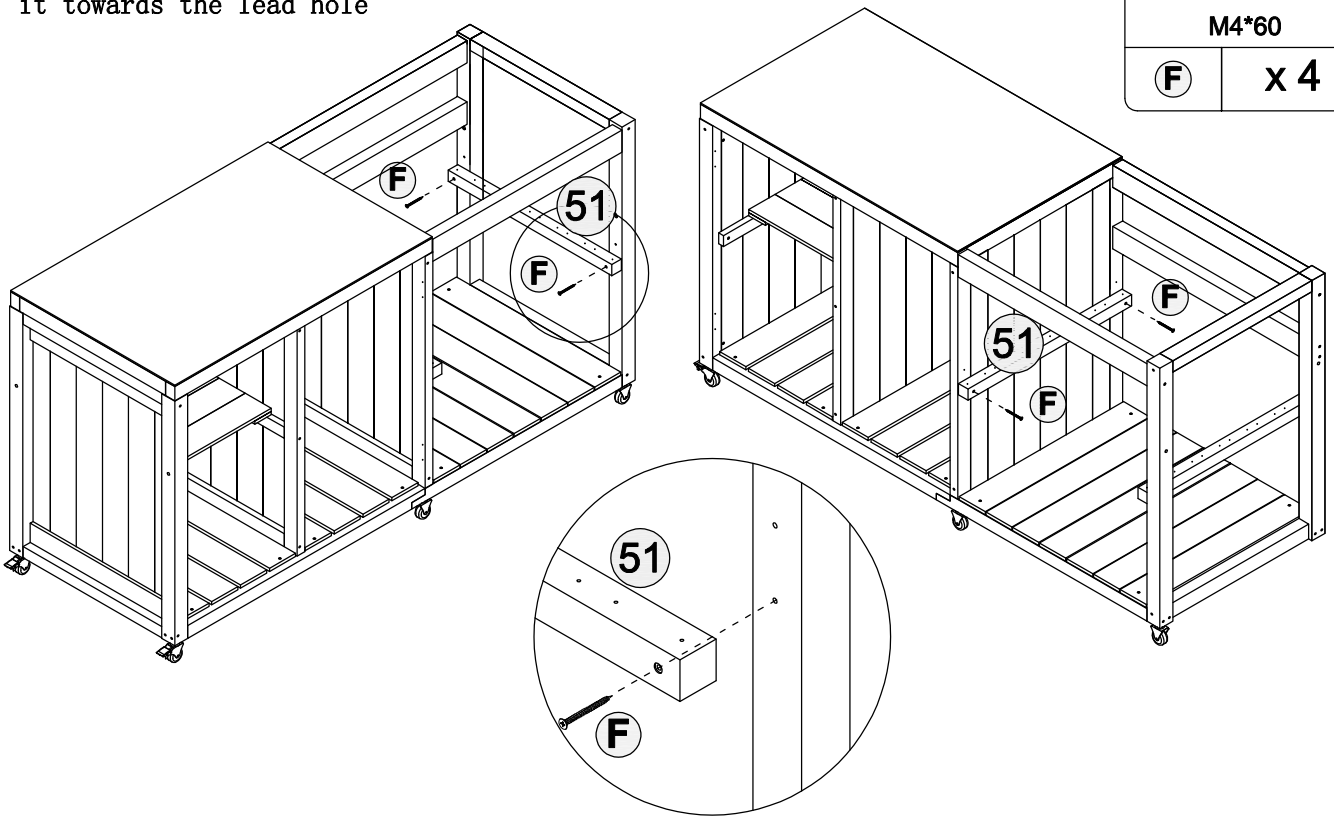

Laminate strip installation

Step 19

1. Use hardware E to pass through component 68 and install it towards the lead hole

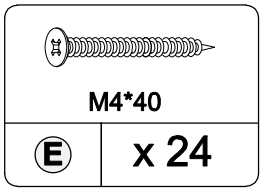

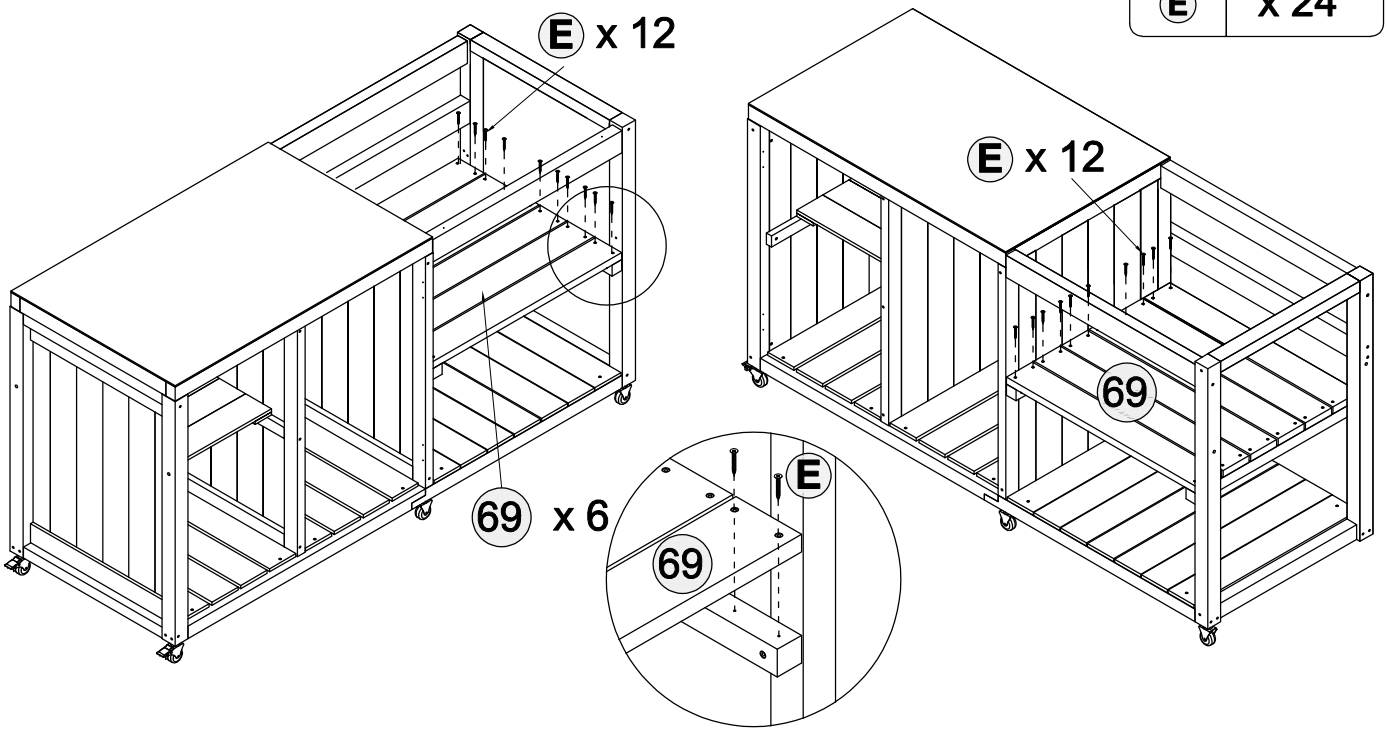

Right panel installation

Step 20

1. Plate 64 is for active use and can be placed on top or bottom
2. Board 64 can be placed below, and an oven can be placed on top

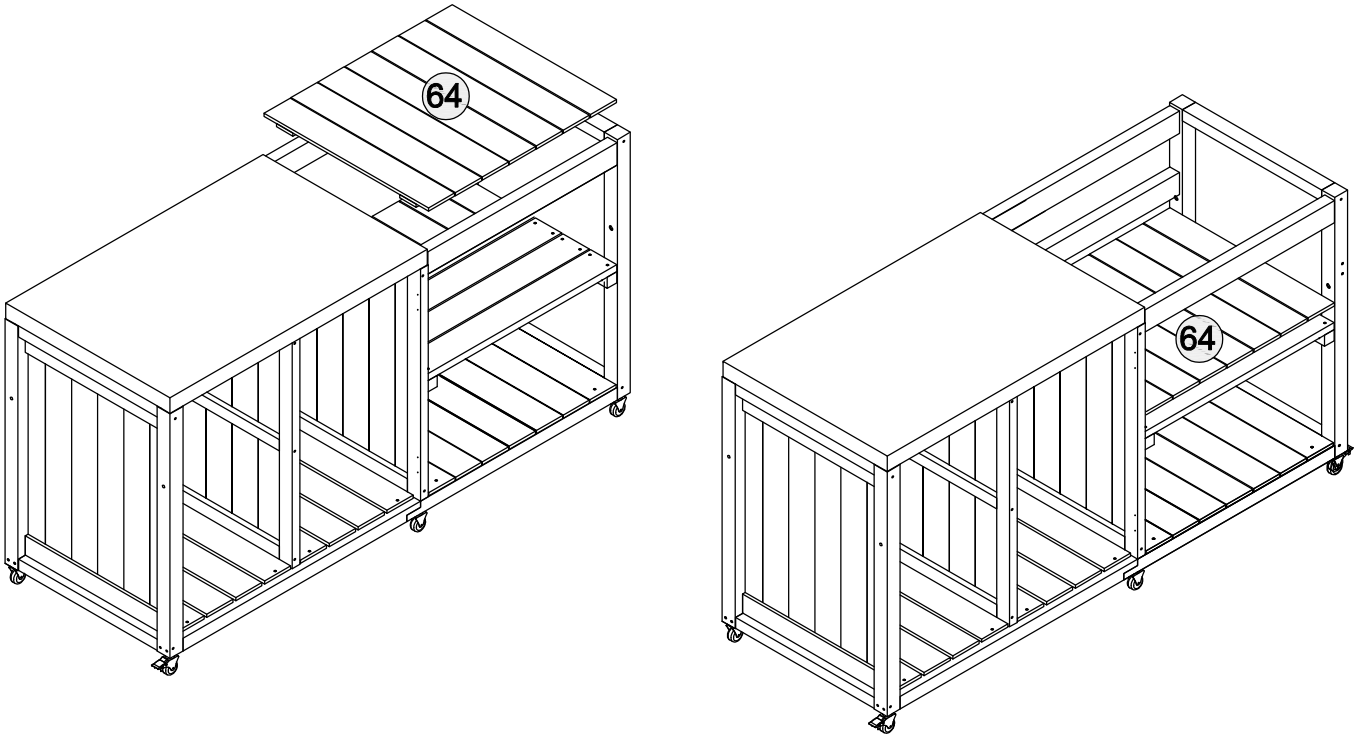

Hanging board installation

Step 21

1. First, use hardware D to pass through component 61 and install it facing the lead hole, Install one end of hardware L
2. After installing component 61, use hardware D to pass through component 62 and install it facing the lead hole

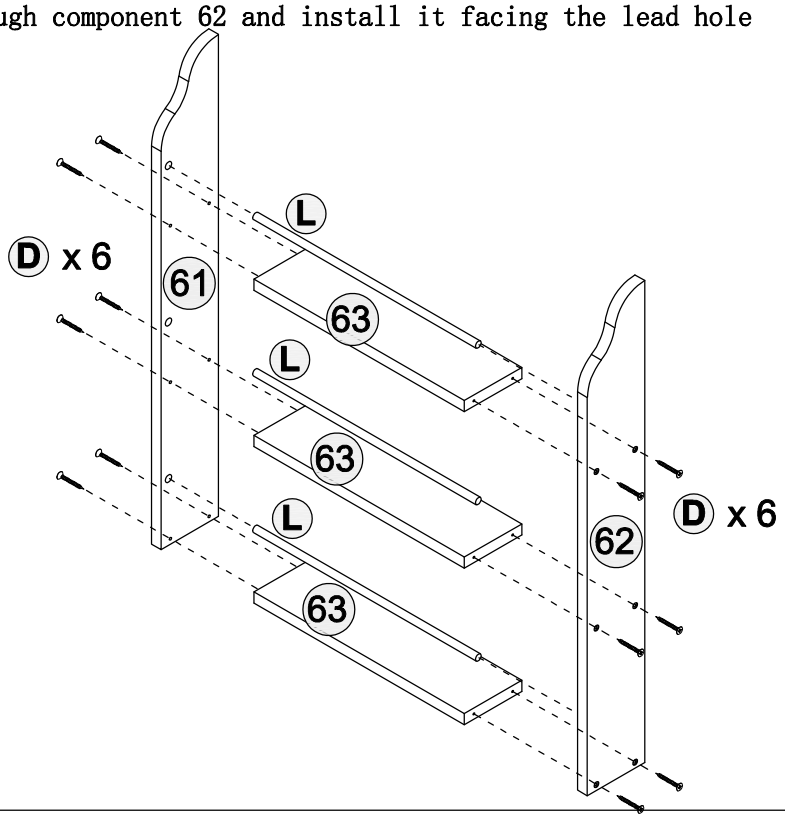



M4*35

D x 12

Ø10*368

L x 3

Installation of hinges

Step 22

⚠ 1. Please note that the hole positions of the pilot holes must be aligned

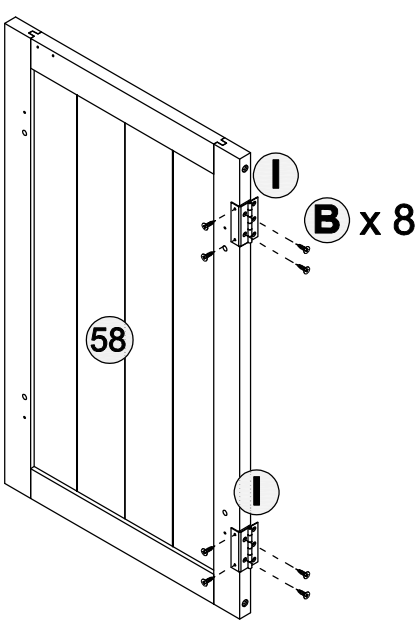

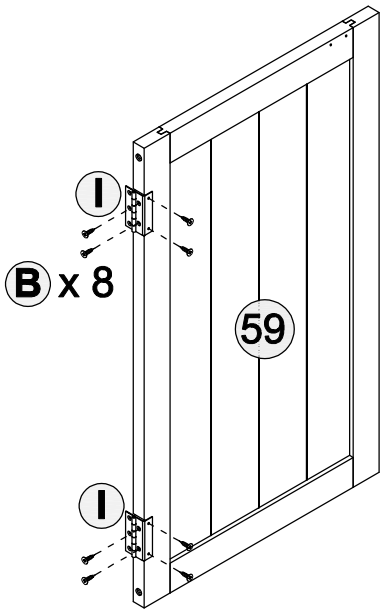

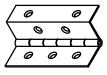

L=62

I x 4



M3*16

B x 16

Hanging board installation

Step 23

1. Connect with hardware A first, then install with hardware E

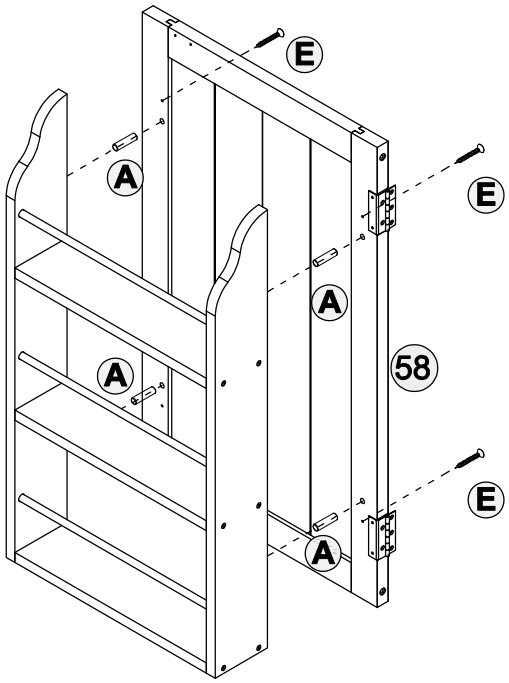

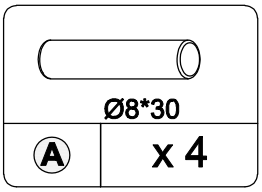

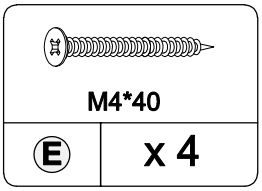

Installation of left door hardware

Step 24

⚠ 1. Please note that the hole positions of the pilot holes must be aligned

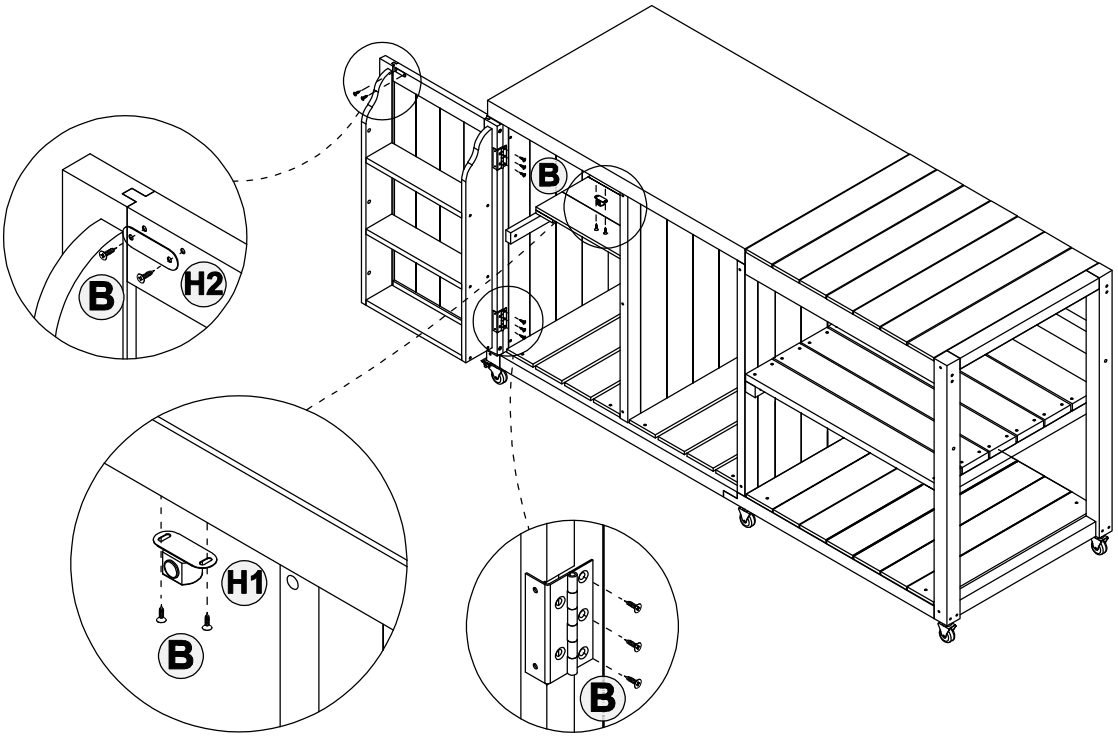

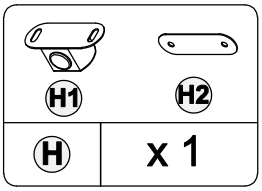

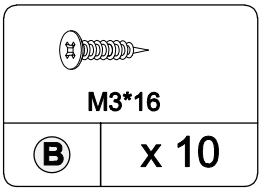

Right door hardware installation

Step 25

⚠ 1. Please note that the hole positions of the pilot holes must be aligned

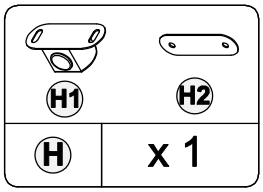

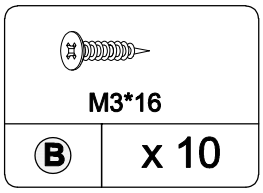

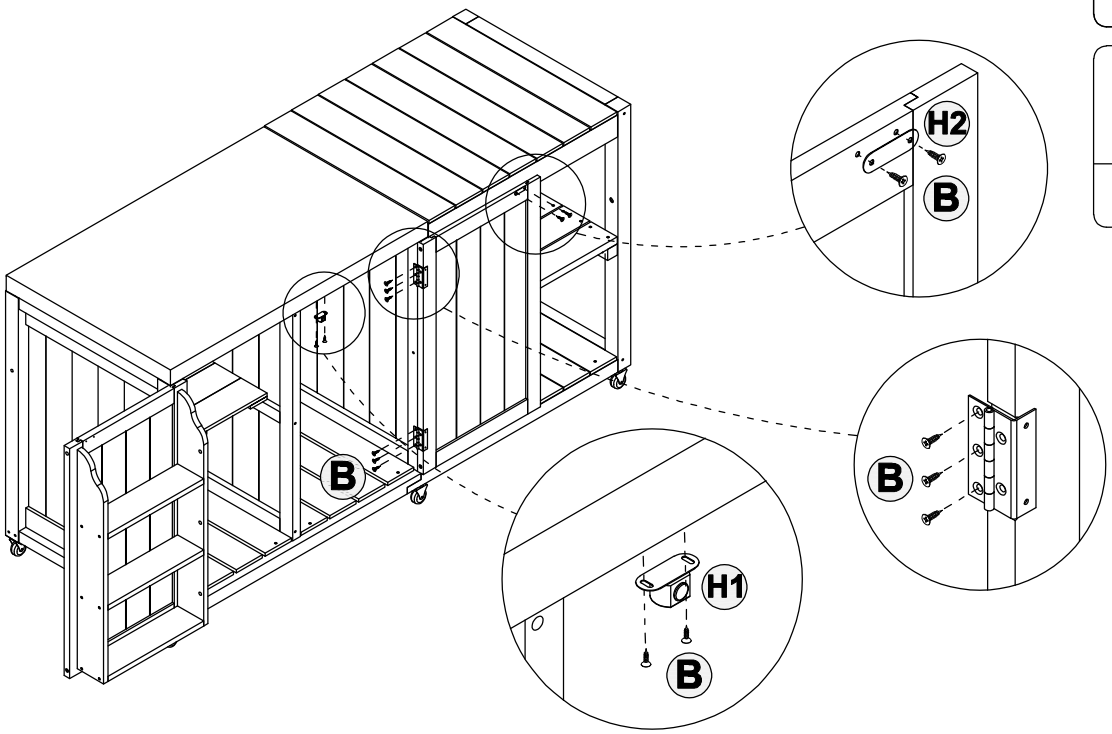

Handle hardware installation

Step 26

1. Plate 64 is for active use and can be placed on top or bottom
2. Board 64 can be placed below, and an oven can be placed on top

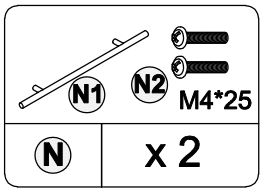

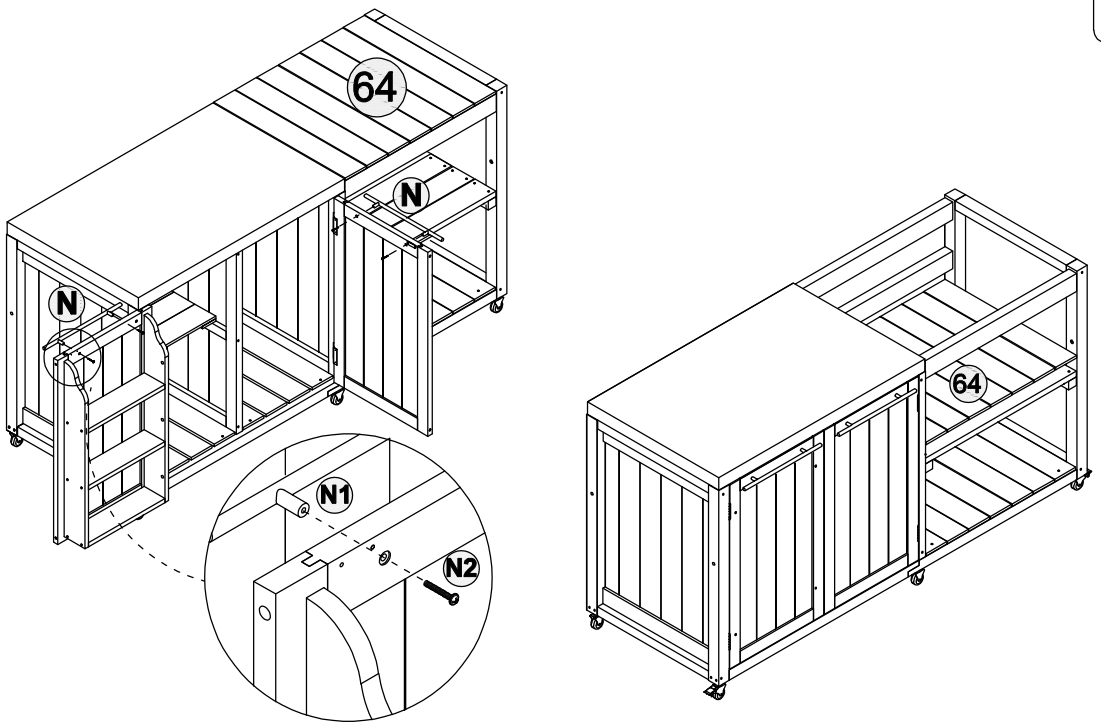

Cabinet connected to cabinet

Step 27

M6*80	Ø8*M6*20	M6
O x 2	P x 2	Q x 2

1,First, place hardware P into the hole and use tool Q to connect hardware O with hardware P

