MADE IN CHINA

# ASSEMBLY & INSTALLATION INSTRUCTIONS

## INSTALLATION STEPS

2001-9AMB-P
OPERATIONS MANUAL

Dear Customer：

Thank you for choosing us! We truly appreciate your business and your trust. If you have any questions or encounter any issues, please don't hesitate to reach out. You can contact us by email at amzlightting@outlook.com. Our team is committed to ensuring your complete satisfaction. We also value your feedback, as it helps other customers make informed decisions. If you're happy with your purchase, we'd be grateful if you could take a moment to leave a brief product review on the platform where you made your purchase. Once again, thank you for choosing us. We look forward to serving you again!

Best regards,
The Support Team

Warning: If any special control devices are used with this fixture, follow the instructions carefully to assure full compliance with N.E.C. requirements. If there are any questions, contact a qualified electric contractor.

Warning: California Residents Proposition 65
This product contains lead, a chemical known to the state of California to cause cancer and birth defects or other reproductive harm. Do not place the product in your mouth. Wash your hands after handling this product.

Caution: It is highly recommended to get an electrician to install this light.Please make sure to turn the electricity off at the main circuit breaker before beginning installation. All glass is fragile.Use care when handling glass component(s) and/or lamp(s).




Please read all instructions carefully. Before you proceed to install, make sure that the power supply is turned off and remains off until installation is completed.



All glass is fragile.Use care when handling glass component(s)and/or lamp(s).



It is highly recommended to get an electrician to install the light.

Lighting your life with design

**CAUTION**
Risk of fire/Electric shock

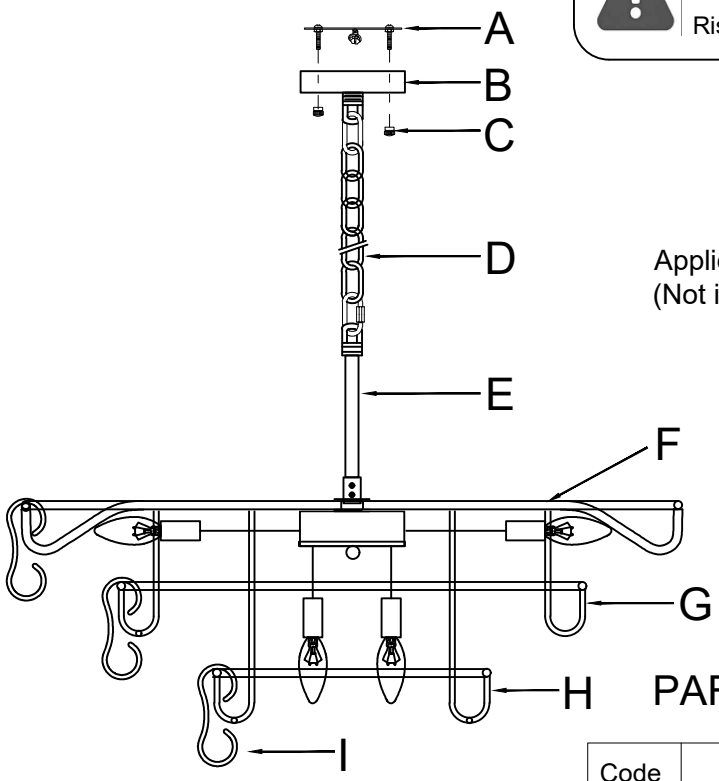


Applicable bulbtype: B10、CA10
(Not included)




Installation video

## PARTS INCLUDED

| Code | Part Description | QTY |
|---|---|---|
| A | Mounting Bracket | 1 |
| B | Canopy | 1 |
| C | Cover Nut | 2 |
| D | Chain | 1 |
| E | Central Pipe | 1 |
| F | Crystal string | 1 |
| G | Chandelier Body | 1 |
| H | Metal frame1 | 1 |
| I | Crystal | 133 |
| | | |
| | | |

MADE IN CHINA

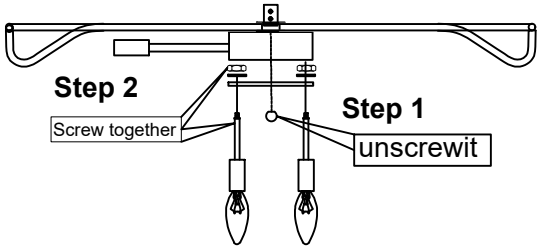


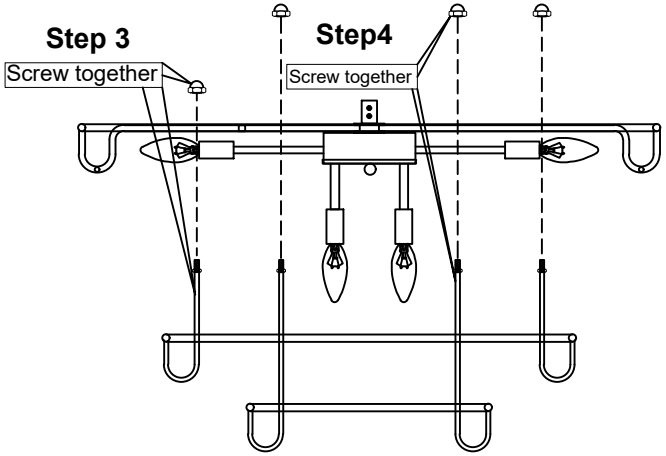


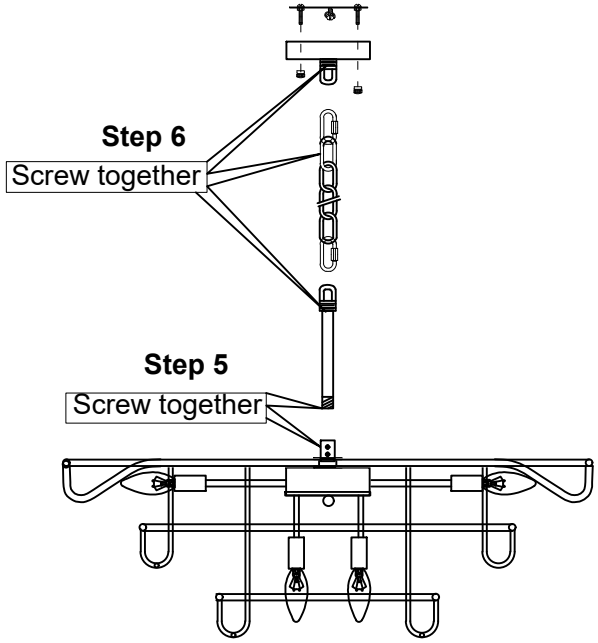


Lighting your life with design

