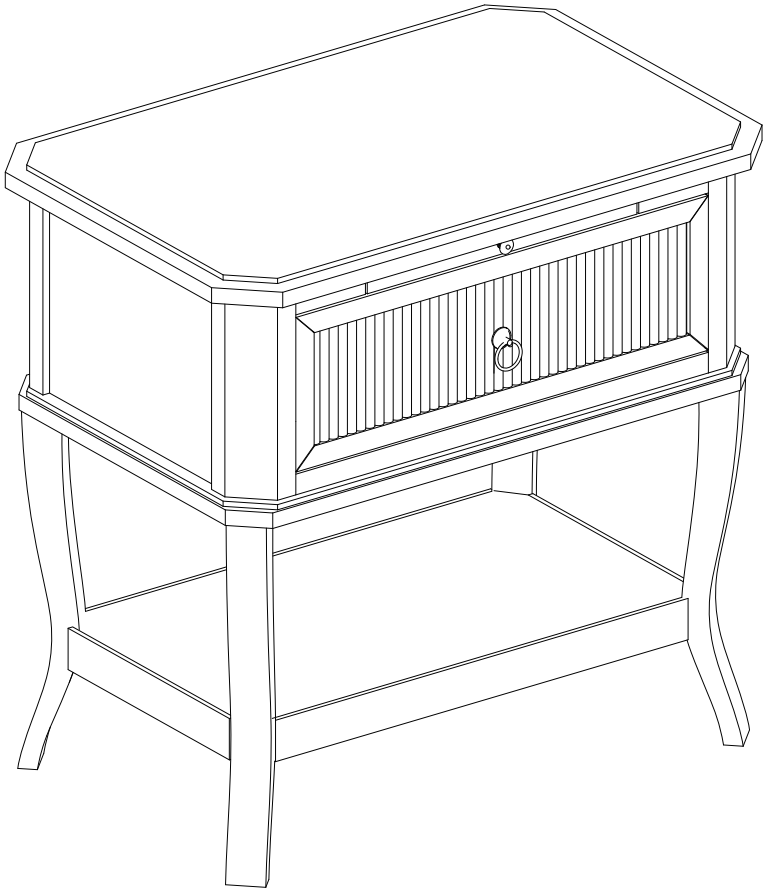

ITEM NO. ETCL1922

Scan for manual,
vido & advice.

If you have any questions or concerns,
don't hesitate to reach out to us.

Call us: +1(833)324-2464 (8 AM to 5 PM PST Monday-Friday)
Email: customerservice@hulalahome.com

MAINTENANCE AND WARNINGS

Thank You For Choosing Our Furniture.
Please read the instructions and warnings carefully before use, to ensure safe and satisfactory operation of this product.

NOTE :
This brochure contains IMPORTANT safety info. Please read and keep it for future reference.



Weight Limitation
80 LBS

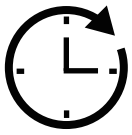

Installation:
15 minutes.

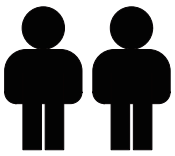

Two Person



Before You Start

Please follow the steps below:

- Unbox the package and check if all parts and accessories are complete.
- If you find something missing, stop assembly and contact your supplier immediately.
- Please do not completely tighten all the hardware until the entire assembly is completed! Be sure to tighten all the hardware once the assembly completed.
- NOTE:Should be assembled on soft surface to keep balance.

After-Sales Service

- If you encounter any issues or need technical support during use, please contact our after-sales team. We offer long-term maintenance and warranty services.

Warranty

We strive to offer high , quality products, and we also try our best to satisfy each and every customer that orders from us with product or service as needed. Each customer must provide a record of their order such as the order number, or item receipt for any items that are out of the warranty period you may also still receive replacement parts by purchasing them with our company if they are available.

Are you having dificulty with assembly? Missing parts? Please send email with your order number to **customerservice@hulalahome.com**

For return, please check the return policy with the retailer or market place you bought from. Appreciate your purchasing from us. Pop up your life by our furniture piece!

Daily Maintenance

- Keep furniture away from heat.
- Do not use cleaning agents containing acids, alkalis,or corrosive substances, as they may damage the surface. It is recommended to use neutral cleaning agents or specialized furniture cleaners.
- Do not place furniture under direct sunlight, material will possibly fade over time.
- Do not use on site dry cleaning machine.
- Children should not climb or jump on the furniture.
- Do not write on furniture without a padded barrier to protect the surface.
- Not for commercial use, for residential use only.

Exploded View

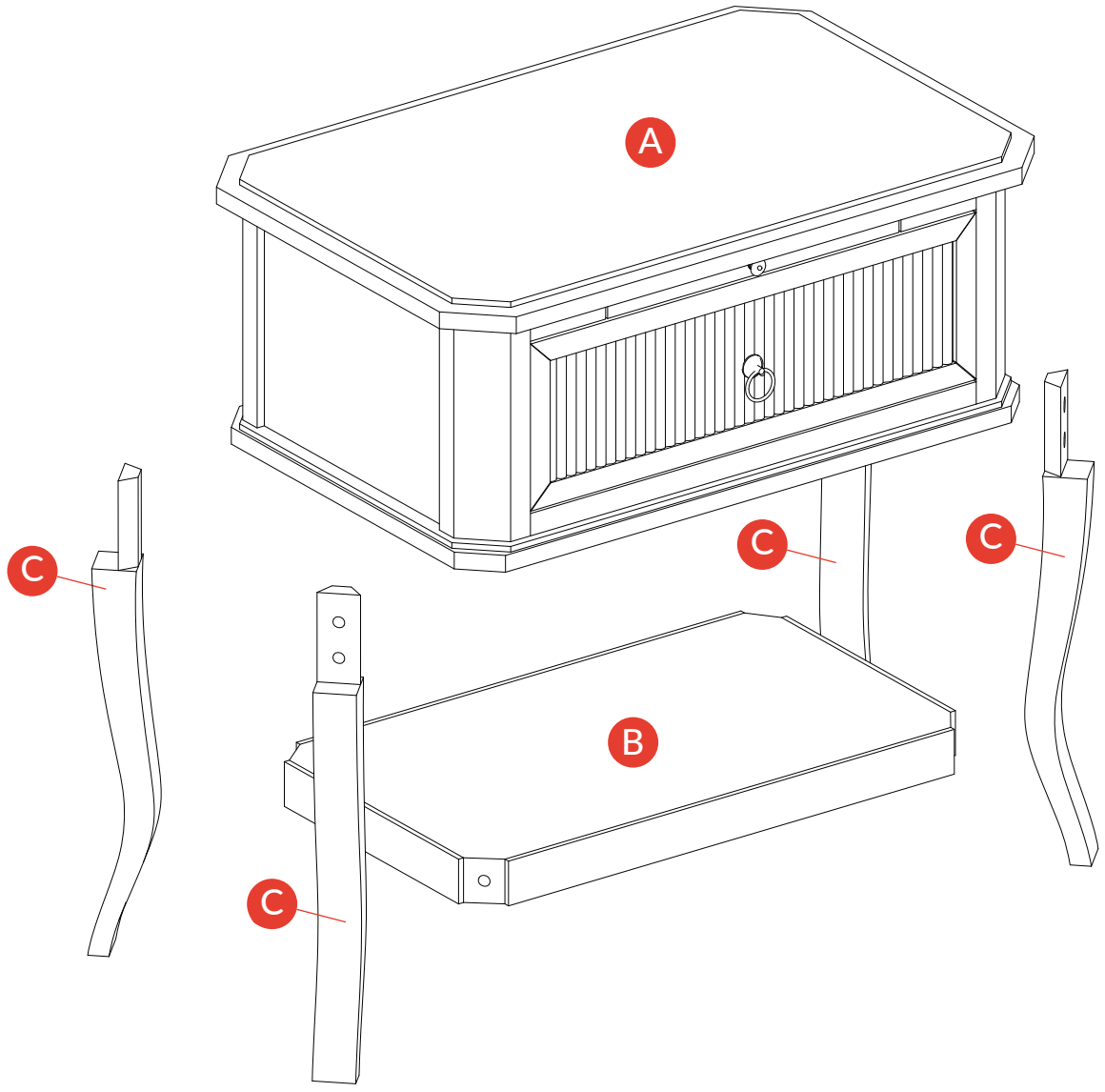

Parts List

A ×1

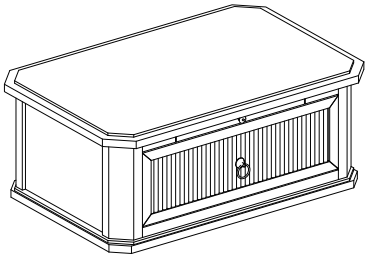

Cabinet body

B ×1

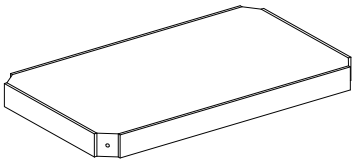

Shelf board

C ×4



Legs

Hardware List

1 ×12+1

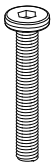

screw M6*30mm

2 ×2

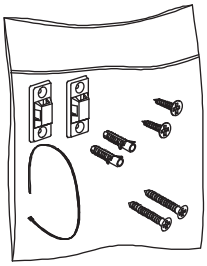

Accessory Kit

3 ×1

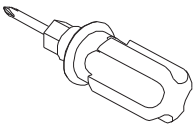

Screwdriver

4 ×12+1



washer

5 ×12+1



spring washer

6 ×1



hex wrench

ASSEMBLY INSTRUCTIONS

Step 1

Open the accessory box and remove pieces C along with the hardware packet.

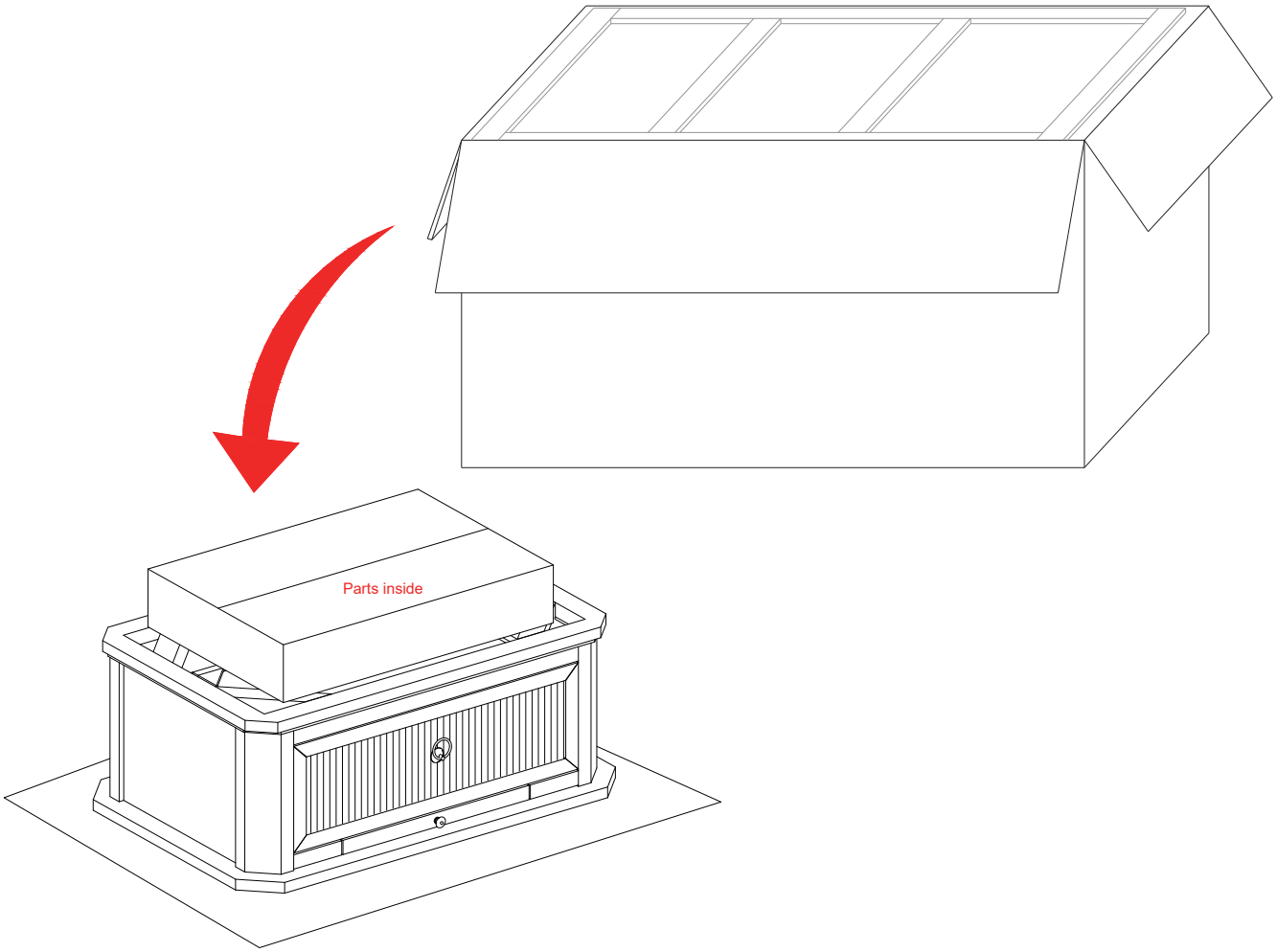

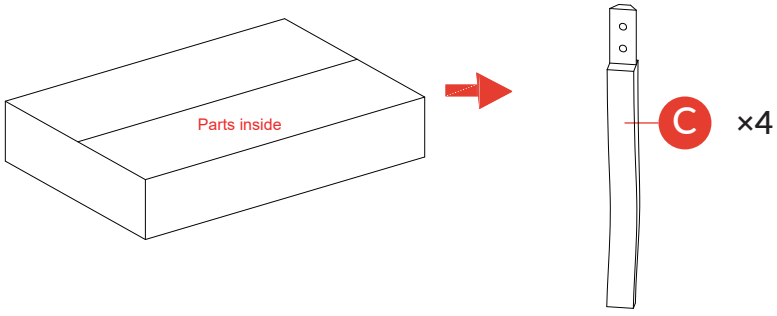



Step 2

1. Pull out the drawer before installing part C.
2. First, thread parts 4 and 5 onto screw 1. Then, use them to attach part C to part A, and tighten with wrench 6 to 60%.

1	× 8	M6*30mm
4	× 8	washer
5	× 8	spring washer
6	× 1	hex wrench

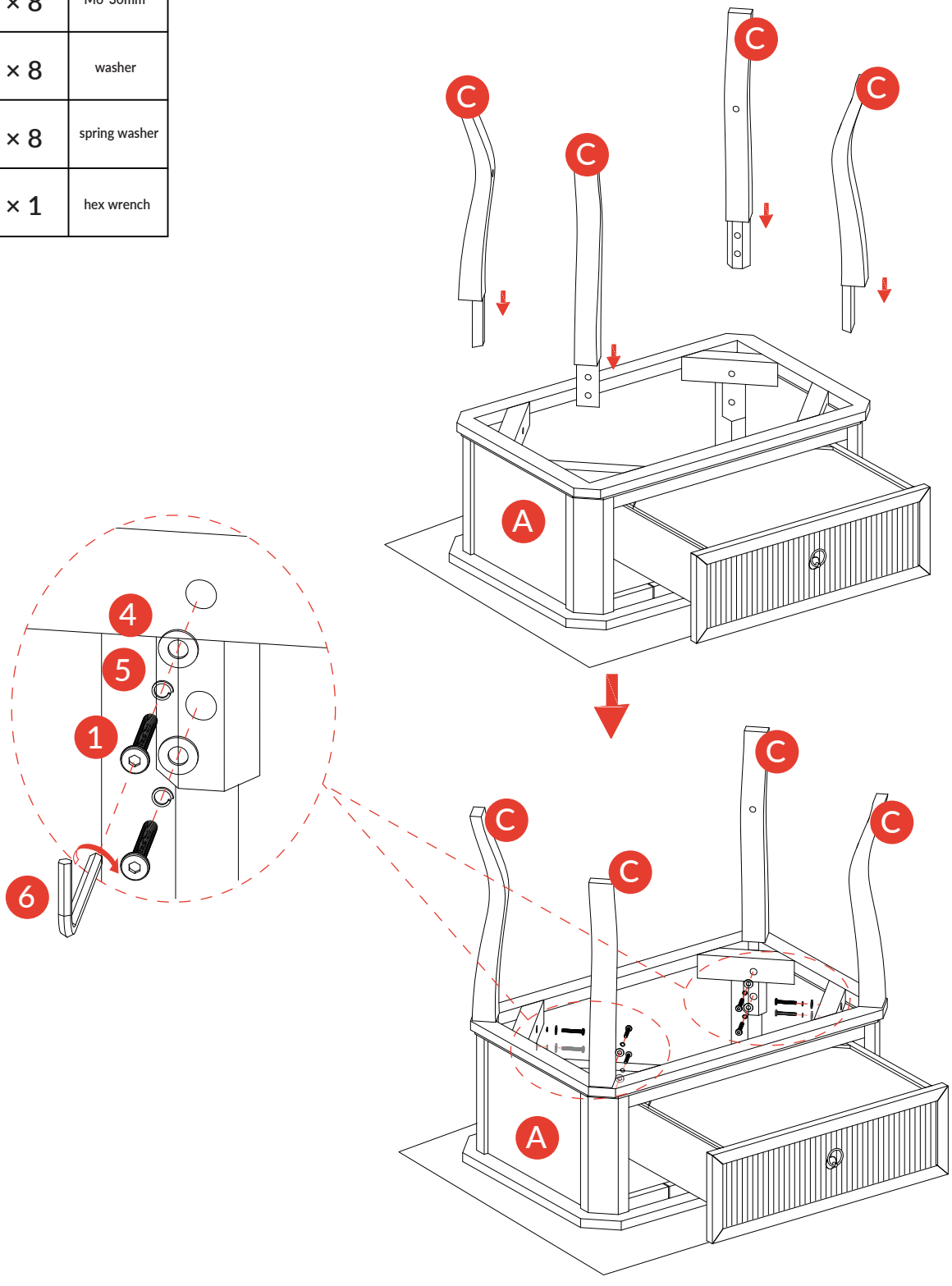

Step 3

1. Place part B in position.
2. First, thread parts 4 and 5 onto screw 1. Then, use them to attach part C to part A, and tighten with wrench 6 to 60%.
3. Finally, tighten all screws.

1	× 4	M6*30mm
4	× 4	washer
5	× 4	spring washer
6	× 1	hex wrench

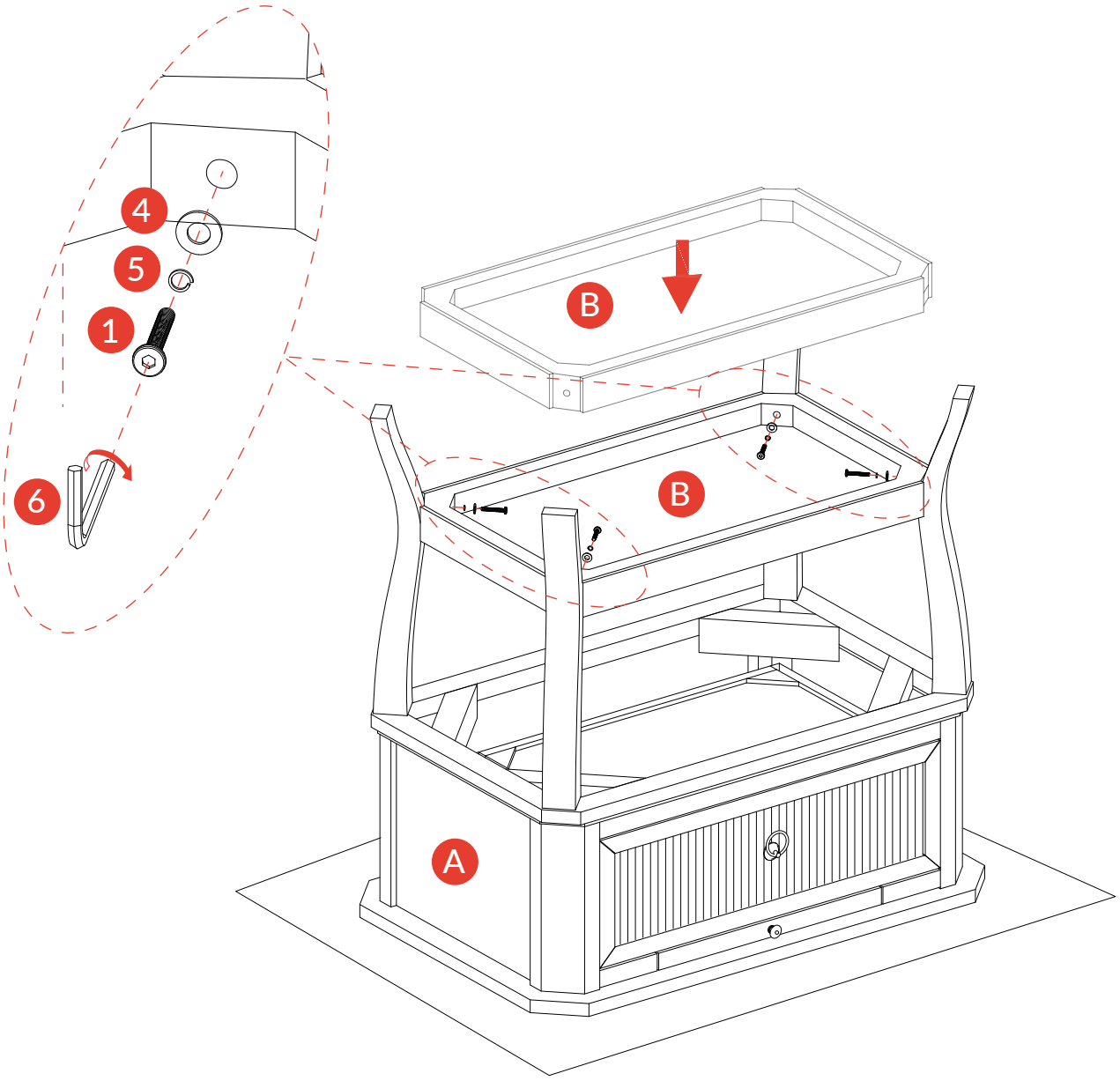

Step 4

Use screw (2-1) to attach plastic bracket (2-2) to panel A,tighten screw (2-1) with screwdriver (3).

2		× 1	Accessory Kit
2-1		× 4	M3.5*14mm
2-2		× 2	plastic bracke
3		× 1	Screwdriver

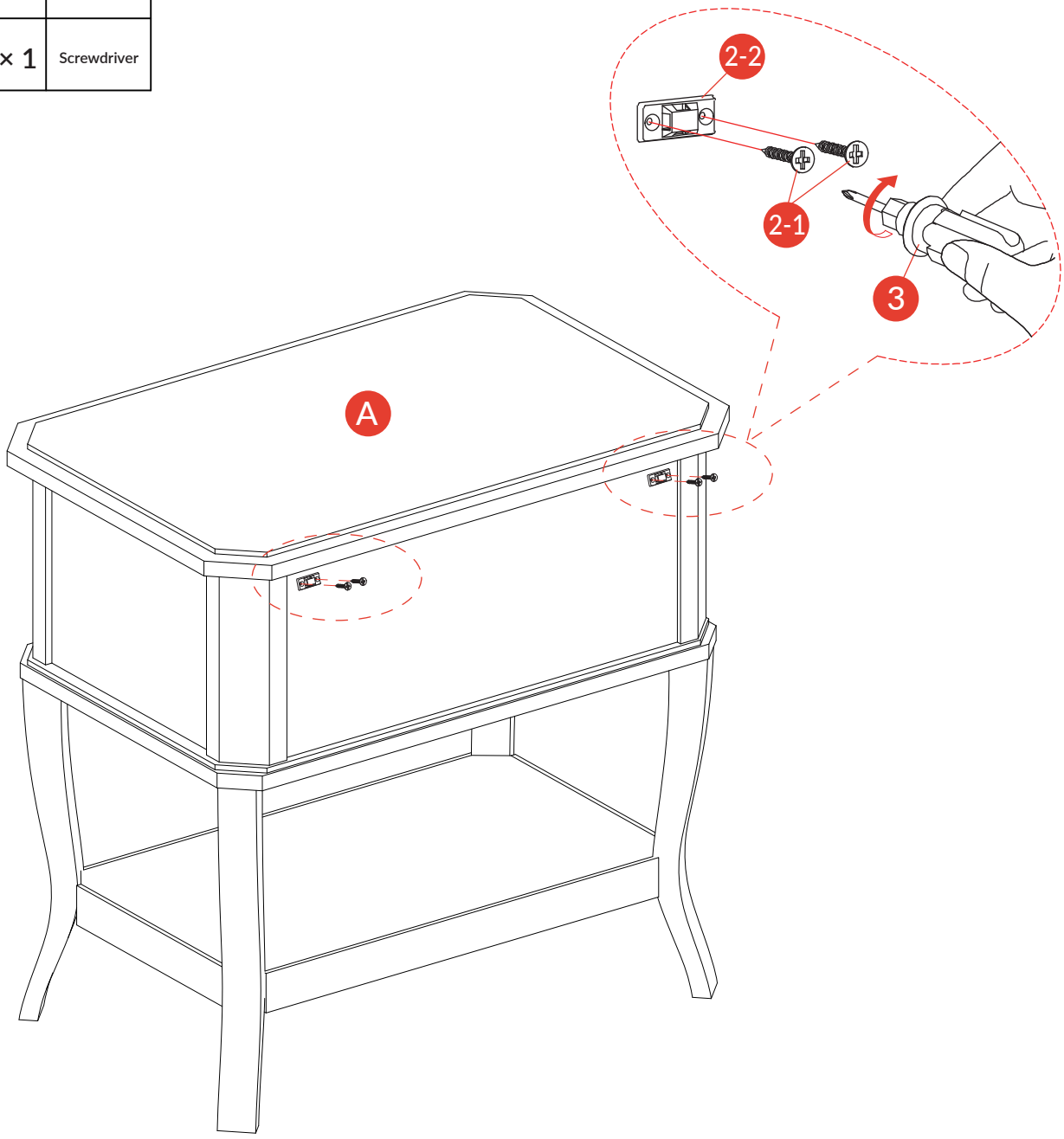

Step 5

Install Anti-tip device (2-2) to the wall in this step.

2	× 2	Accessory Kit
2-2	× 2	plastic bracke
2-3	× 4	expandable screw
2-4	× 4	M4*35mm
3	× 1	Screwdriver

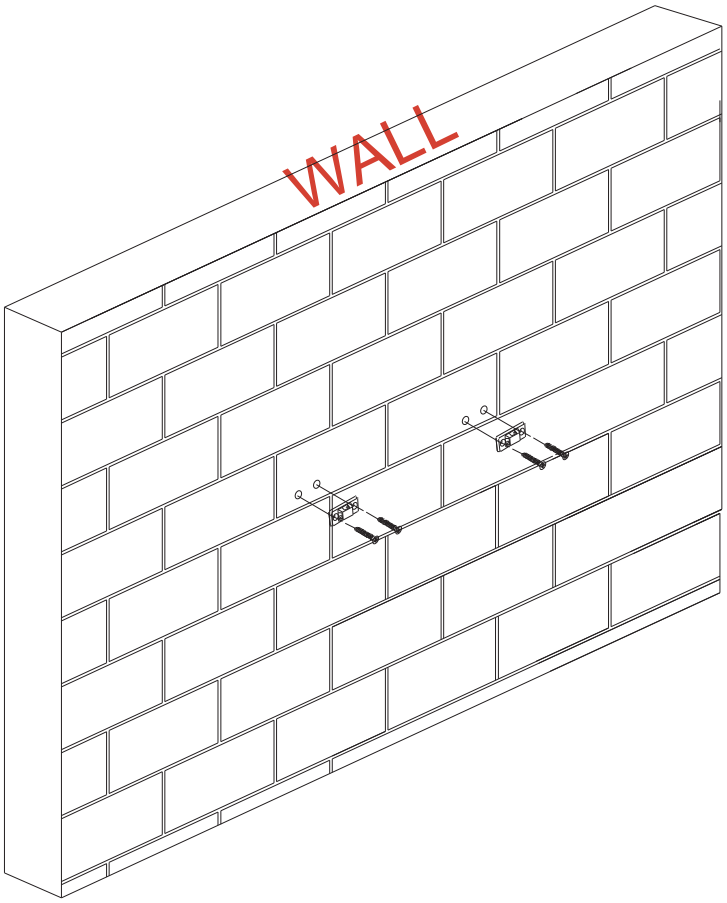

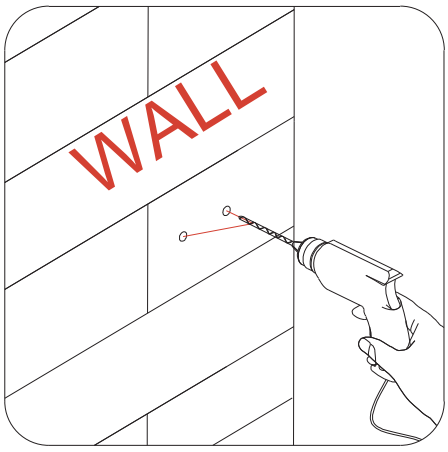

1.Drill a hole in the wall with an electric drill.

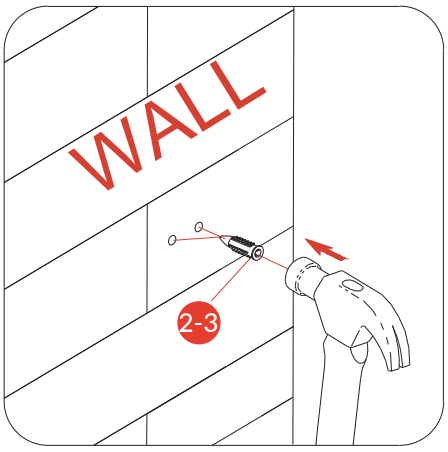

2.Tap the plastic wall anchor into the hole with a hammer.

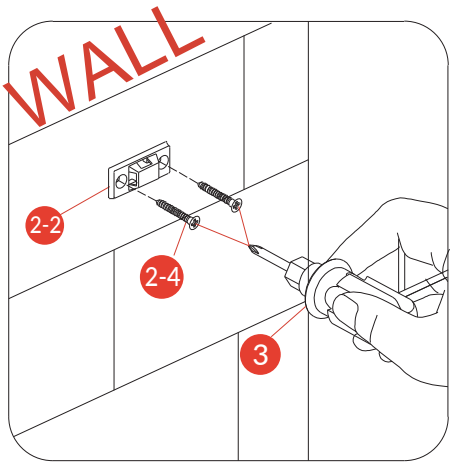

3.Secure the Anti-tip device (2-2) to the wall with screws (3)

Step 6

Let the plastic belt (2-5) pass through bracket (2-2) and pull tightly.

2	× 2	Accessory Kit
2-5	× 2	plastic belt

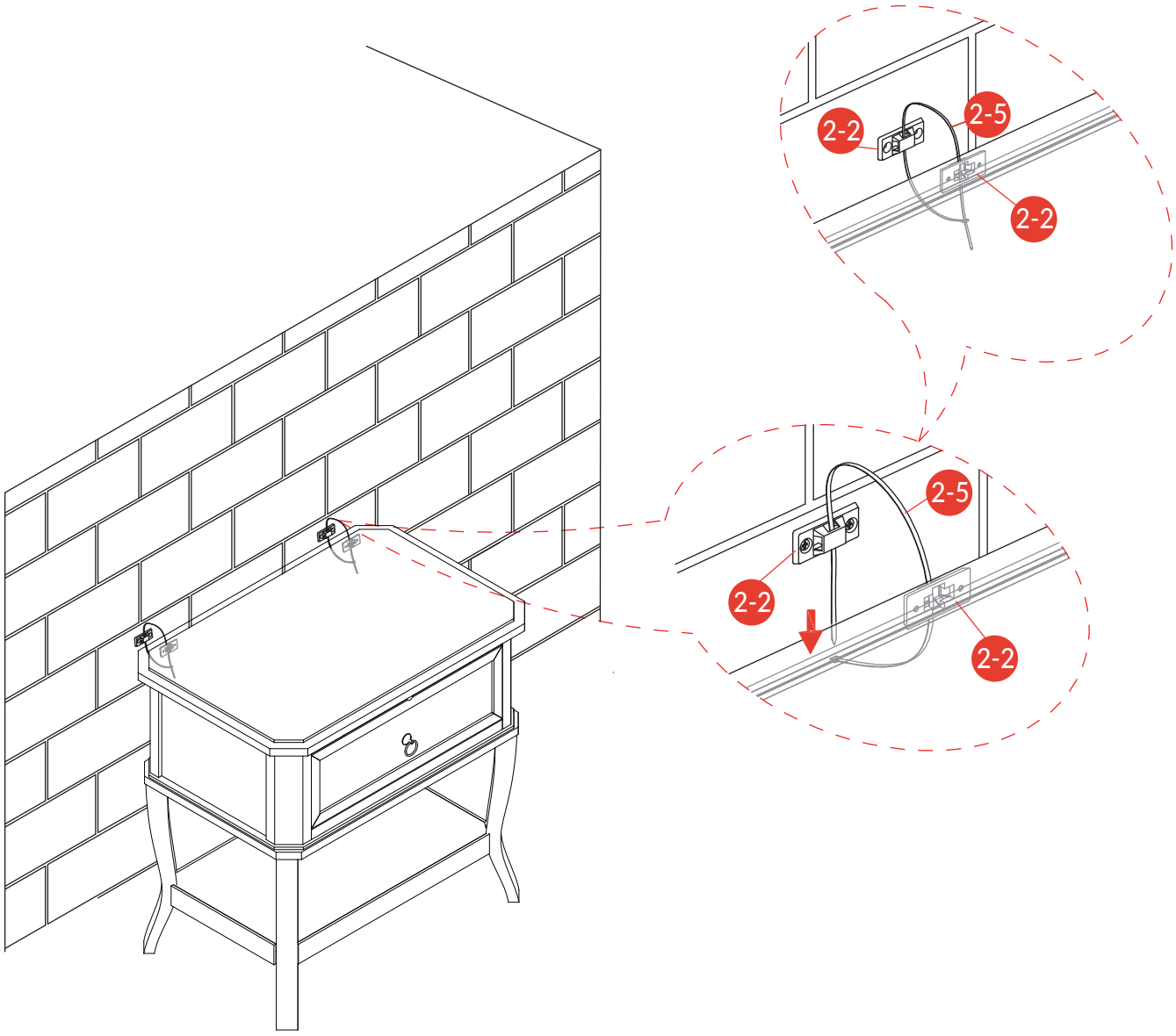

Slide Rail Installation Method

1.Slide out the tab.

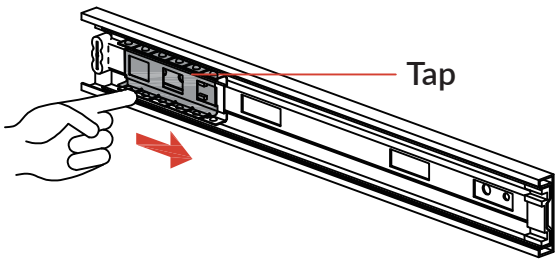

2.Position the slide rod against the tab.

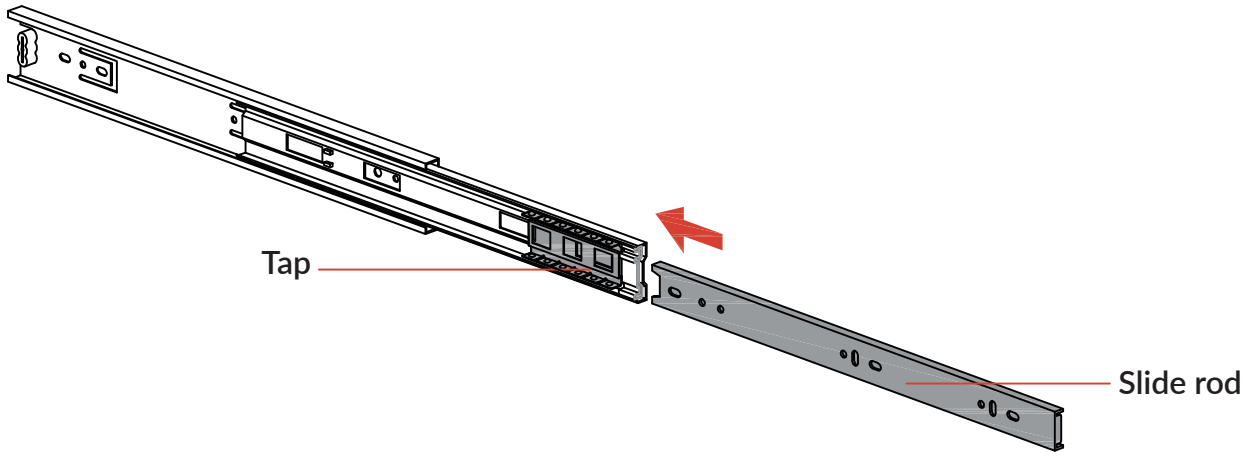

3.Push the drawer in.

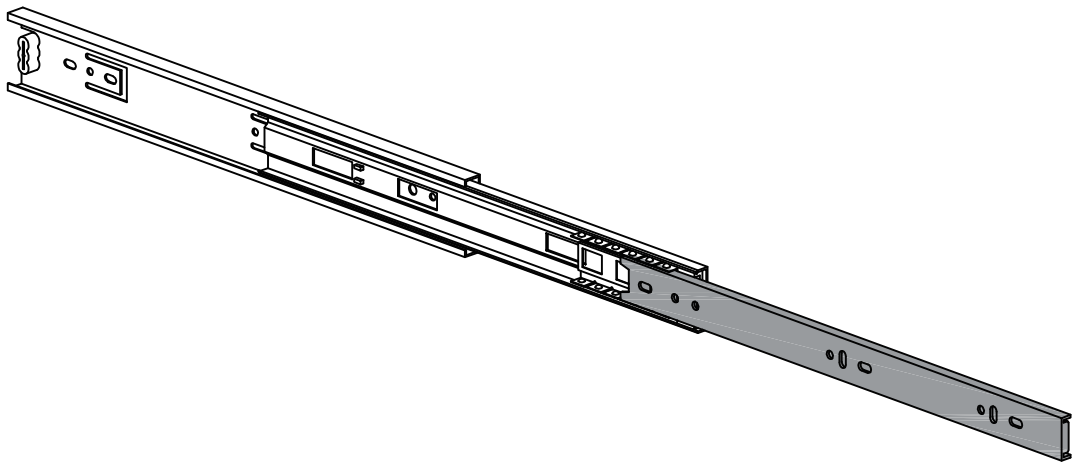

WWW.HULALAHOME.COM
Email: customerservice@hulalahome.com
Call us: +1(833)324-2464 (8 AM to 5 PM PST Monday-Friday)