ORRS

PFWSC8871 SINGLE HANDLE LAVATORY FAUCET

Product Features

- Max. flow rate: 1.2 gpm (4.54 L/min) at 60 psi
- Brass construction
- Ceramic disc cartridge
- 50/50 pop-up drain assembly
- Optional deck plate included
- With 3/8" compression x 22" flexible connectors

Optional Parts

1.0 GPM Aerator	Neoperl 42.3058.00000
Drain Lift Rod Extension	PF351NA

Codes and Certifications

PFWSC8871

NSF/ANSI/CAN 372
NSF/ANSI/CAN 61:Qc1

- Certified to ASME A112.18.1 / CSA B125.1
- cUPC/IAPMO listed
- Handle ADA compliant
- NSF/ANSI/CAN 61: Q ≤1
- EPA WaterSense certified

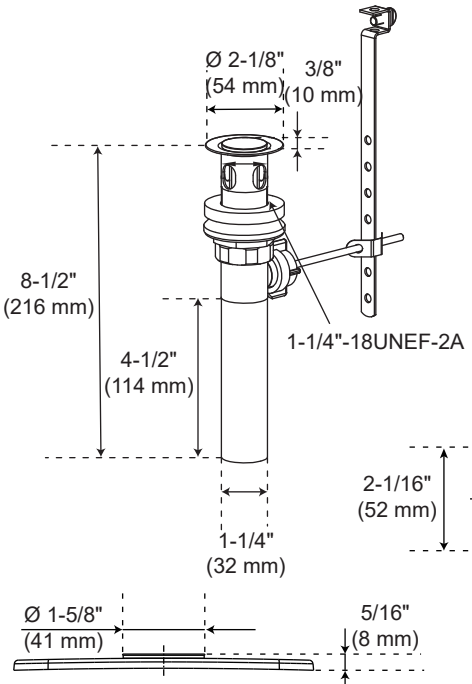

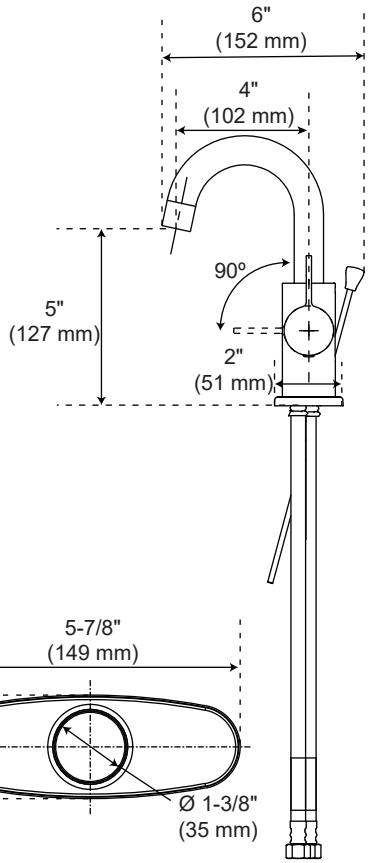

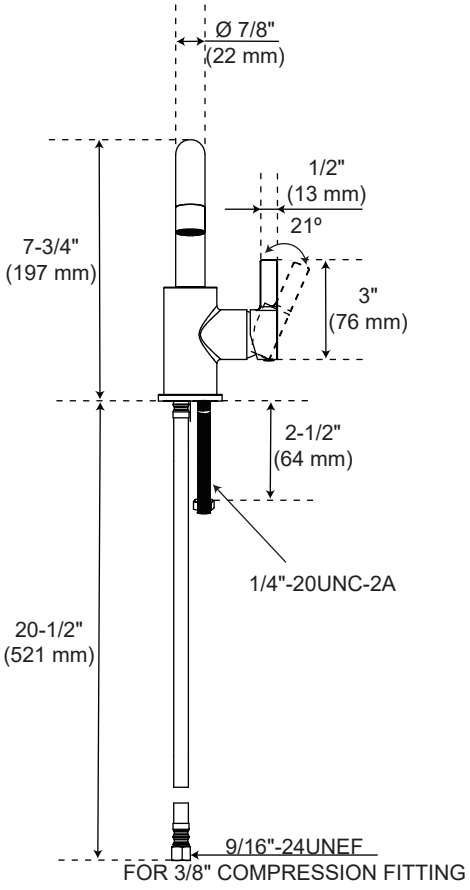

For detailed warranty information, visit **ferguson.com/proflo-faucet-warranty**.

©2025 Ferguson Enterprises, LLC. FG 01/2025-B