CARE AND MAINTENANCE

Never use abrasive or acid-based cleaners on the shelf rack. Clean shelves and rods with a solution of mild detergent and water. Use a soft cloth or sponge to wipe parts. Rinse and dry thoroughly. Keep surfaces dry and clean for a longer lasting finish.

NOTICE

Please read and understand these instructions before attempting to assemble, operate or install the product.

-Two adults required for a safe assembly.

-Do not allow children to climb or play in or around the shelves.

-Assemble on a soft surface, such as carpeting to avoid scratching the finish.

PREPARATION

1.Before beginning assembly of product, make sure all parts are present. If any part is missing or damaged, do not attempt to assemble the product.

2.Estimated Assembly Time: Approximately 15 -25 minutes.

3.Helpful Tools (not included):Rubber Mallet.

4.Decide on the shelf location before beginning the assembly.Once the Product is assembled,it is very dificult to move a shelf without taking the entire assembly apart and starting over.

5.No Tools Required for Assembly.

ASSEMBLY INSTRUCTION

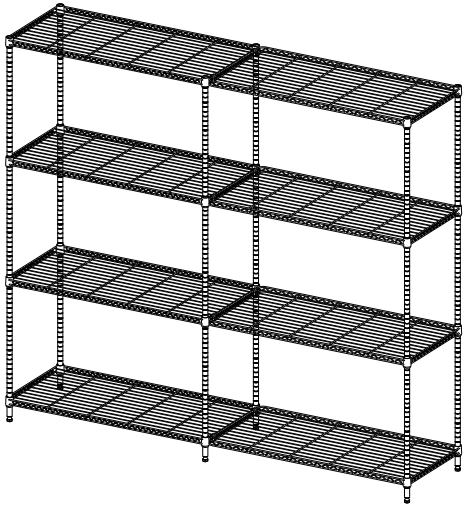

TYPE A

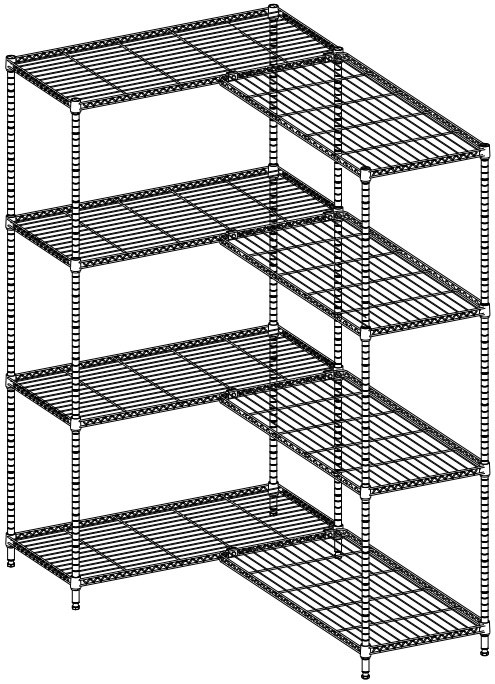

TYPE B

PART LIST:

A 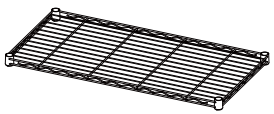 Steel Shelf A x4	B 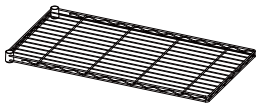 Steel Shelf B x4	C Pre–installed 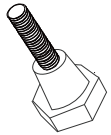 Adjustable Feet x6
D 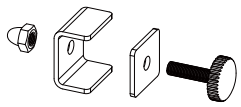 Hook Kit x 8	E 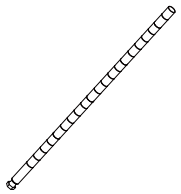 Lower Pole x6	F 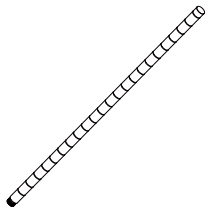 Upper Pole x6
G  Clip x48	H 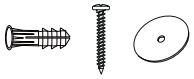 Anti–Tip Kit x4	I  x1

NOTE: Please check all parts and accessories according to the parts list before assembling, make sure all contents are suffcient and in good condition.If there is any parts missing or defective,please contact us immediately with purchase platform message to get replacement parts.

TYPE–A INSTALLATION

Step 1 Learn to install Clips on poles.

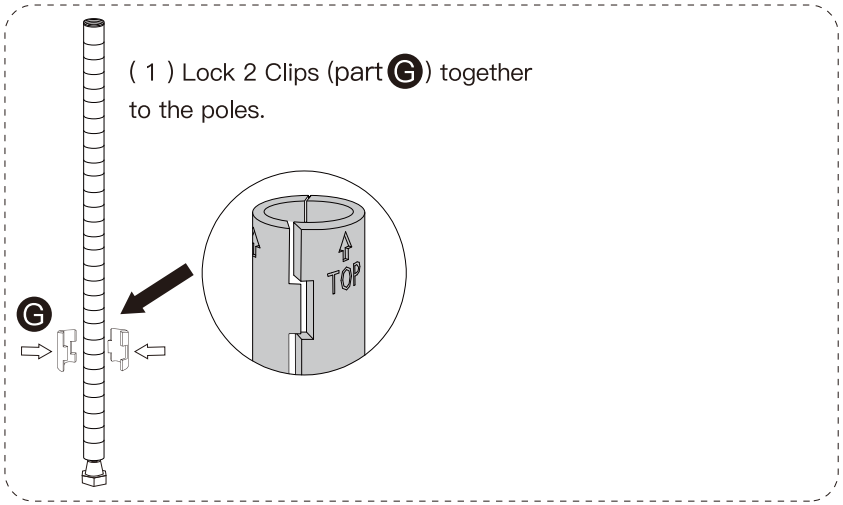

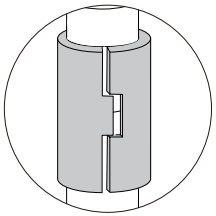

Note:

There is a gap between 2PCS plastic clips assembled onto the poles as shown in the picture, this is a structural design rather than a quality issue, which aims to bind the shelves firmly onto the pole.

Step 2 Install (part Ⓐ) on part (Ⓔ).

(1) Lock Clips (part Ⓖ) on 6 Lower Poles (part Ⓔ).

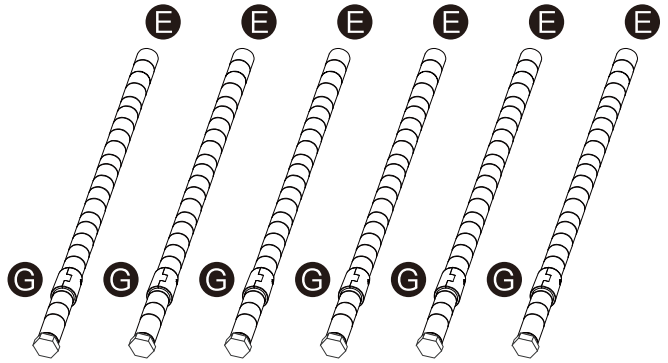

NOTICE:

• Please install the clips as lower as possible to ensure the shelf is closer to the ground for better stability.

• Every Clip (Part Ⓖ) installing in same step must be at the same height.

(2) Install Steel Shelf (part Ⓐ) onto the Clip Groups.

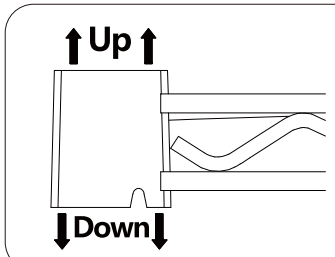

NOTICE:
Keep the gap in collar face downwards.

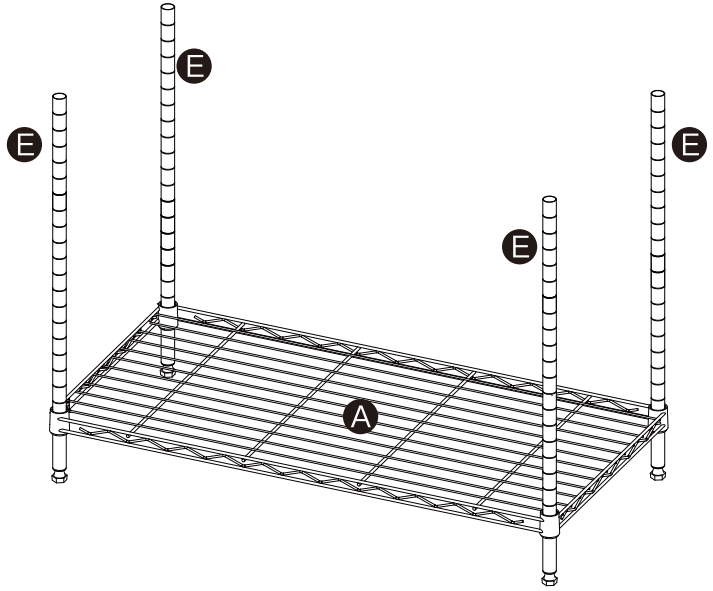

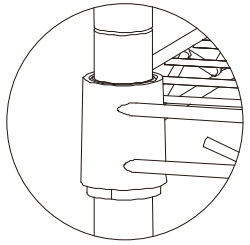

NOTICE:
Make sure the steel shelf is fully knocked as shown.

Step 3 Install (part B) on part (E).

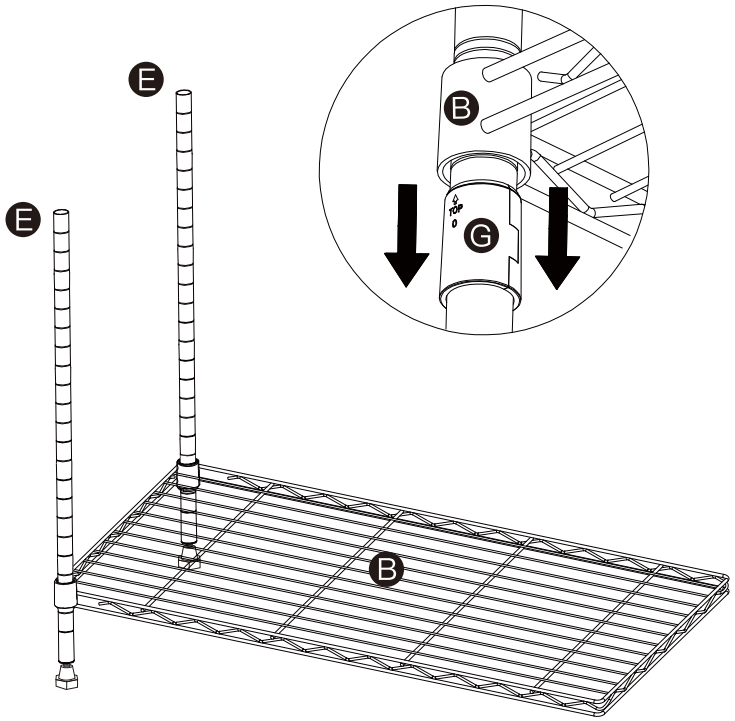

Step 4 Connect part A with part B by part D.

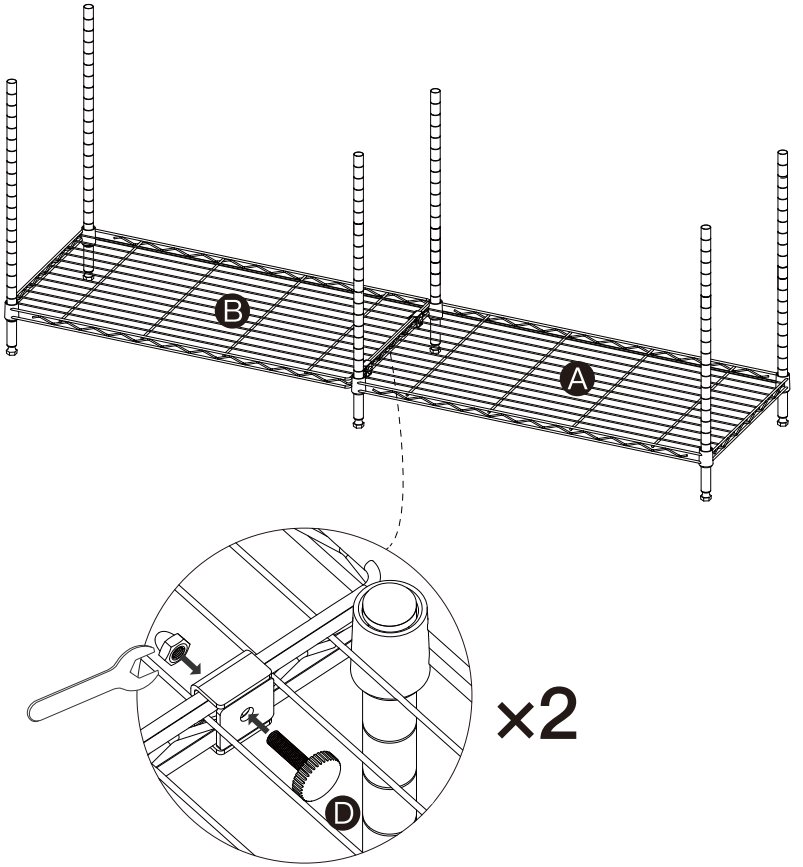

NOTICE:
For better overall stability, please keep the distance between 2 hooks as further as possible.

Step 5 Install part Ⓐ & Ⓑ onto Lower Poles (part Ⓔ).

(1) Lock Clips (part Ⓖ) as shown below.

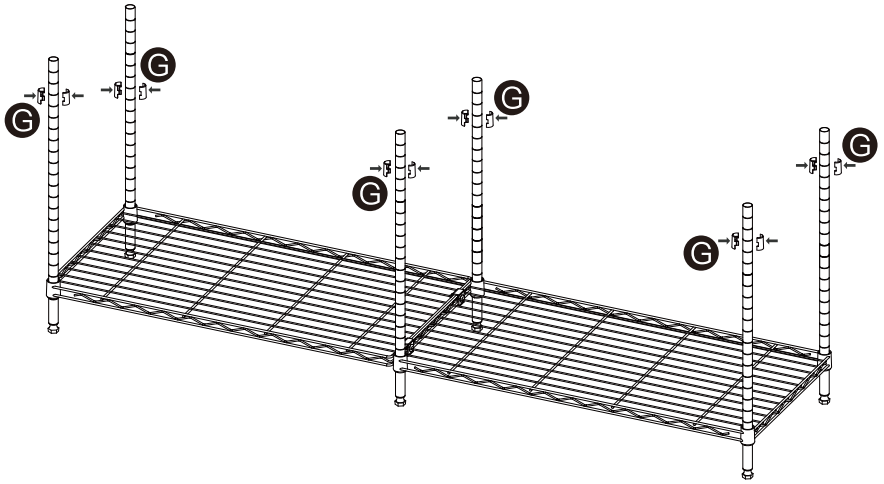

(2) Install part Ⓐ & Ⓑ onto Lower Poles (part Ⓔ) with part Ⓓ .

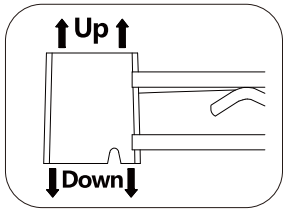

Keep the gap in collar face downwards.

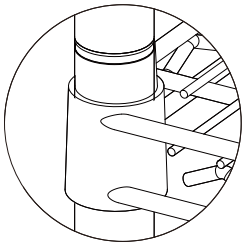

Make sure the steel shelf is fully knocked as shown.

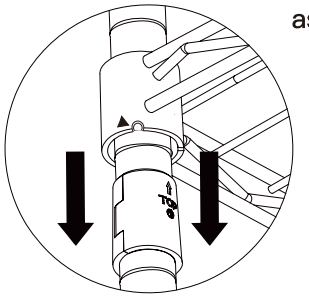

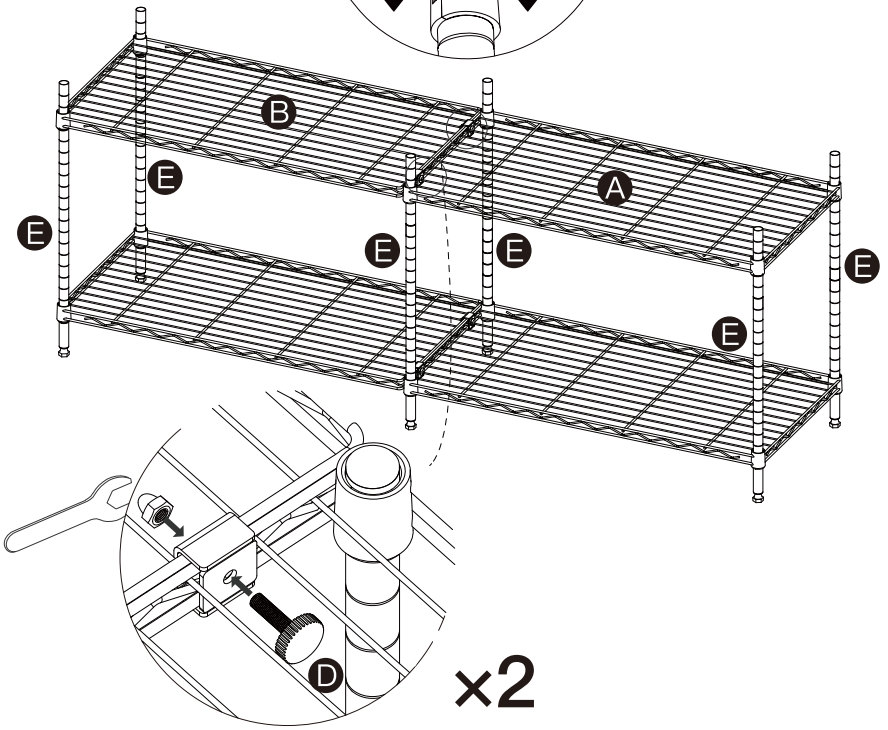

Step 6

Connect part E with part F .

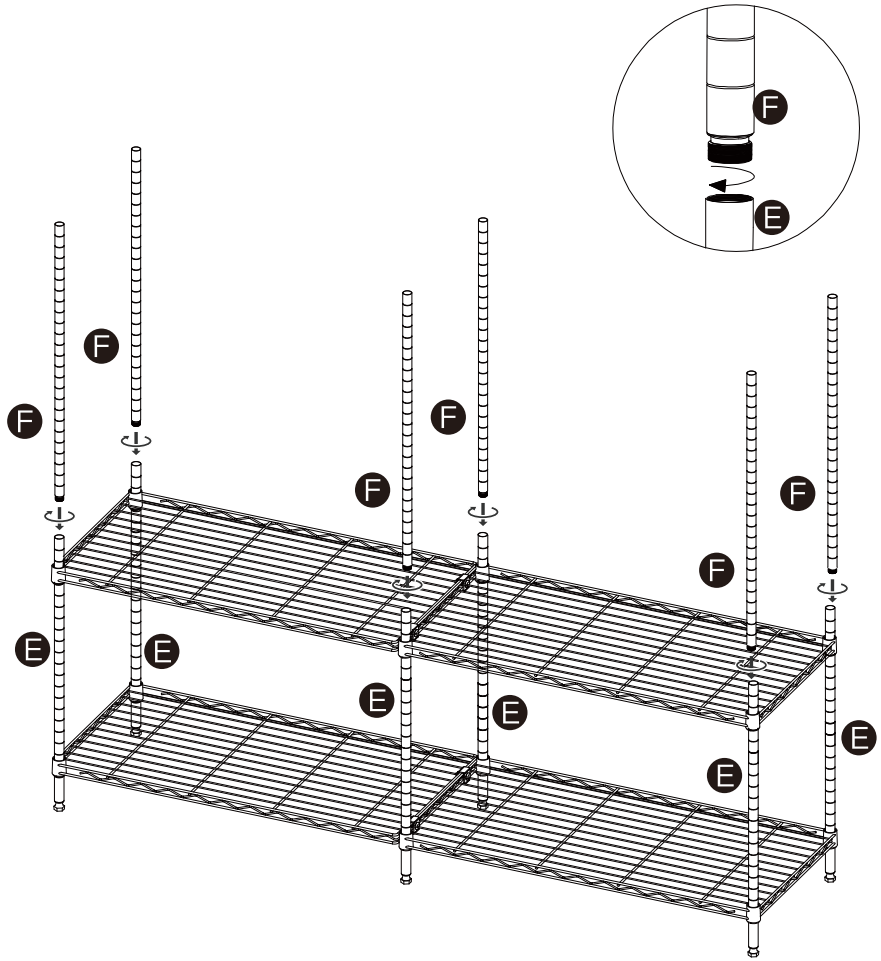

Step 7

Install part A & B onto Upper Pole (part F).

(1) Lock Clips (part G) as shown below.

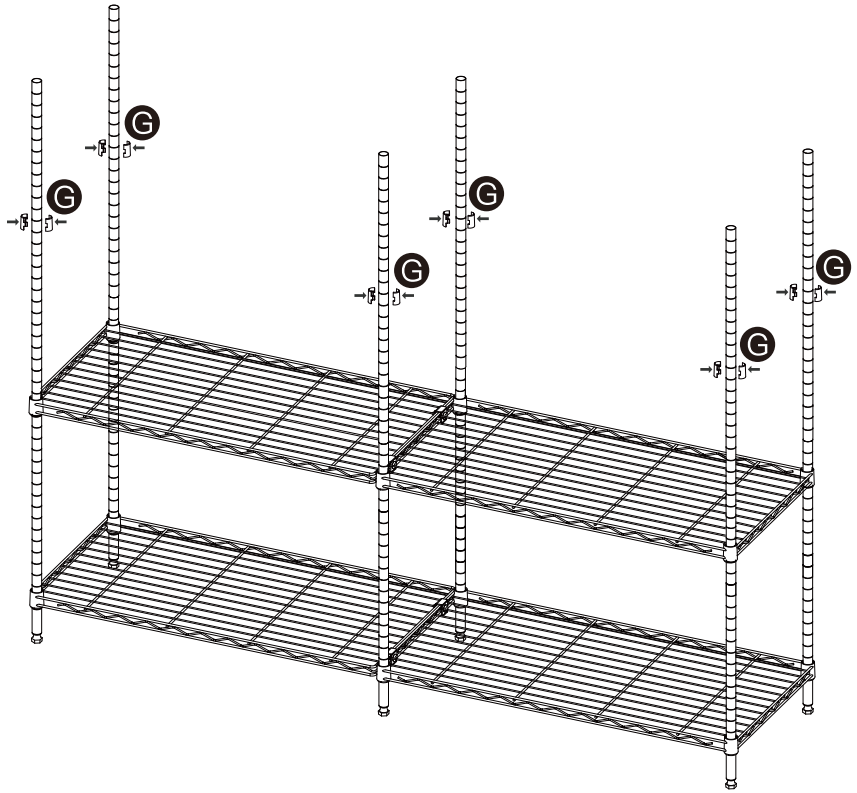

(2) Install part Ⓐ & Ⓑ onto Upper Poles (part Ⓕ) with part Ⓓ.

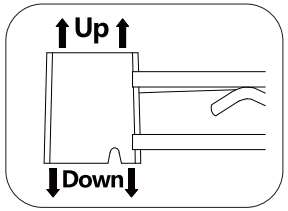

Keep the gap in collar face downwards.

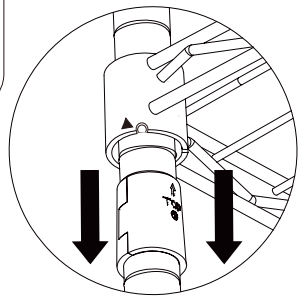

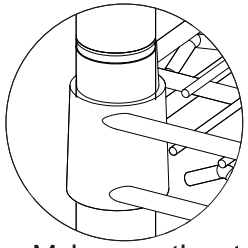

Make sure the steel shelf is fully knocked as shown.

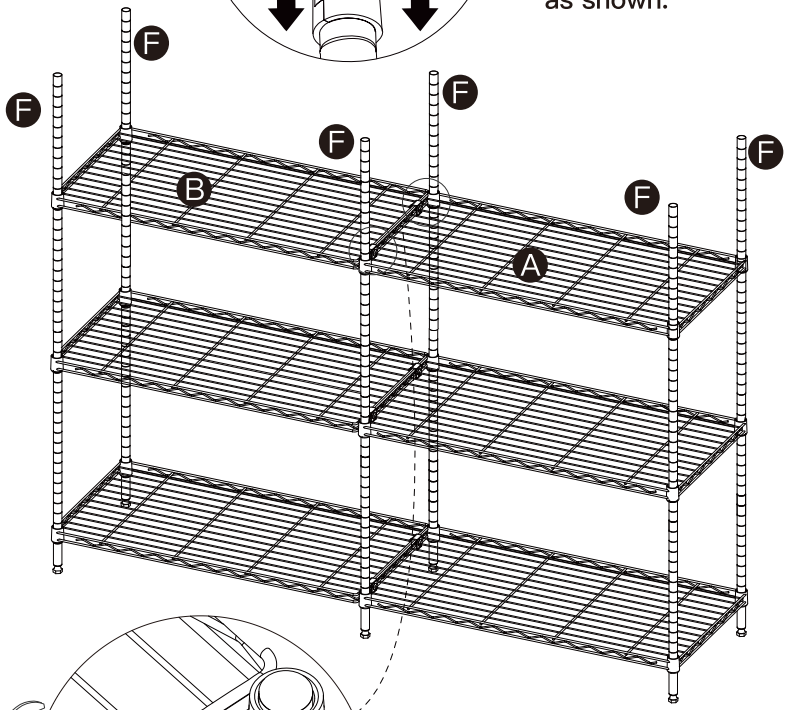

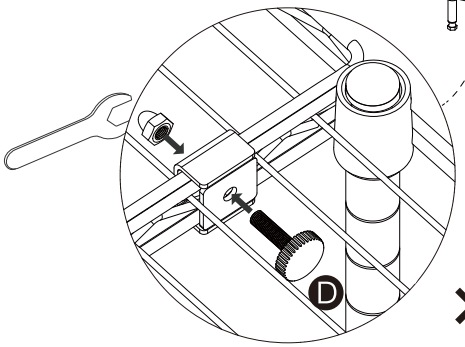

×2

Step 8 Install part Ⓐ & Ⓑ onto Upper Poles (part Ⓕ).

(1) Lock Clips (part Ⓖ) as shown below.

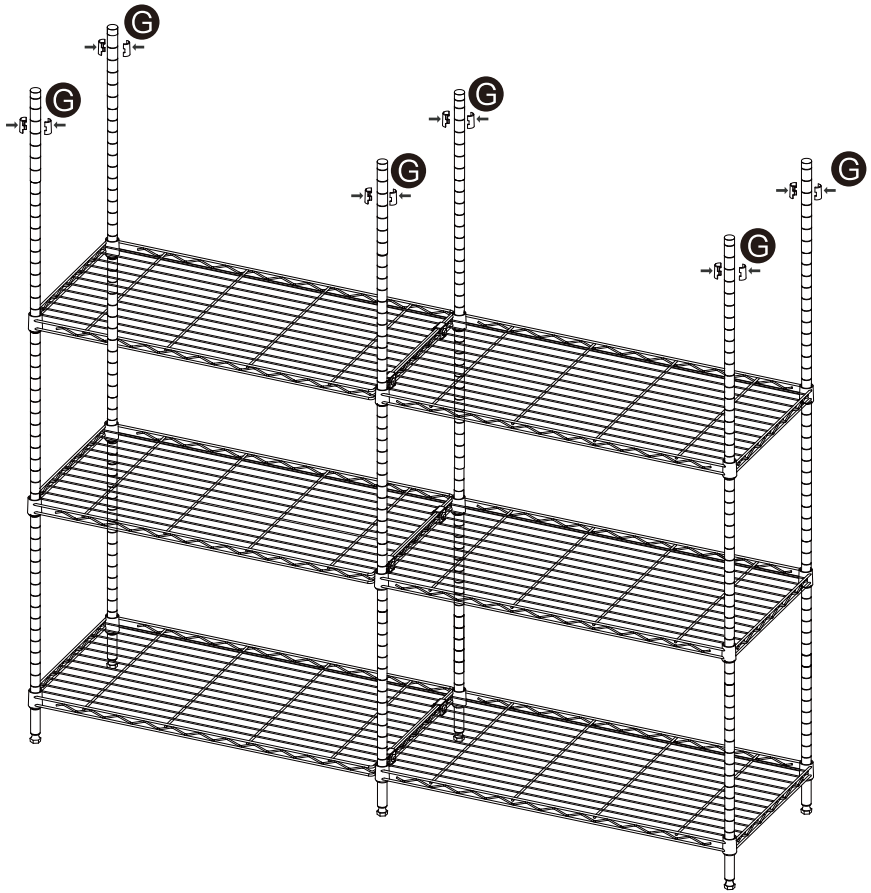

(2) Install part A & B onto Upper Poles (part F) with part D .

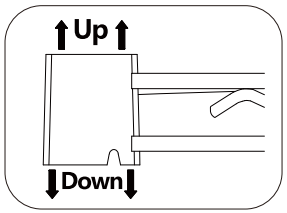

Keep the gap in collar face downwards.

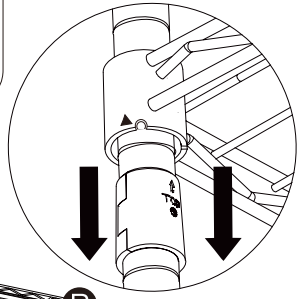

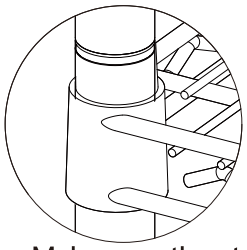

Make sure the steel shelf is fully knocked as shown.

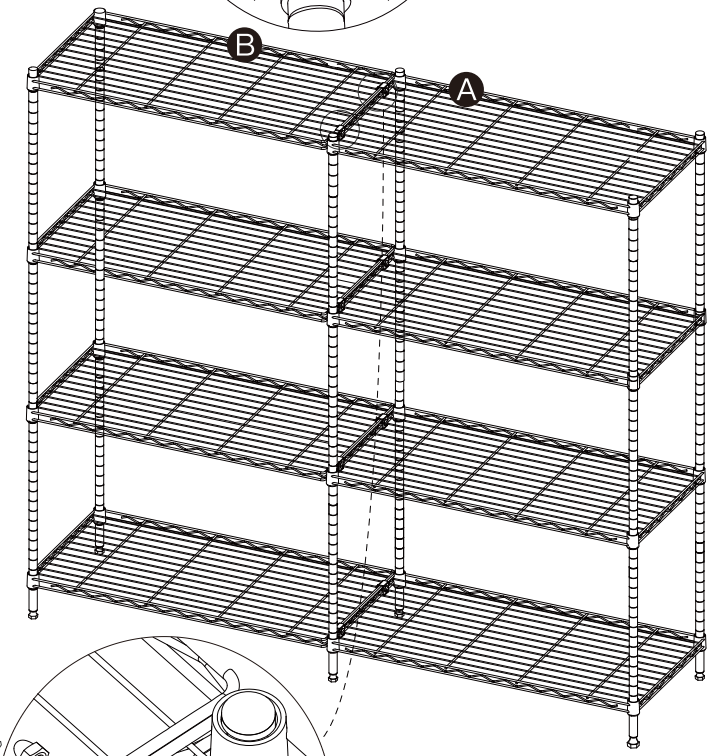

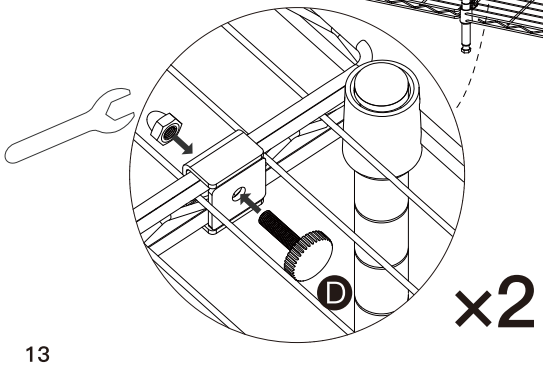

×2

Step 9 Install (part H) to keep the rack more stable.

NOTICE:

1.For the safety of you and your family, it is necessary to install Anti–Tip Kit.

2.Before installing the Anti–Tip Device Kit, please mark the location of bolt hole.

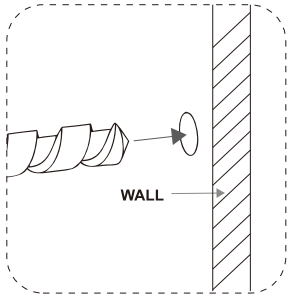

(1)Drill holes at marked location.

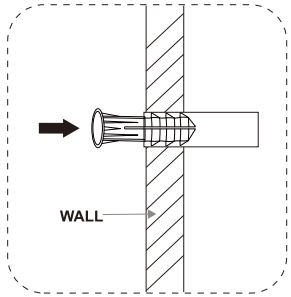

(2)Press the protective bolts in the wall.

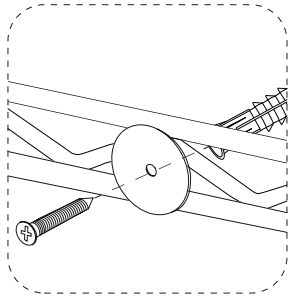

(3)Fix the safety lock on the wall with bo–lts & shims.

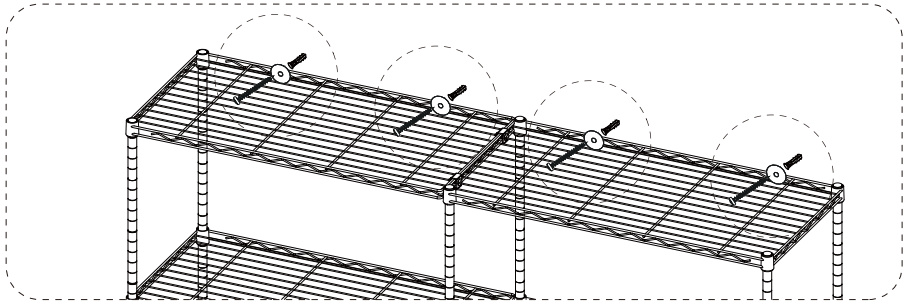

(4)For better overall stability, please keep the distance between 2 Anti–Tip Device Kit as further as possible.

CARE AND MAINTENANCE

Never use abrasive or acid-based cleaners on the shelf rack. Clean shelves and rods with a solution of mild detergent and water. Use a soft cloth or sponge to wipe parts. Rinse and dry thoroughly. Keep surfaces dry and clean for a longer lasting finish.

NOTICE

Please read and understand these instructions before attempting to assemble, operate or install the product.

-Two adults required for a safe assembly.

-Do not allow children to climb or play in or around the shelves.

-Assemble on a soft surface, such as carpeting to avoid scratching the finish.

PREPARATION

1.Before beginning assembly of product, make sure all parts are present. If any part is missing or damaged, do not attempt to assemble the product.

2.Estimated Assembly Time: Approximately 15 -25 minutes.

3.Helpful Tools (not included):Rubber Mallet.

4.Decide on the shelf location before beginning the assembly.Once the Product is assembled,it is very dificult to move a shelf without taking the entire assembly apart and starting over.

5.No Tools Required for Assembly.

TYPE-B INSTALLATION

Step 1 Learn to install Clips on poles.

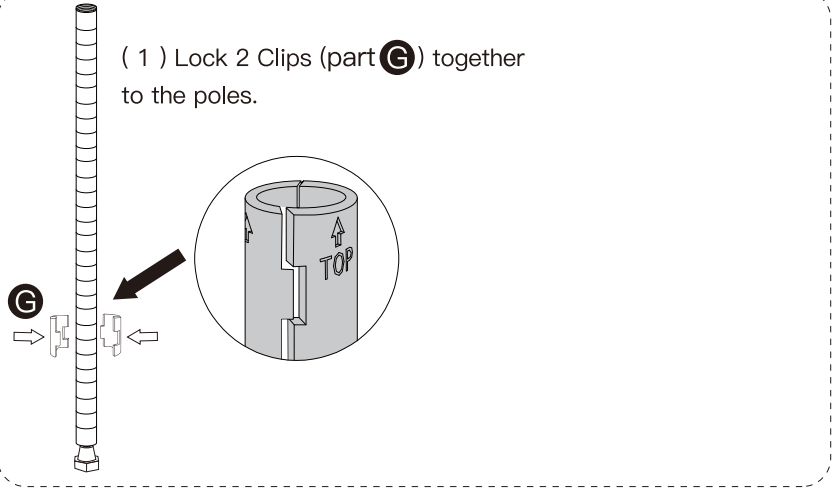

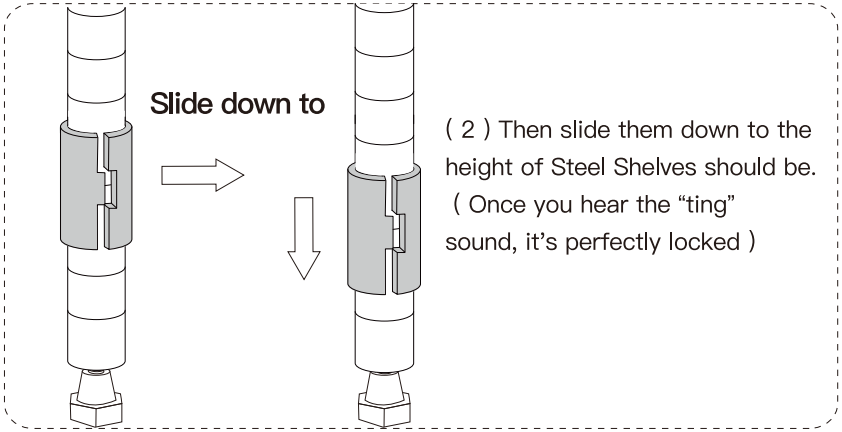

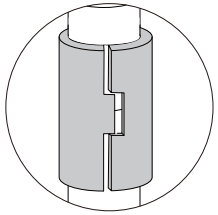

Note:

There is a gap between 2PCS plastic clips assembled onto the poles as shown in the picture, this is a structural design rather than a quality issue, which aims to bind the shelves firmly onto the pole.

Step 2 Install (part A) on part (E).

(1) Lock Clips (part G) on 6 Lower Poles (part E).

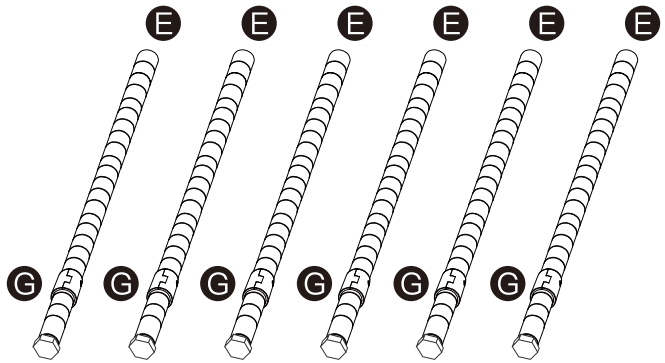

NOTICE:

• Please install the clips as lower as possible to ensure the shelf is closer to the ground for better stability.

• Every Clip (Part G) installing in same step must be at the same height.

(2) Install Steel Shelf (part A) onto the Clip Groups.

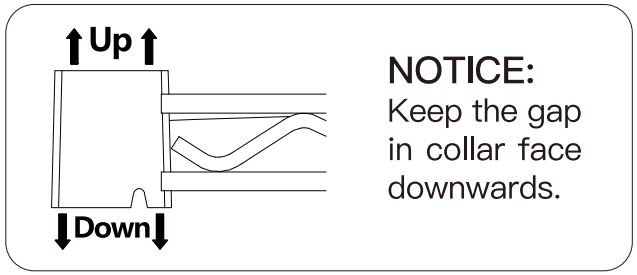

NOTICE:
Keep the gap in collar face downwards.

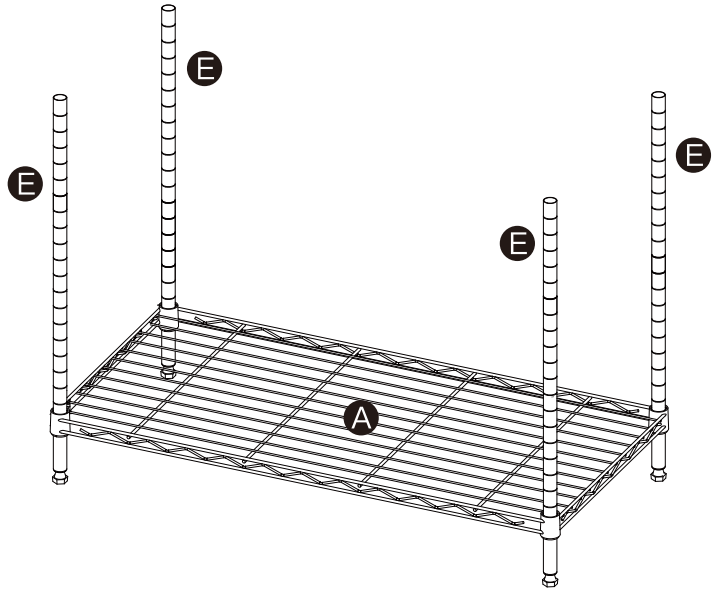

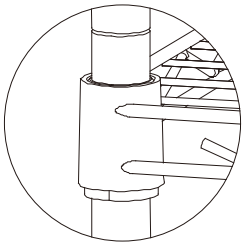

NOTICE:
Make sure the steel shelf is fully knocked as shown.

Step 3 Install (part B) on part (E).

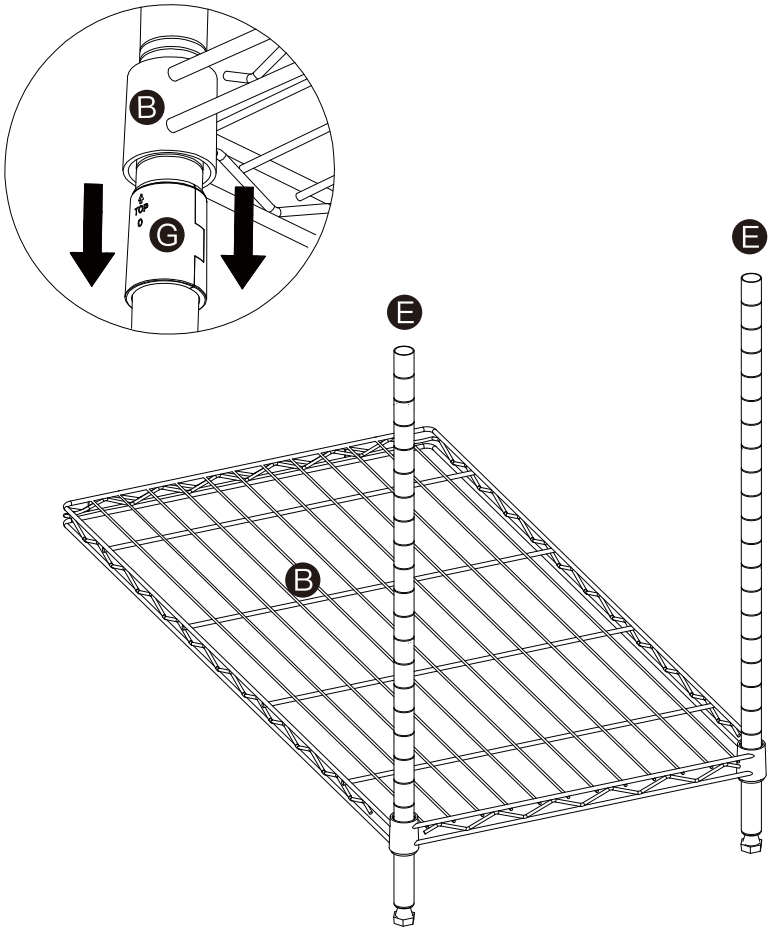

Step 4 Connect part A with part B by part D.

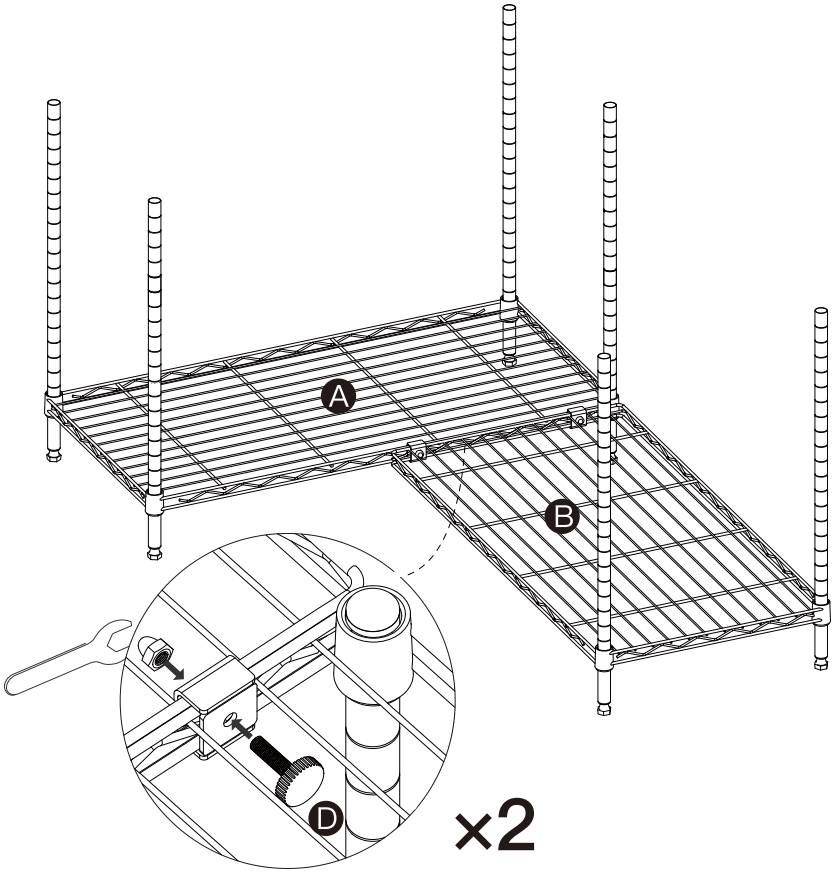

NOTICE:
For better overall stability, please keep the distance between 2 hooks as further as possible.

Step 5 Install part A & B onto Lower Poles (part E).

(1) Lock Clips (part G) as shown below.

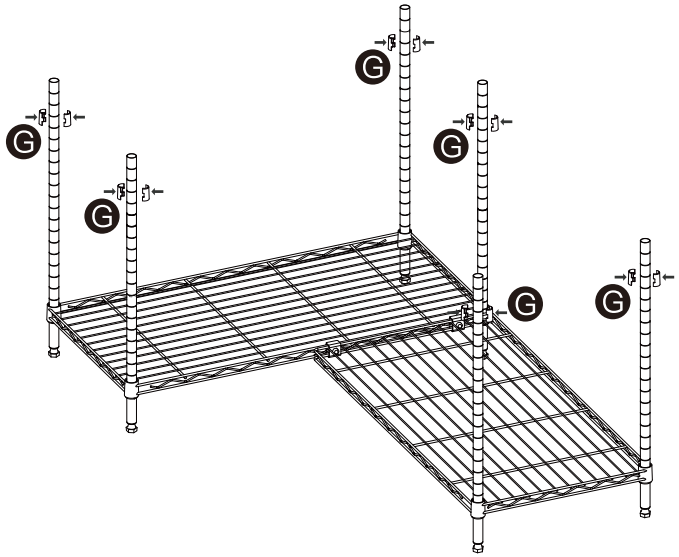

(2) Install part A & B onto Lower Poles (part E) with part D .

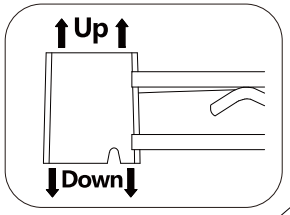

Keep the gap in collar face downwards.

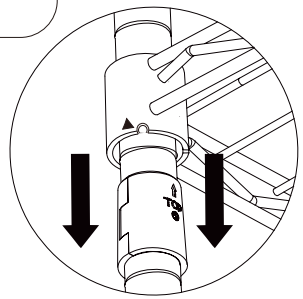

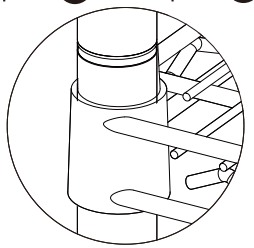

Make sure the steel shelf is fully knocked as shown.

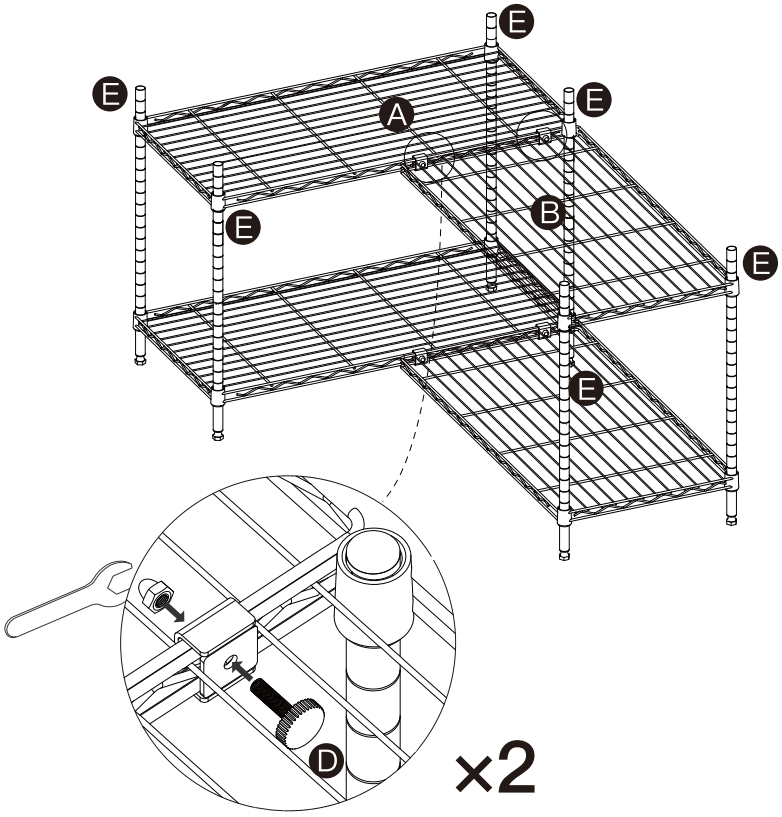

Step 6

Connect part E with part F .

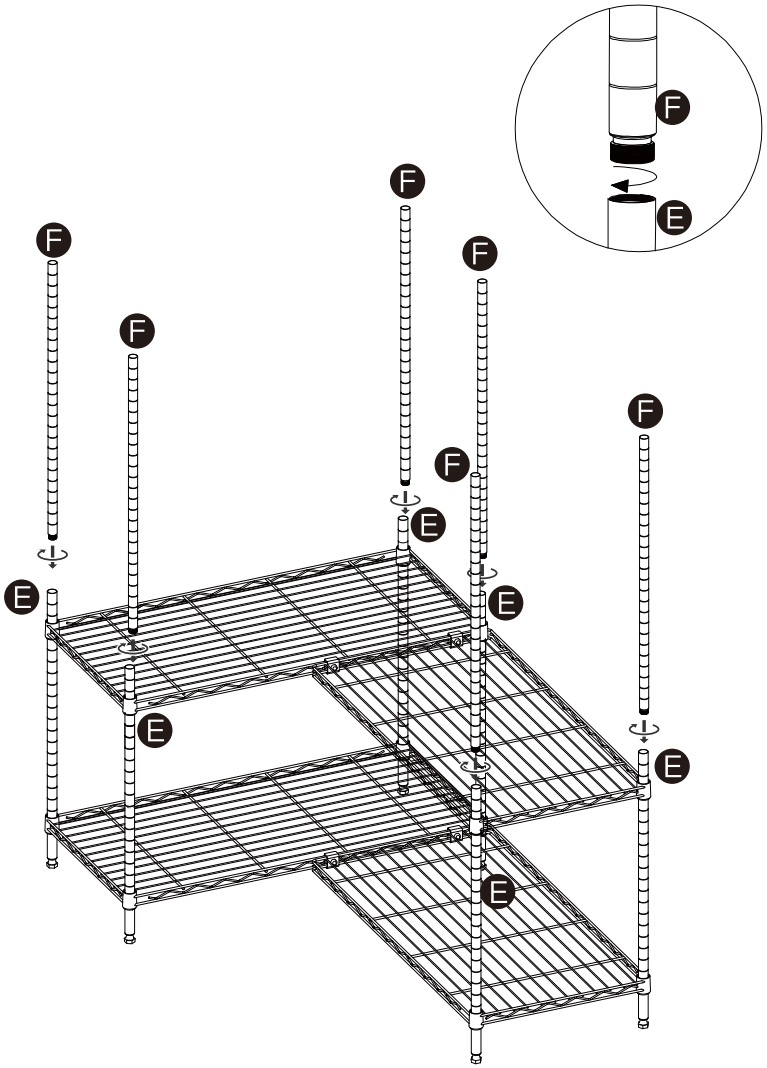

Step 7

Install part A & B onto Upper Poles (part F).

(1) Lock Clips (part G) as shown below.

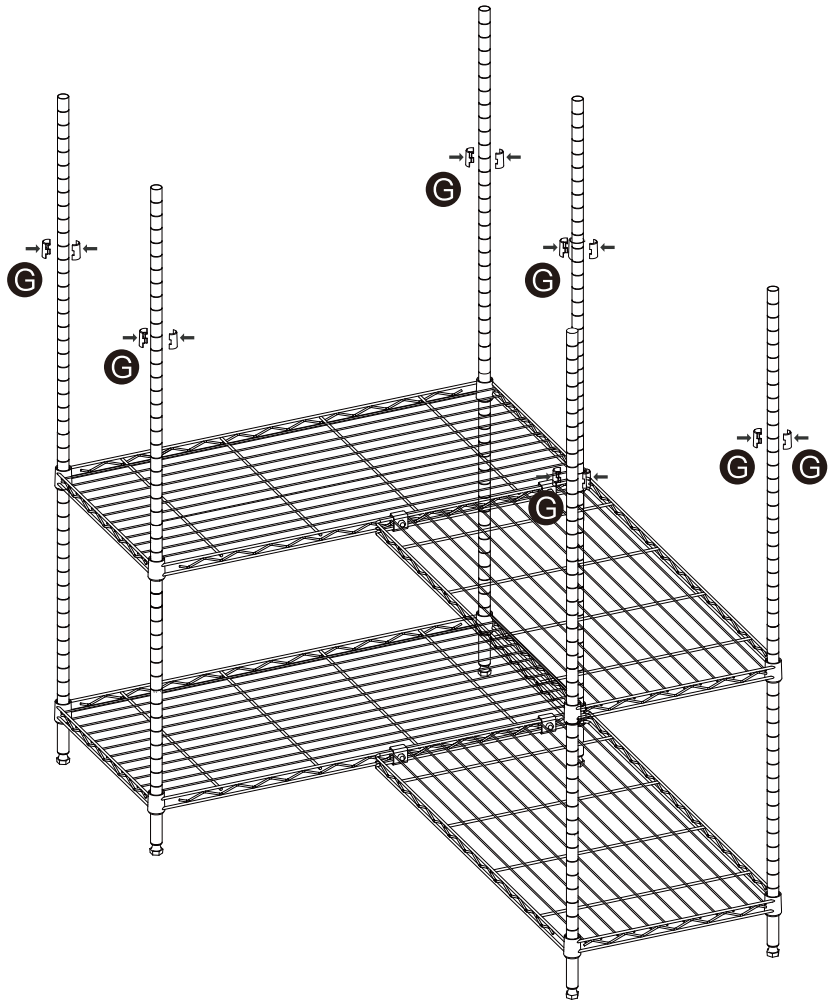

(2) Install part A & B onto Upper Poles (part F) with part D .

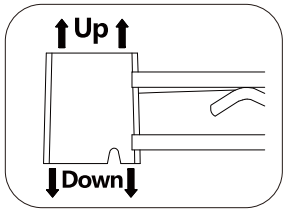

Keep the gap in collar face downwards.

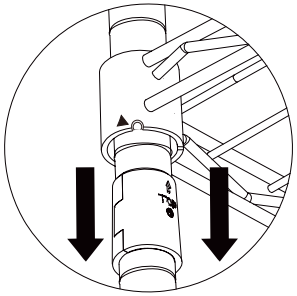

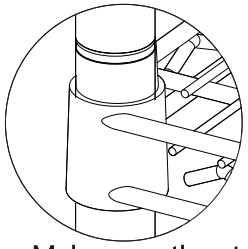

Make sure the steel shelf is fully knocked as shown.

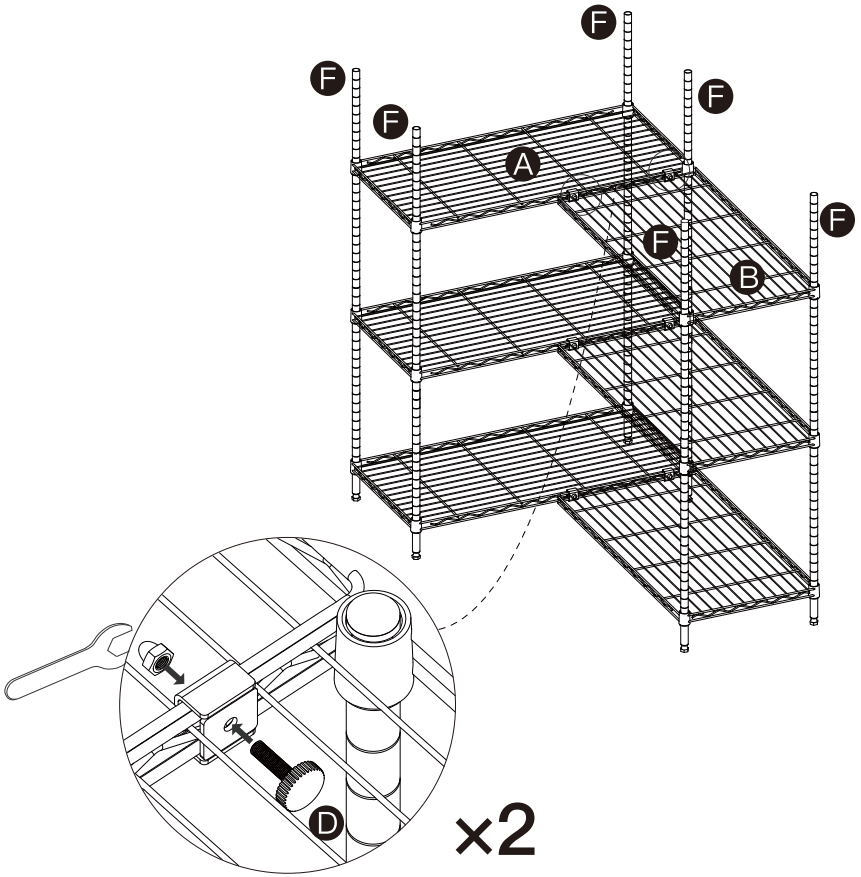

Step 8 Install part A & B onto Upper Poles (part F).

(1) Lock Clips (part G) as shown below.

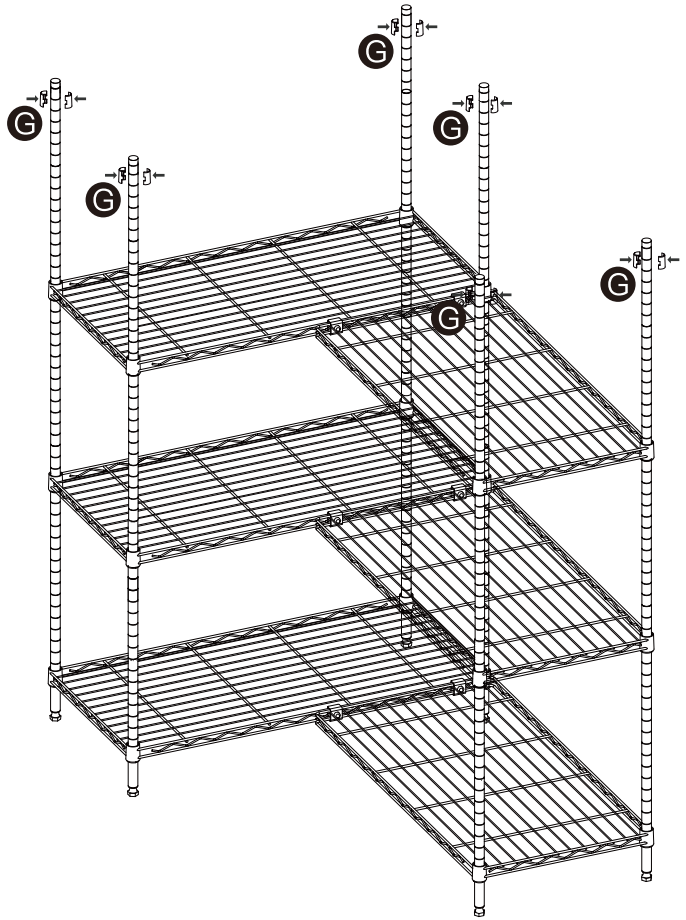

(2) Install part Ⓐ & Ⓑ onto Upper Poles (part Ⓕ) with part Ⓓ .

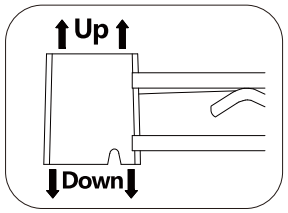

Keep the gap in collar face downwards.

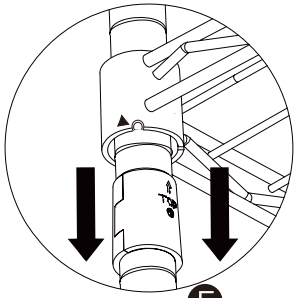

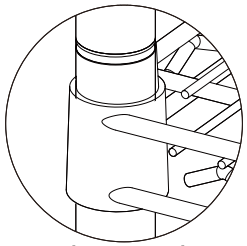

Make sure the steel shelf is fully knocked as shown.

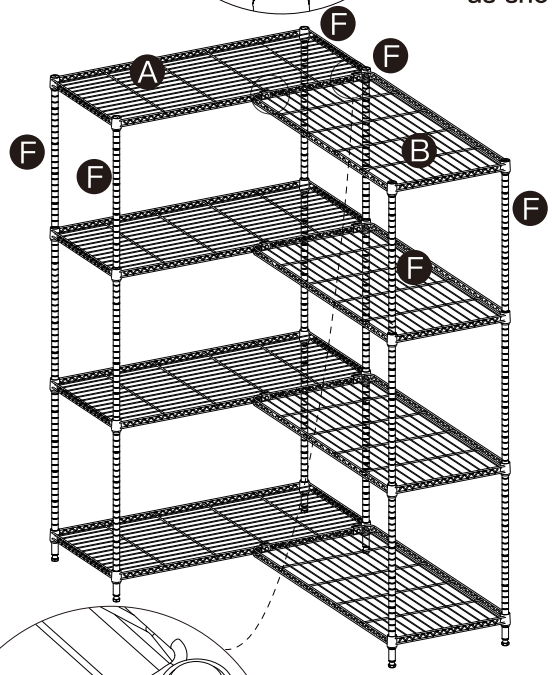

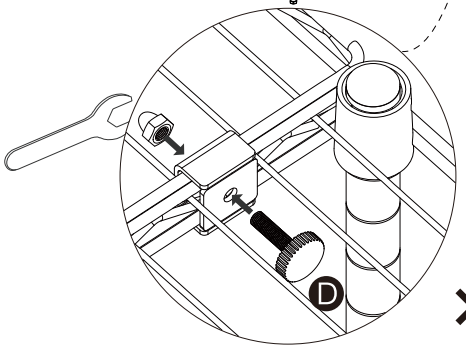

×2

Step 9 Install (part Ⓗ) to keep the rack more stable.

NOTICE:

1.For the safety of you and your family, it is necessary to install Anti–Tip Kit.

2.Before installing the Anti–Tip Device Kit, please mark the location of bolt hole.

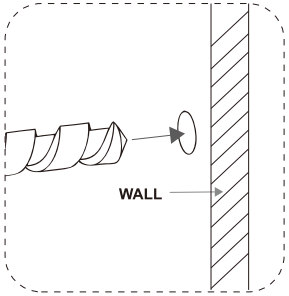

(1)Drill holes at marked location.

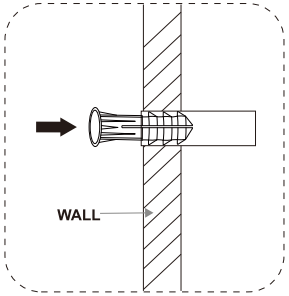

(2)Press the protective bolts in the wall.

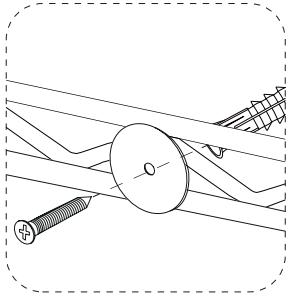

(3)Fix the safety lock on the wall with bo–lts & shims.

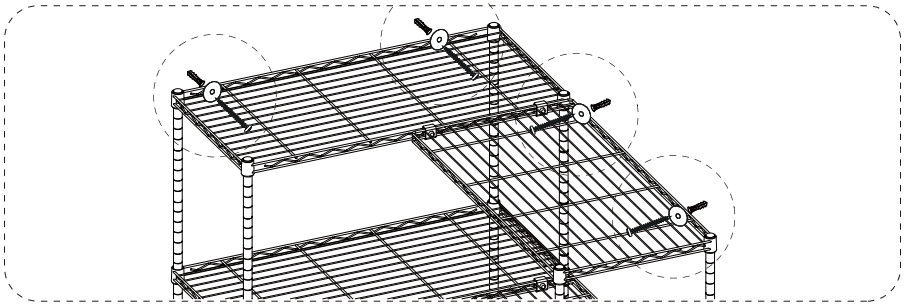

(4)For better overall stability, please keep the distance between 2 Anti–Tip Device Kit as further as possible.