CONTENTS

01	WARNING	01
02	SAFETY INFORMATION	01
03	ASSEMBLY PARTS AND TOOL	02
04	ASSEMBLY INSTRUCTIONS	03
05	LIMITED WARRANTY	11

WARNING

Please read the instructions carefully and follow the assembly steps.

To ensure proper assembly, please follow all steps and use all parts provided. Not following this warning may result in serious injury to you or others.

To prevent misalignments, keep the screws loose and do not tighten them until they are all in their correct positions.

Avoid overtightening or forcing the screws, as this could cause them to break, strip, or damage the threads of the holes.

Using the wrong size of screws for a particular part could cause damage to the screw or the part.

Please lubricate all moving parts regularly and tighten all bolts and screws every 6 months, or as needed.

SAFETY INFORMATION

WEIGHT CAPACITY FOR SEATING: 275 LBS (≈125 KG)



Sit in the center of the chair with your back against the backrest



Do not sit at the front edge of the chair



Do not stand on the chair



Do not use the chair with more than one person



Do not push the chair around when a person is sitting in it



Do not push down on the backrest when a person is reclined



Do not place all your weight on the backrest only

ASSEMBLY PARTS AND TOOL

PLEASE MAKE SURE ALL THE PARTS ARE INCLUDED.

MISSING PARTS?
support@colamyhome.com

A

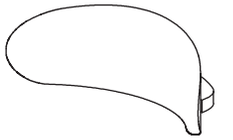

Backrest *1

B

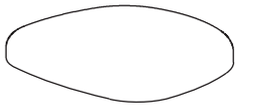

Seat Cushion *1

C-L

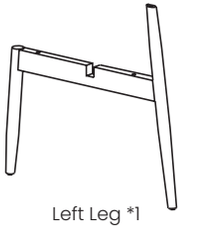

Left Leg *1

C-R

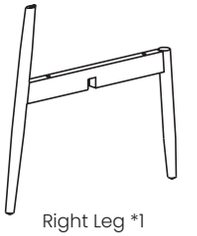

Right Leg *1

1



1/4" x 63mm Bolt *5

2



1/4" x 19mm Bolt *9

3



Spring Washer *5

4

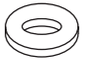

Flat Washer *5

5



Iron Plate *2

6

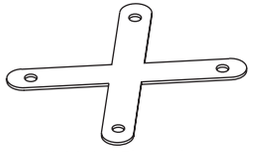

X-Metal Plate *1

7

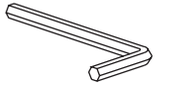

Allen Wrench *1

BEFORE YOU GET STARTED, A FEW POINTERS:

Having a friend to help makes assembly extra-easy.

Please use the included wrench instead of an ELECTRIC HAND DRILL in case of damage to the product.

ASSEMBLY INSTRUCTIONS

Note: Please do not 100% tighten all the screws until the chair is fully assembled, just 50% is OK, make it has space to adjust the chair.
Note: Make sure the elliptical iron parts on the legs keep the correct direction, detailed line-drawing for your reference.

STEP 1 Connect Left leg (C-L) and Right Leg (C-R), align their grooves and press down until fixed.
Note1: Legs (C) are marked with Letter "L" (left) or "R" (right) to show which sides they should be placed on.
Note2: When Left Leg (C-L) and Right Leg (C-R) are crossed and positioned correctly, the distance between the front legs should be 390mm–410mm. If the measurement falls between 455mm–475mm, it indicates incorrect installation.

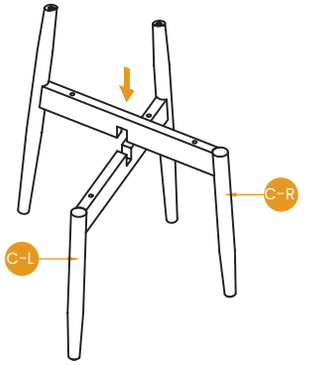

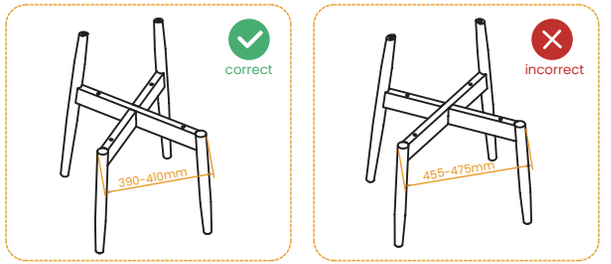

ASSEMBLY INSTRUCTIONS

STEP 2 Attach two Iron Plate (5) to the legs, align the screw holes on legs, and using two 19mm Bolts (2), then tighten by Allen Wrench (7).
Note1: The concave side must face upward for correct installation; if the raised side faces upward, it is incorrect.
Note2: The Iron Plate (5) must be tightly attached to the cut surface of the chair leg to be considered properly installed.
Note3: After both Iron Plate (5) are installed, the two holes on the plates must align to ensure correct assembly.

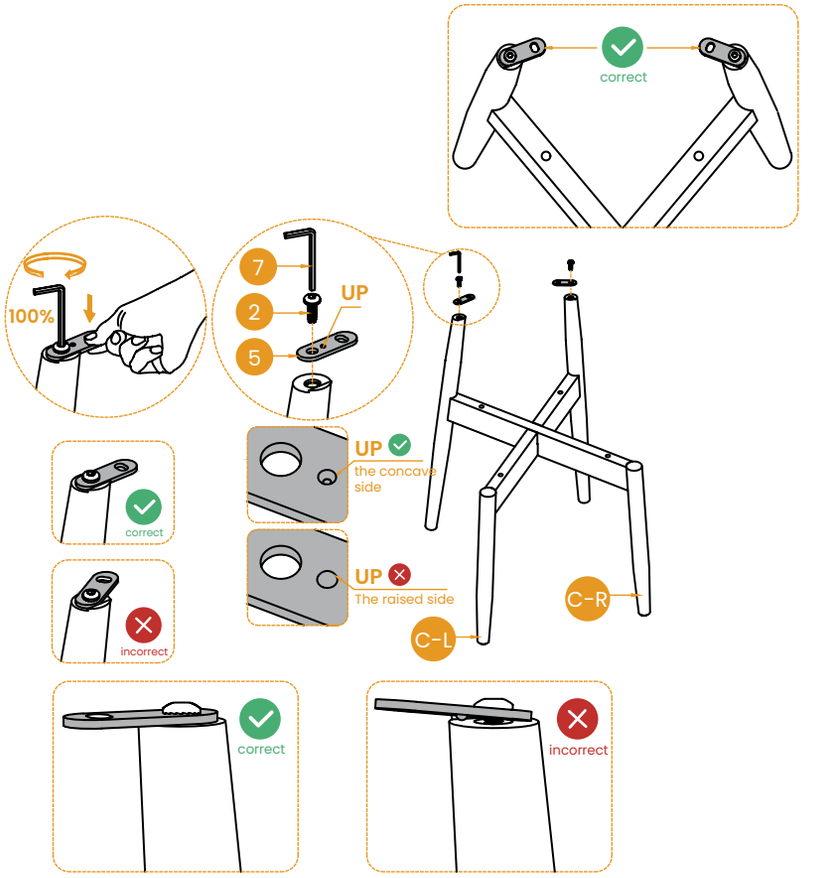

ASSEMBLY INSTRUCTIONS

STEP 3 Place the finished leg frame upside down on the ground.

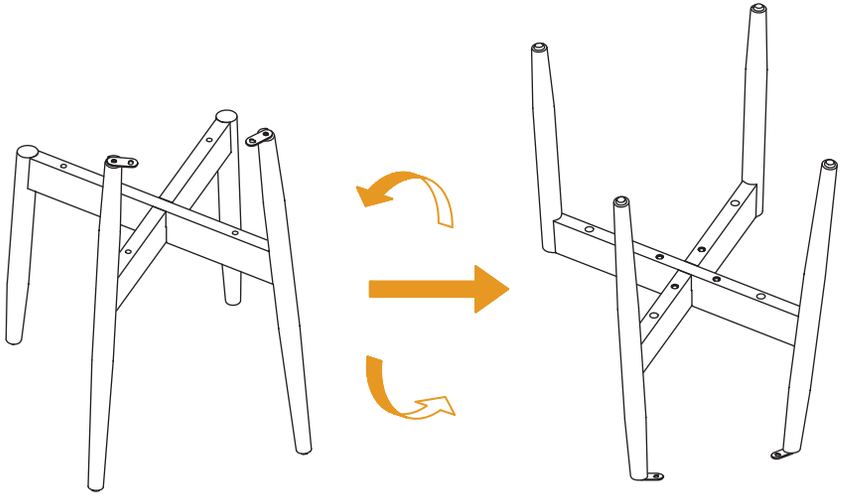

STEP 4 Put X-Metal Plate (6) on the bottom of the legs cross connection, tighten four 19mm Bolts (2) by Allen Wrench (7).

Note: Please tighten to 70%.

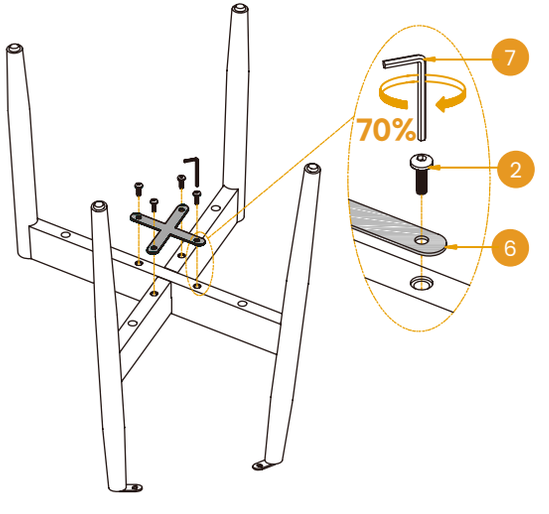

ASSEMBLY INSTRUCTIONS

STEP 5 Attach Backrest (A) to the finished base, using two 19mm Bolts (2), tighten by Allen Wrench (7).

Note: Please tighten to 100%.

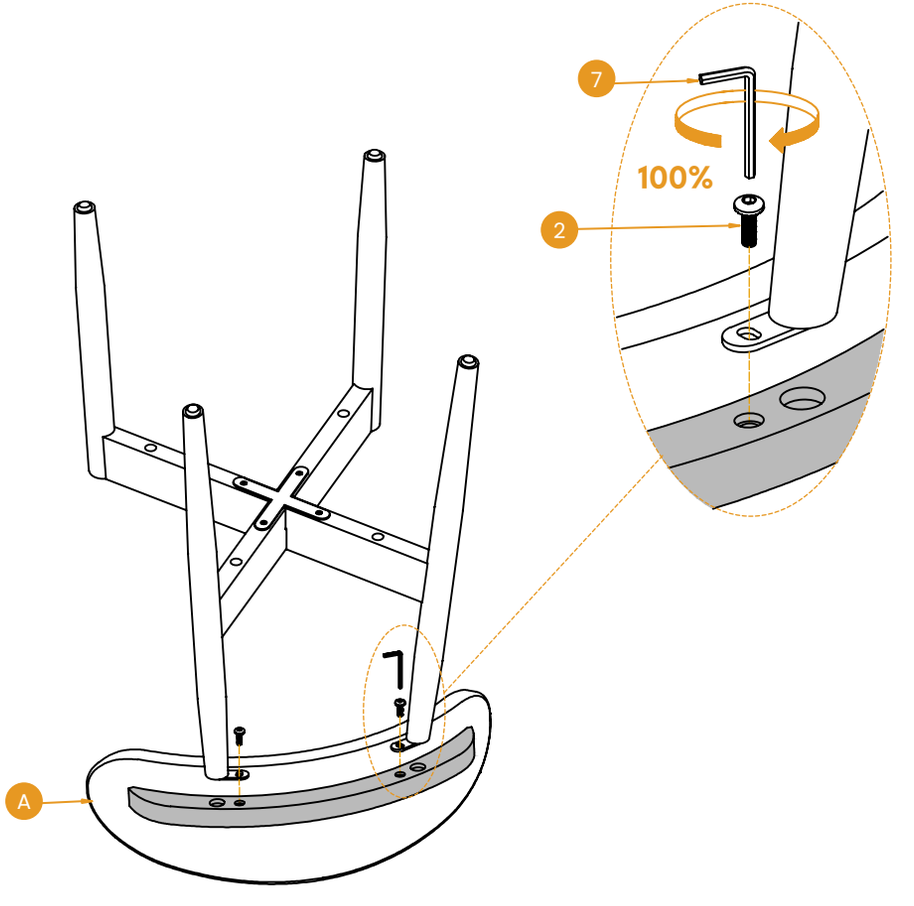

ASSEMBLY INSTRUCTIONS

STEP 6 Attach Seat Cushion (B) to the finished chair frame, using four 63mm Bolts (1), Spring Washer (3) and Flat Washer (4), tighten by Allen Wrench (7).

Note: Please tighten to 100%.

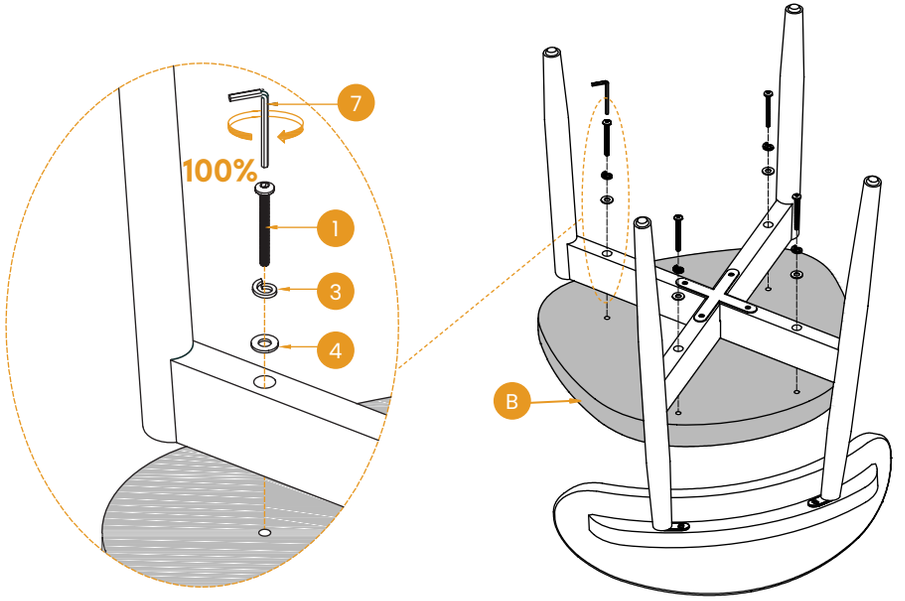

ASSEMBLY INSTRUCTIONS

STEP 7 Tighten the bolts in Step 4 to 70%–100%.

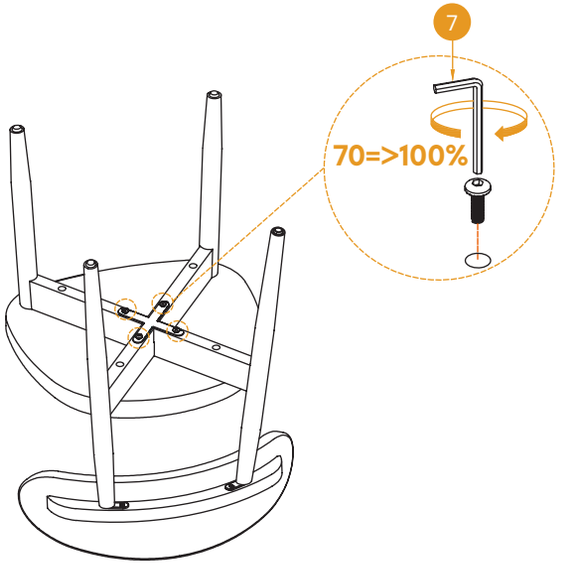

ASSEMBLY INSTRUCTIONS

STEP 8 Adjust the foot nails to level the chair.

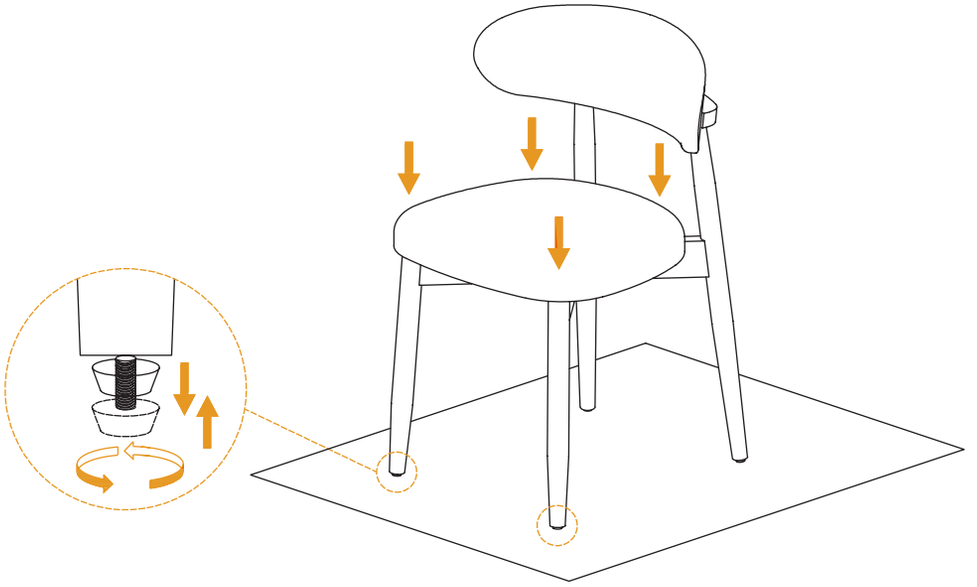

ASSEMBLY INSTRUCTIONS

STEP 9 Now, your chair is successfully installed.

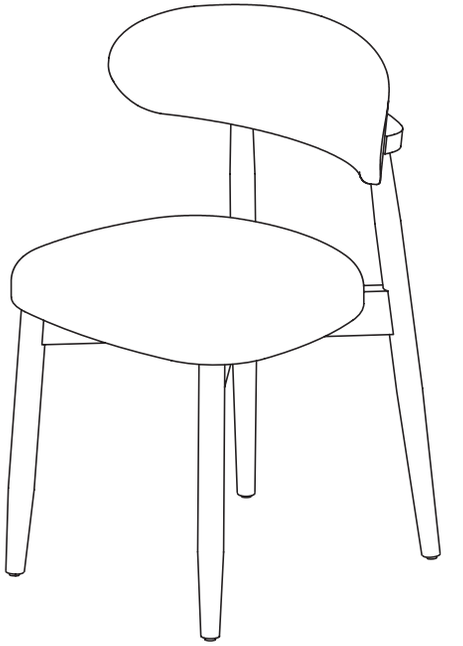

LIMITED WARRANTY

COLAMY promises to repair or replace any COLAMY chair that is found to be defective in material or workmanship within one year from the date of original purchase, as long as you, the original purchaser, still own it. This is your sole and exclusive remedy under this warranty, subject to the provisions outlined below.

EXCLUSIONS

This warranty does not apply to, and no other warranty applies to:

- Normal wear and tear, which is to be expected over the course of ownership.
- Misuse, abuse, or excessive use of the product.
- Modifications or attachments to the product that are not approved by COLAMY.
- Products that were not installed, used, or maintained in accordance with the product instructions and warnings.
- Products used for rental purposes or unauthorized retail activities.

Seating Usage: Normal use for seating is defined as equivalent to a single shift, forty-hour (40) workweek. If the seating product is used in a manner exceeding this, the applicable warranty period will be proportionately reduced.

RETURN POLICY

We offer a 30-day return policy, meaning that all products purchased through this website may be returned to us within that timeframe. You must contact us within 30 days of receiving the product(s), and they must be returned to us without any undue delays.

CONDITIONS:

- Returned products must be in the same condition as received and returned in their original packaging.
- If the product is not faulty (i.e., if you change your mind or are unhappy with the product for another reason), you are responsible for the cost of return shipping. You must ensure the package arrives safely to us, so we recommend using a courier service that offers tracking.

LIMITED WARRANTY

- If the product is faulty when received, please contact us, and we will assist you with the return, covering the shipping costs in this case.
- We reserve the right to offer partial refunds for returned products that are not in unused condition, are damaged, or have missing parts not due to our error.

HOW RETURNS WORK

To request a return, please fill out the contact form on our website and attach a copy of your invoice as proof of purchase, along with the reason for the return.

We will provide the return address for the product as soon as possible. Once the returned product is received and inspected, we will provide a specific resolution.

If the return is approved, the refund amount will be automatically credited to your original payment method.

MAINTENANCE INSTRUCTIONS



Dust and clean up spills immediately using a clean, non-colored, lint-free cloth.



Use a mild soap solution and a damp cloth to remove stains.



Do not place hot items directly on the furniture surface without using a protective barrier.



For indoor use only. Do not place the furniture outside.



Do not place furniture in direct sunlight.



Do not write on the furniture surface without a padded barrier to protect it.



Do not clean furniture with harsh cleaners or polishes.



Do not place furniture near heating or cooling vents (keep at least 3 feet away)

YouTube | ASSEMBLY VIDEO

colamyhome.com
support@colamyhome.com
+1(888) 886-1743