LED Outdoor Patio Umbrella

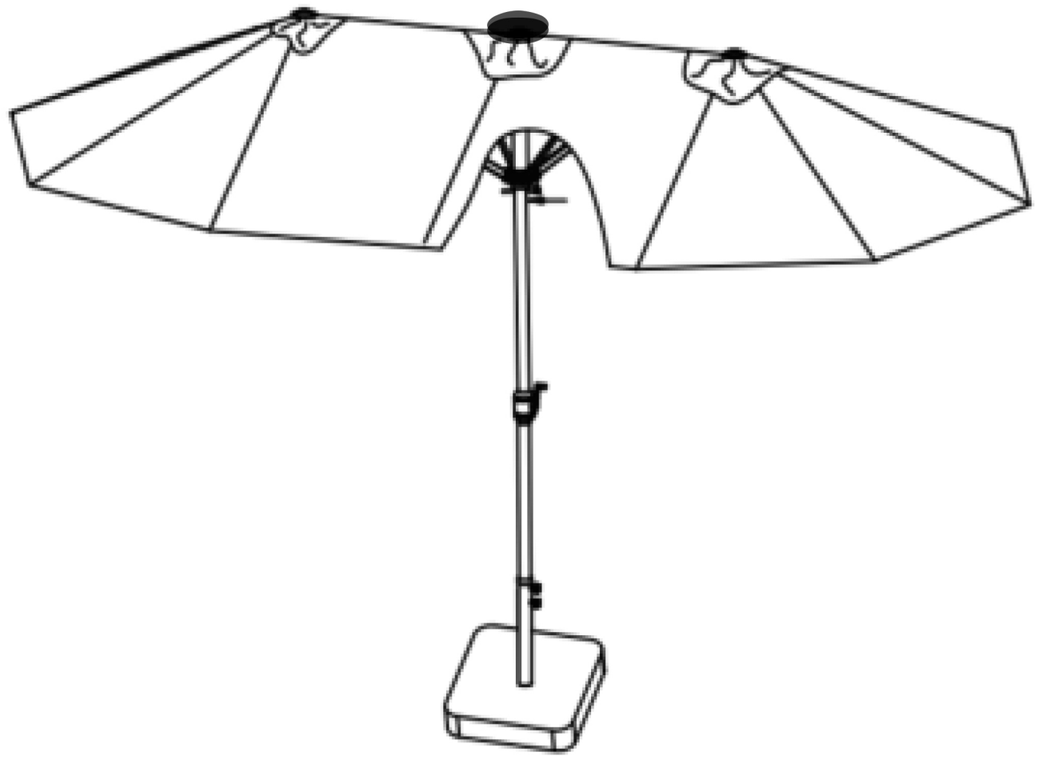

INSTRUCTION MANUAL

IF YOU PURCHASED THE PATIO UMBRELLA AND HAVE
ANY QUESTIONS OR CONCERNS
QUESTONS OR CONCERNS
PLEASE CONTACT US

Note before installation

WARNING:

1. Do not use the umbrella or umbrella base on a soft, muddy or sandy surface

2. Umbrella base requires 100kgs in order to work properly.

3. Umbrella may not withstand high winds, To avoid injury or damage, do not use in high windconditions, Always retract umbrella when not in use, Umbrella base must be filled to capacityin order to work properly.

Please Note

Carefully and throughly read the instructions before and during assembly to ensure properinstallation of the unit, We strongly recoumend you to keep this manual for regular revierand future reference.

ATTENTION:

1.Please check the manual carefully and make sure you have received all the parts

2. If there is any missing,please let us know the letter of the parts you need.

3. If there is any damage, please send clear photos to us, we will check and offer you best solution soon.

Storage:

1.Before storing your umbrella, make sure it is completely dry and clean

2.Keep the umbrella in a dry and well-ventilated place to protect against mildew.

3. So that you can enjoy using your umbrella for a long time, only use very mild cleaningproducts on it. Then allow it to dry thoroughly. Mildew spots can be removed with a mildcleaning product. Never use cleaning products that contain solvents, as these will bleachand damage the material.

Tip: To avold damage, never use alkali or acidic cleaning products or steam cleaners to clearthe umbrella, To prevent material damage, remove any collected water from the canopy by eithe]draining off the water or by dismantling the umbrella,Please remember that your canopy iN0T 100% waterproof and that water can seep through the seams and/or the material. Yourumbrella protects you from the sun and is not a rain shelter.

Pre-assembly (continued)

Assemble the item on a soft, non-abrasive surface, such as carpet or cardboard to avoid damaging the item. Seek assistance to assemble bulky or heavy items.

NOTE: Identify all parts packed in the carton against the parts list.
Remove all the protective material carefully and DO NOT use a knife to prevent scratching the furniture.

PACKAGE CONTENTS

NOTE: Hardware not shown to actual size.

A X1



B X1

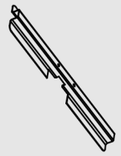

C X1



D X4
M8*20



E X4



F X1

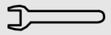

G X4

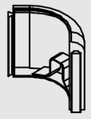

H X4



Pre-assembly (continued)

Assemble the item on a soft, non-abrasive surface, such as carpet or cardboard to avoid damaging the item. Seek assistance to assemble bulky or heavy items.

NOTE: Identify all parts packed in the carton against the parts list.
Remove all the protective material carefully and DO NOT use a knife to prevent scratching the furniture.

PACKAGE CONTENTS

NOTE: Hardware not shown to actual size.

J X2

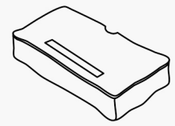

K X1

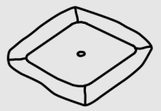

L X1

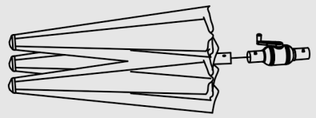

M X1

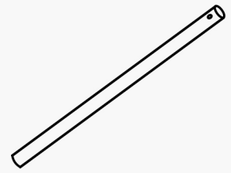

N X1



O X12



Assembly

1

	AX1
	BX1

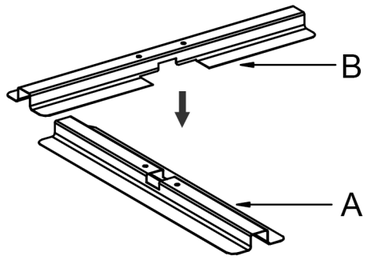

Cross together A and B.

2

	CX1
M8*20	DX4
	EX4
	FX1

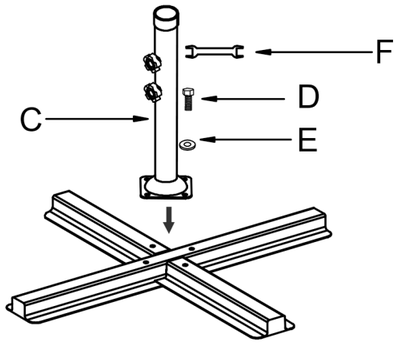

Install part C on the cross base and screw it intothe cross base, then fix them with part F part D and part E.

3

	GX4

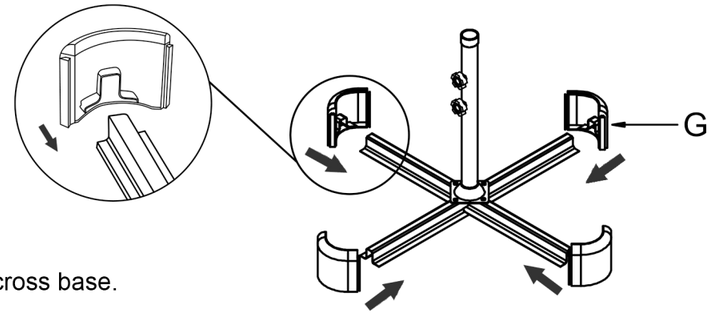

Install part G on the cross base.

Assembly

4

	HX4

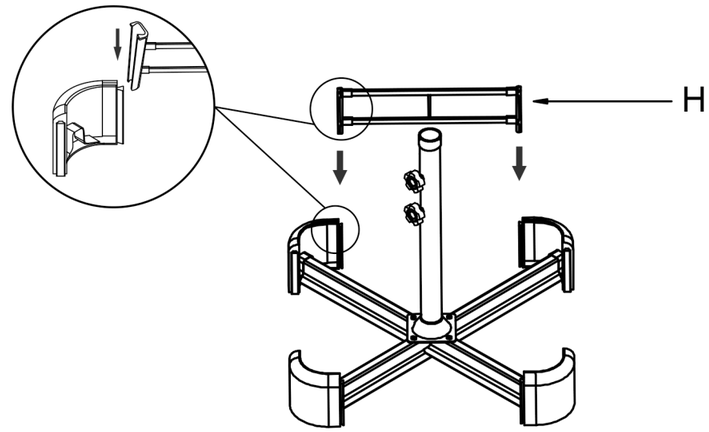

5

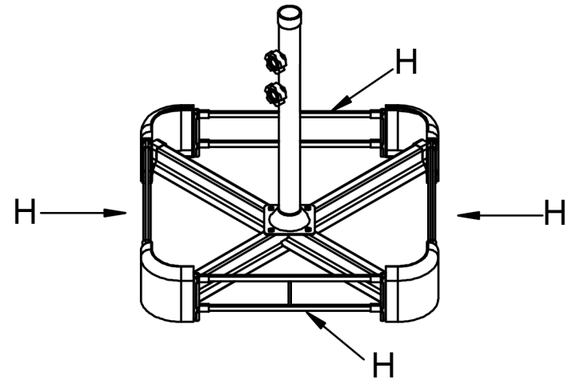

6

	JX2

For proper stability of your offset umbrella. The recommended minimum weight of the sand to be placed into each sand bag is 67.5lbs for a total of 135lbs.

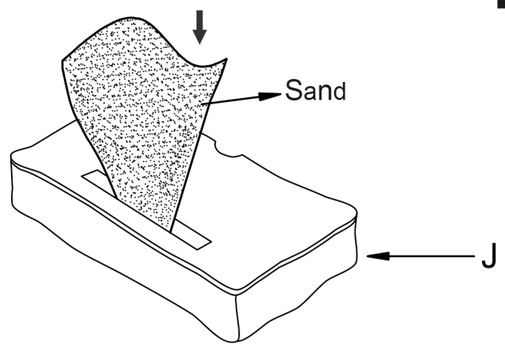

7

Install part K on the cross base.

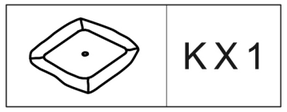

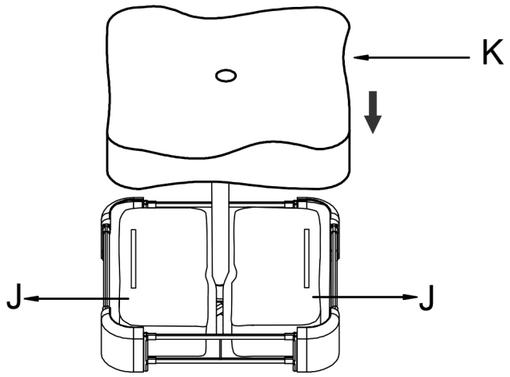

8

Metal hooks secure it in place.

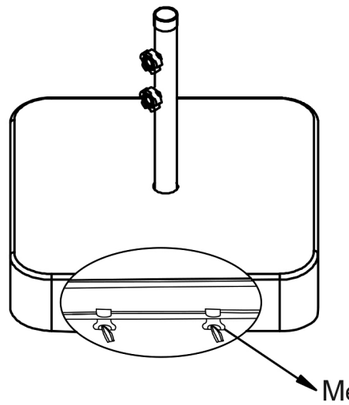

9

Fasten the L section to the handle.

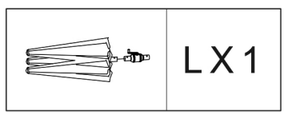

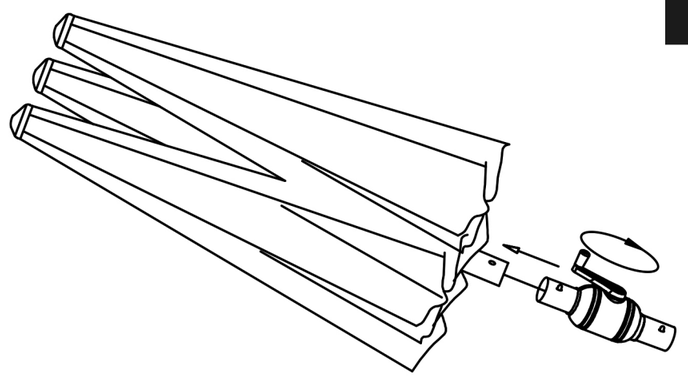

10

Hole position alignment.

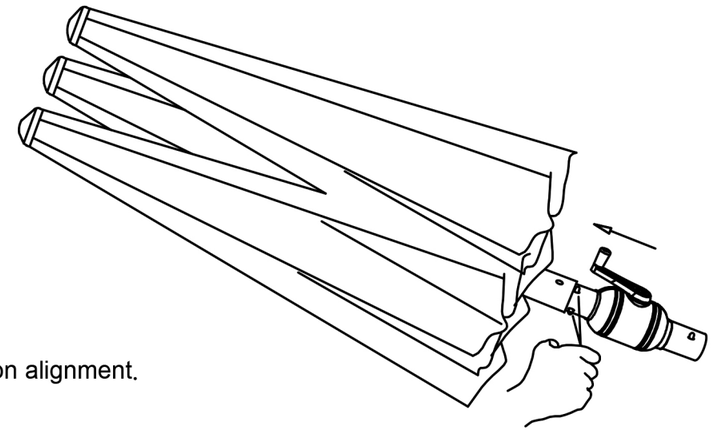

11

Align the holes at the handle M link.

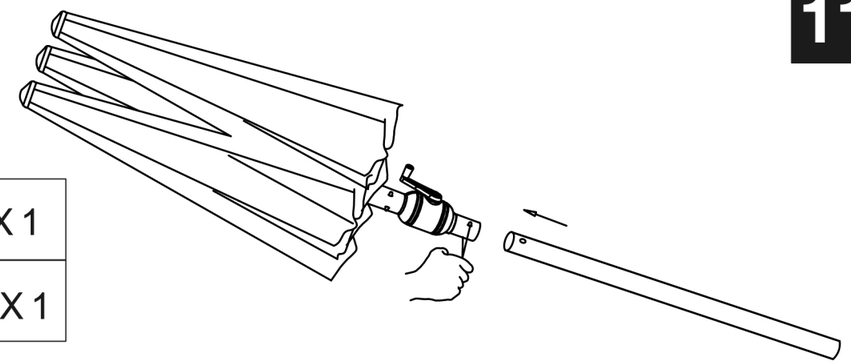

12

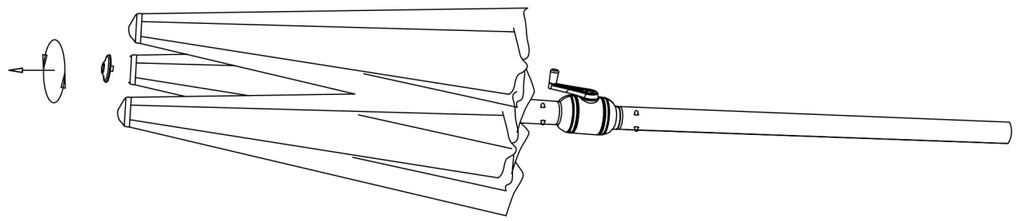

13

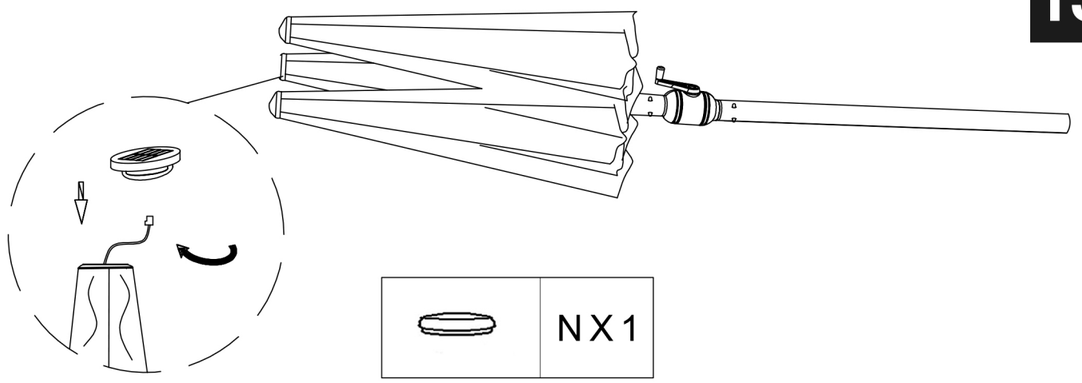

14



15

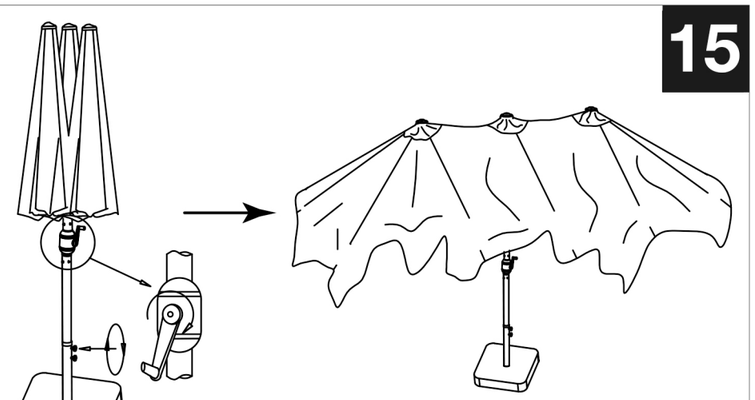

Secure each connection.

16

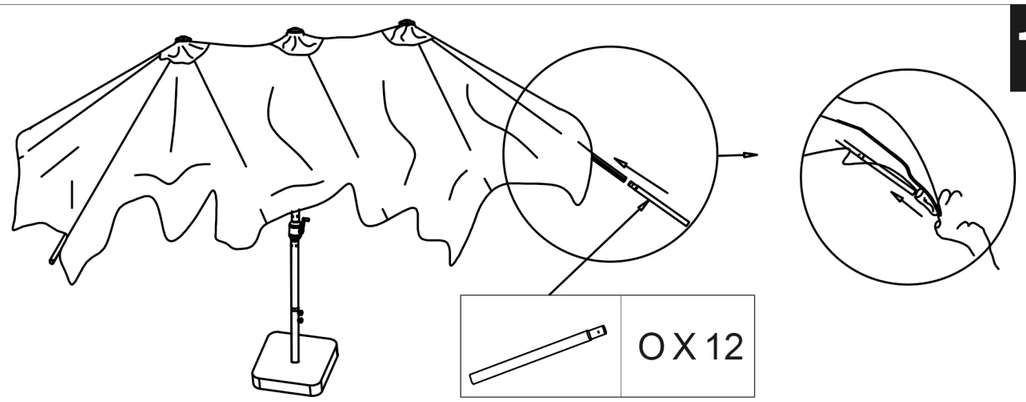

The O part of the umbrella ribs is fixed in place.

17

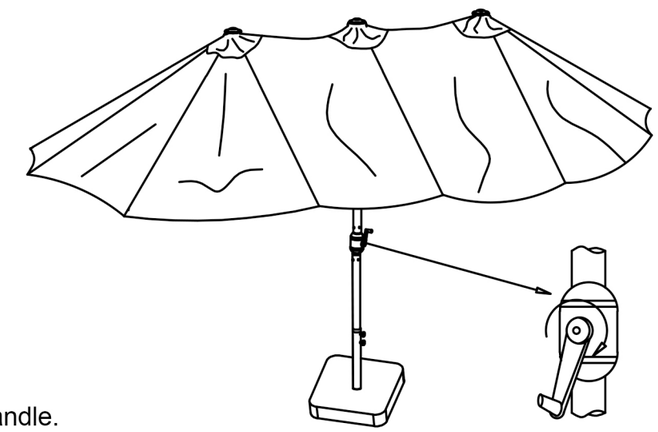

Rotating handle.

18

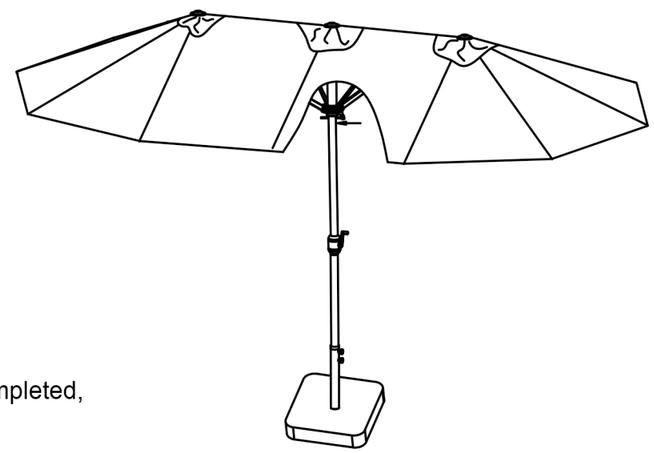

Installation completed,
umbrella open.

19

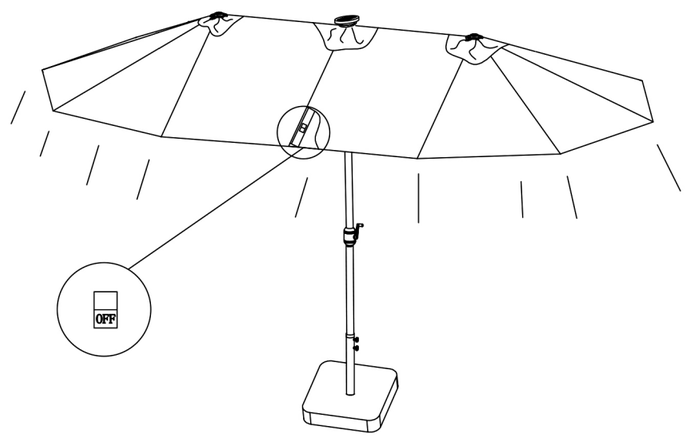

Cleaning and Maintenance

• To clean your canopy, use only mild liquid soap and water, and a soft sponge to loosen and dirt. Never use bleach or cleaning solvents as it will discolor your canopy. Use a mild soap and cloth to clean your aluminum or steel frame.

• When using an umbrella with a table, always make sure the protective ring is in the umbrella hole and the umbrella is secured using a sturdy umbrella base.

• We recommend that this product be closed and secured during high winds and heavy rain conditions.

• Powder coated steel is durable and will last for many years of seasonal use. It is recommended to touch up or repair any scratches to the paint surface to prevent rust.

• If you see rust, carefully sand the area using a fine sand paper and apply a rust resistant paint that closely matches the frame color.

• It is always recommended that an umbrella cover be used when not in use, as prolonged exposure to the sun’ s rays will eventually cause canopy fading or discoloring.