22"

22" Mirror

Diagrams with Dimensions

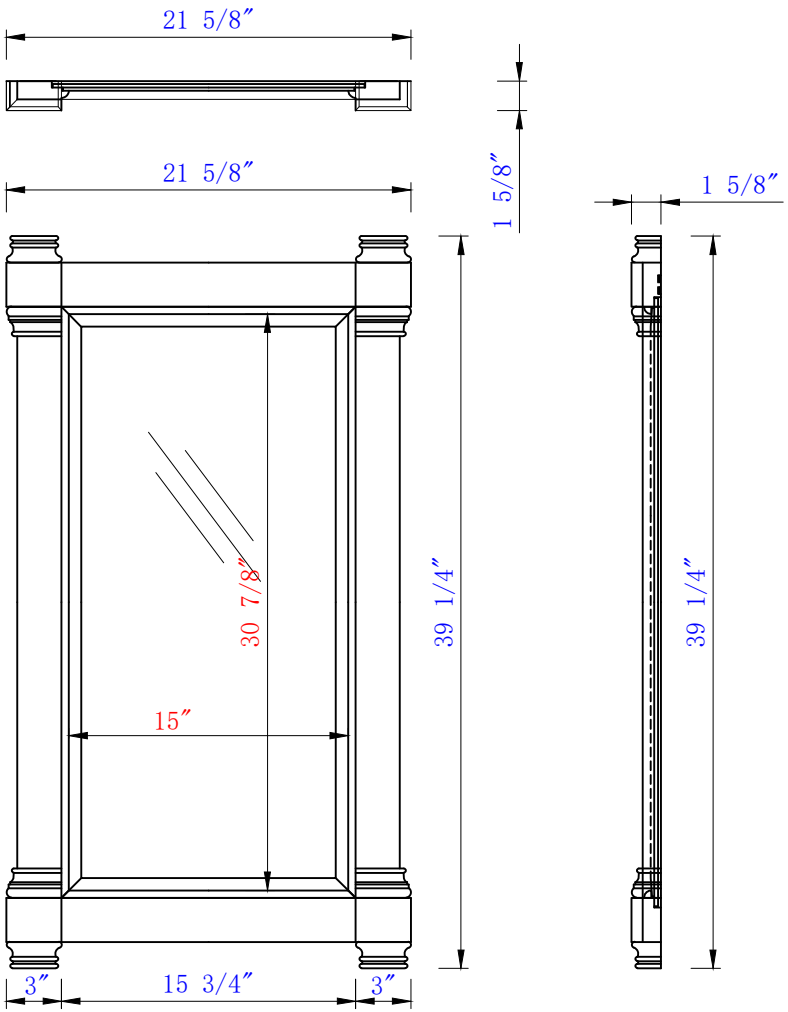
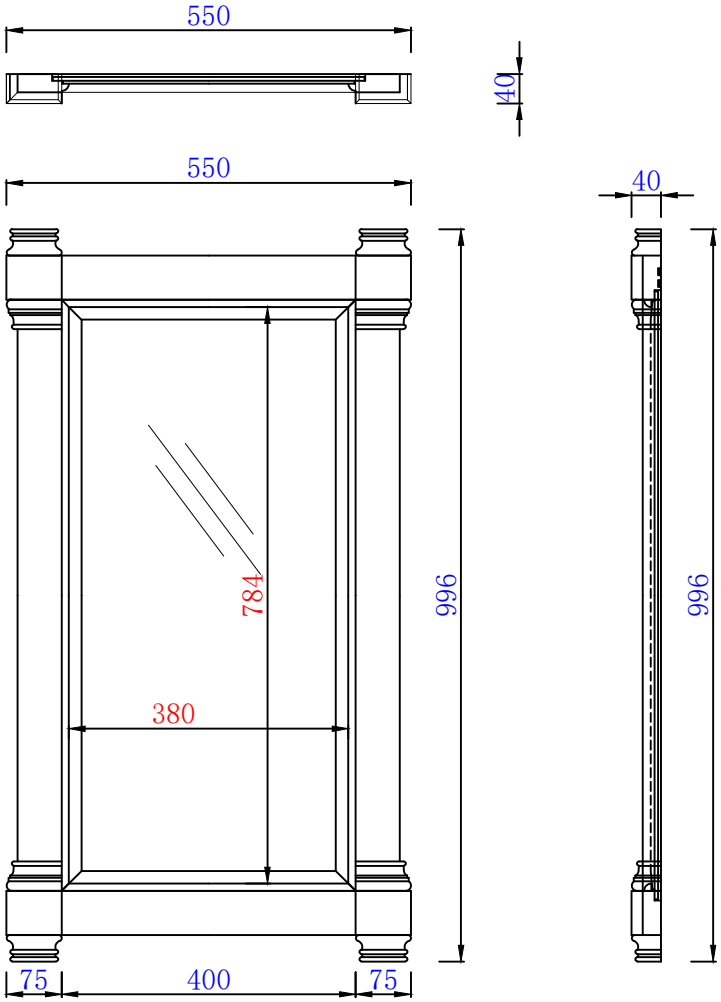
550mm