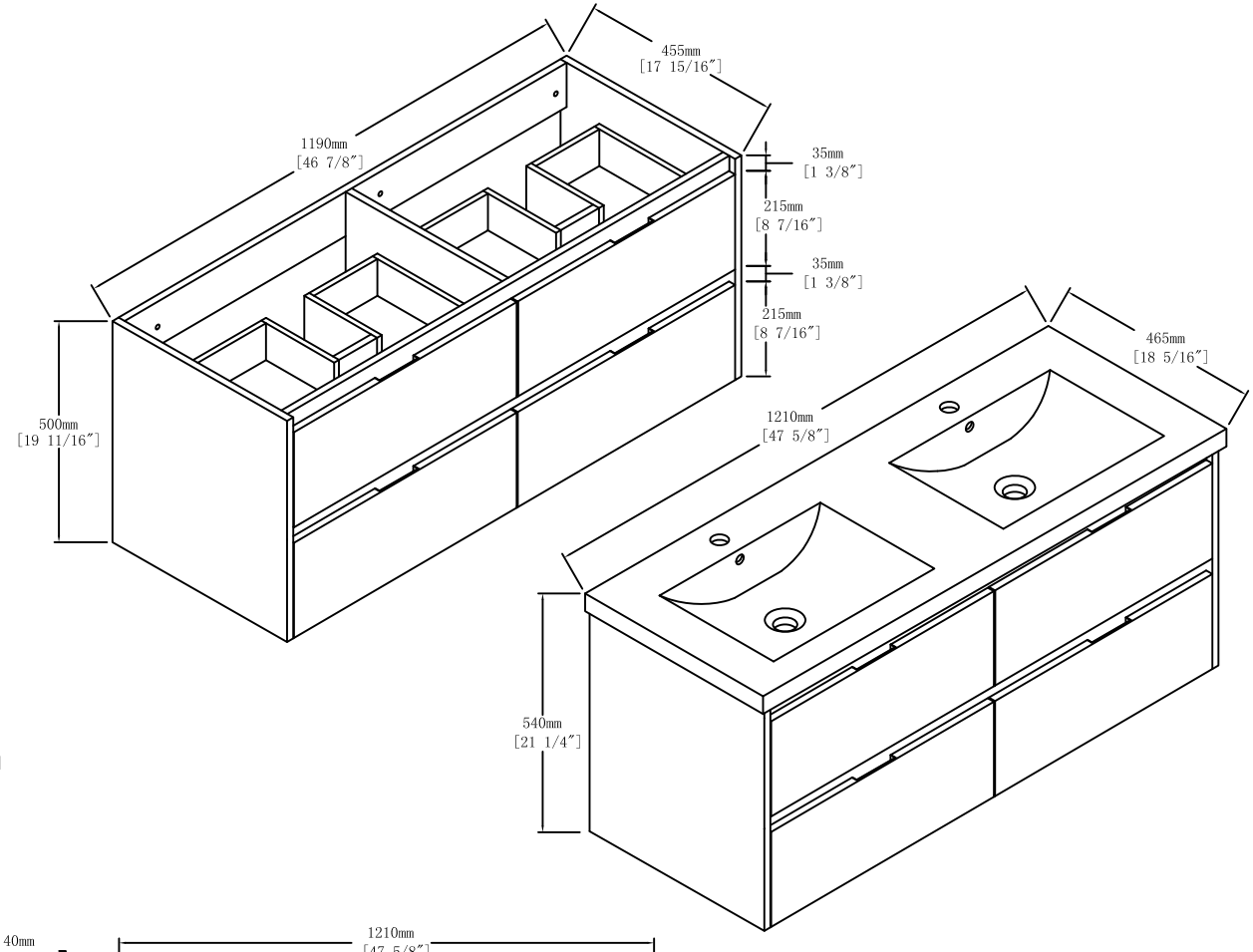

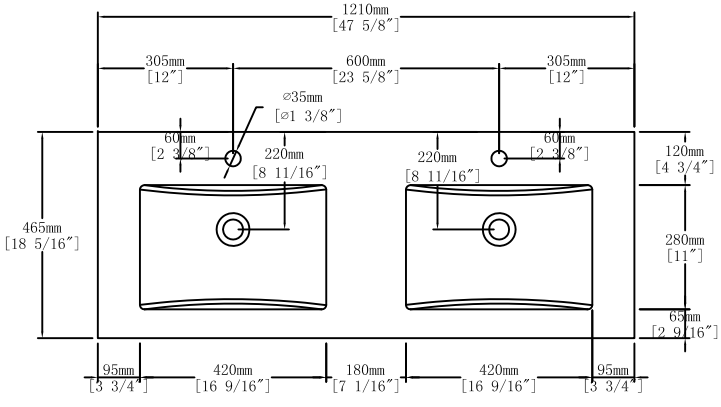

Top View

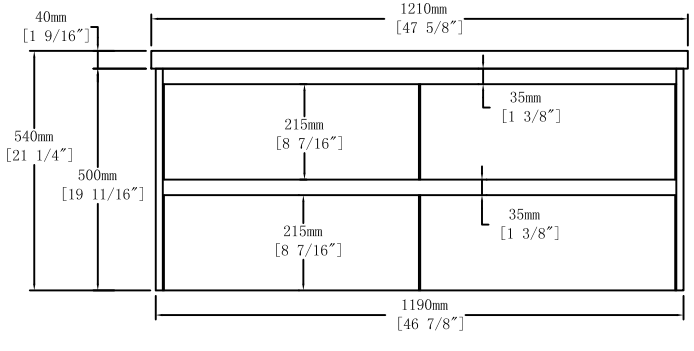

Front View

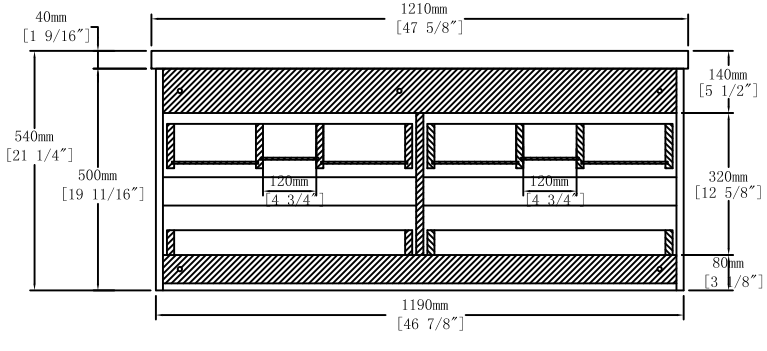

Back View