ASSEMBLY INSTRUCTION

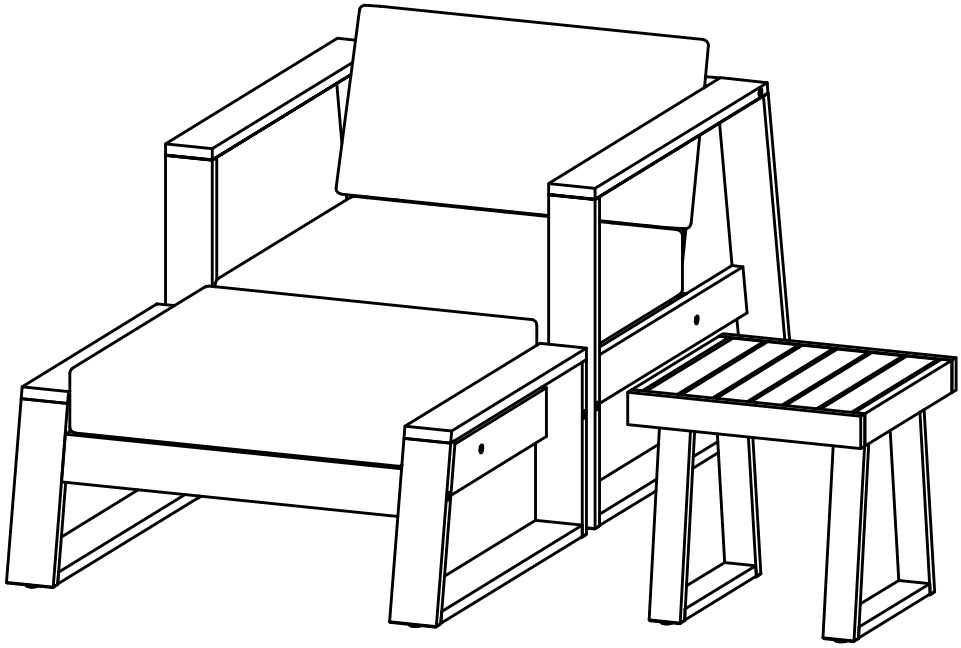

Thank you for purchasing this quality product. Be sure to check all packing material carefully for small parts which may have come loose inside the carton during shipment. Separate, identify and count all parts and hardwave.
Compare with the parts list to be sure all parts are present.
"DO NOT TIGHTEN SCREWS UNTIL COMPLETELY ASSEMBLED″

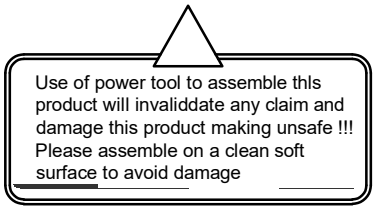

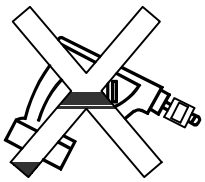

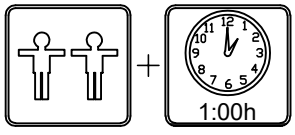

ToolsRequired

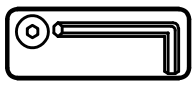

(Included)

IMPORTANT:
PLEASE READ INSTRCTION BEFORE STARTING THE ASSEMPLY

PLEASE DO NOT RETURN TO STORE



Please do not return this product to the retailer!!
We are able to assist you in ANY way

If you find that you have any trouble with assembly or missing or damaged parts please contact the seller.

Before Installation

Important – Please read these instructions fully before starting assembly

Thank you for purchasing this quality product. Be sure to check all packing materials carefully for small parts, which may have come loose inside the carton during shipment. Identify and count all items according to the PARTS LIST and/or HARDWARE LIST shown below. Check you have all the components and tools listed on the following pages.

- We recommend that you assemble this product with the assistance of another person; this will make the assembly easier, and will help eliminate damage to the product or injury to persons during assembly.
- Please do not over tighten screws or bolts until the assembly is completed.
- Keep children and animal away from the work area, small parts could choke if swallowed.
- Please put all parts on a non-abrasive floor before assembly,and follow the assembly steps to assemble your newly purchased product correctly and efficently.

DETAIL VIEW - LOUNGE CHAIR

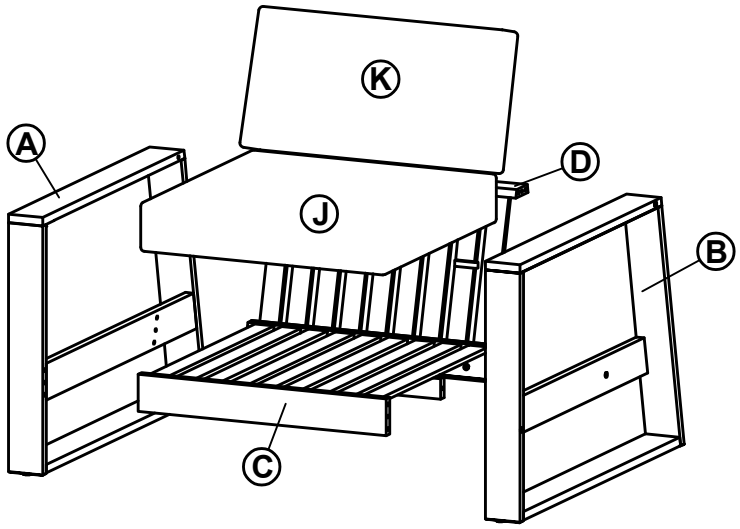

DETAIL VIEW - OTTOMAN

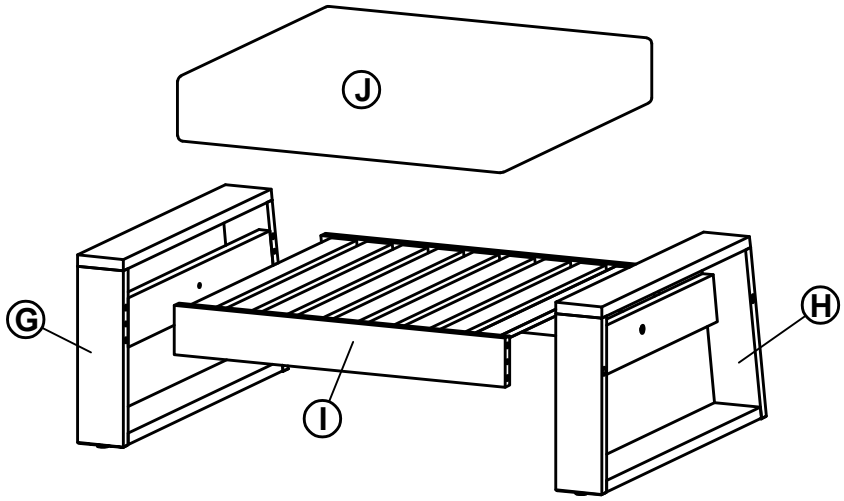

DETAIL VIEW - OUTDOOR TABLE

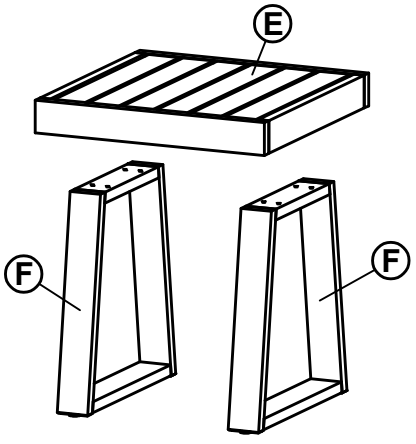

Identifying the Hardware - Indentify the hardware using the illustrations below.

PART LIST

LOUNGE CHAIR

A	B	C
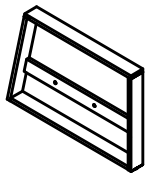	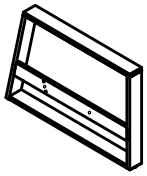	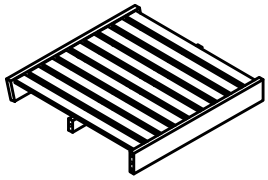
1 PC	1 PC	1 PC

D	K
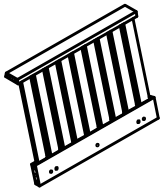	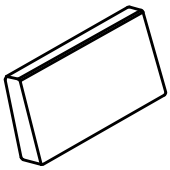
1 PC	1 PC

OUTDOOR TABLE

E	F
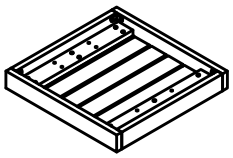	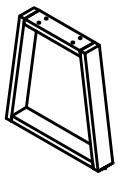
1 PC	2 PCS

PART LIST

OTTOMAN

G	H	I
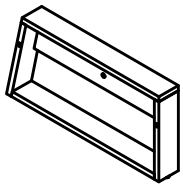	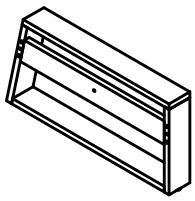	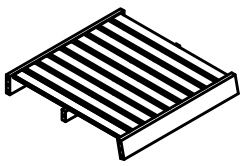
1 PC	1 PC	1 PC

J

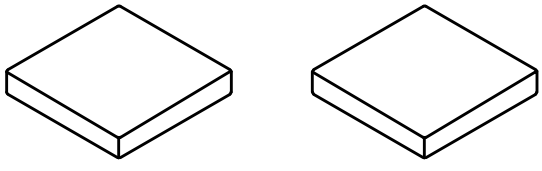

2 PCS

HARDWARE LIST

LOUNGE CHAIR

1. BOLT	2. BOLT	3. DOWEL
		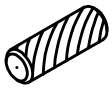
M6 x 100 mm 4 PCS	M6 x 35 mm 7 PCS	Ø10 x 30 mm 14 PCS
4. SPRING WASHER	**5. FLAT WASHER**	**6. ALLEN KEY**
		
Ø6 x 11 mm 11 PCS	Ø6 x 13 mm 11 PCS	4 x 60 mm 1 PC

OUTDOOR TABLE

7. BOLT	8. SPRING WASHER
	
M6 x 35 mm 8 PCS	Ø6 x 11 mm 8 PCS
9. FLAT WASHER	**10. ALLEN KEY**
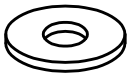	
Ø6 x 13 mm 8 PCS	4 x 60 mm 1 PC

OTTOMAN

11. BOLT	12. BOLT	13. DOWEL
		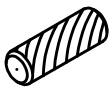
M6 x 100 mm 4 PCS	M6 x 35 mm 2 PCS	Ø10 x 30 mm 8 PCS
14. SPRING WASHER	**15. FLAT WASHER**	**16. ALLEN KEY**
	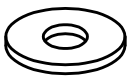	
Ø6 x 11 mm 6 PCS	Ø6 x 13 mm 6 PCS	4 x 60 mm 1 PC

STEP 1

2	3	4	5	6
3PCS	8PCS	3PCS	3PCS	1PC

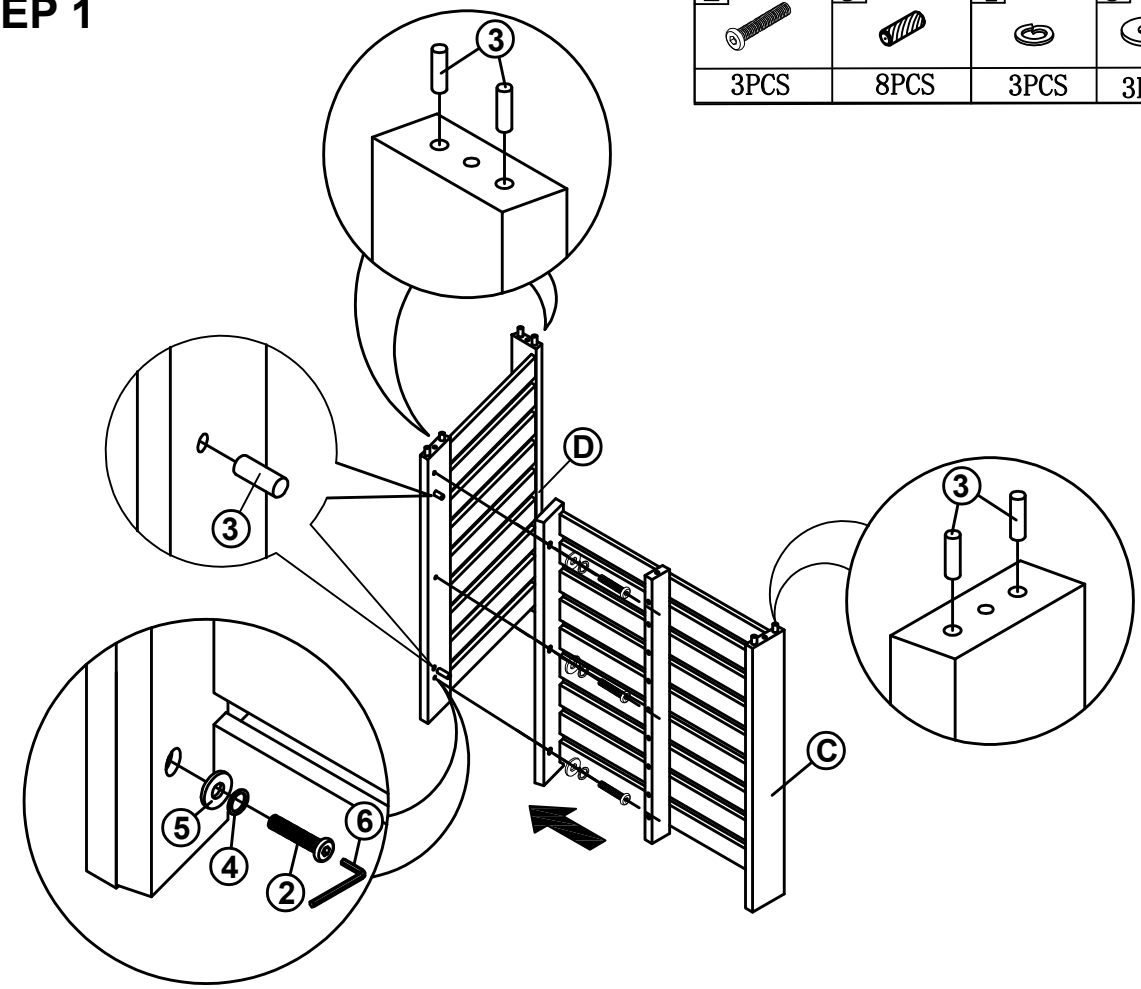

STEP 2

1	2	4	5	6
2PCS	2PCS	4PCS	4PCS	1PC

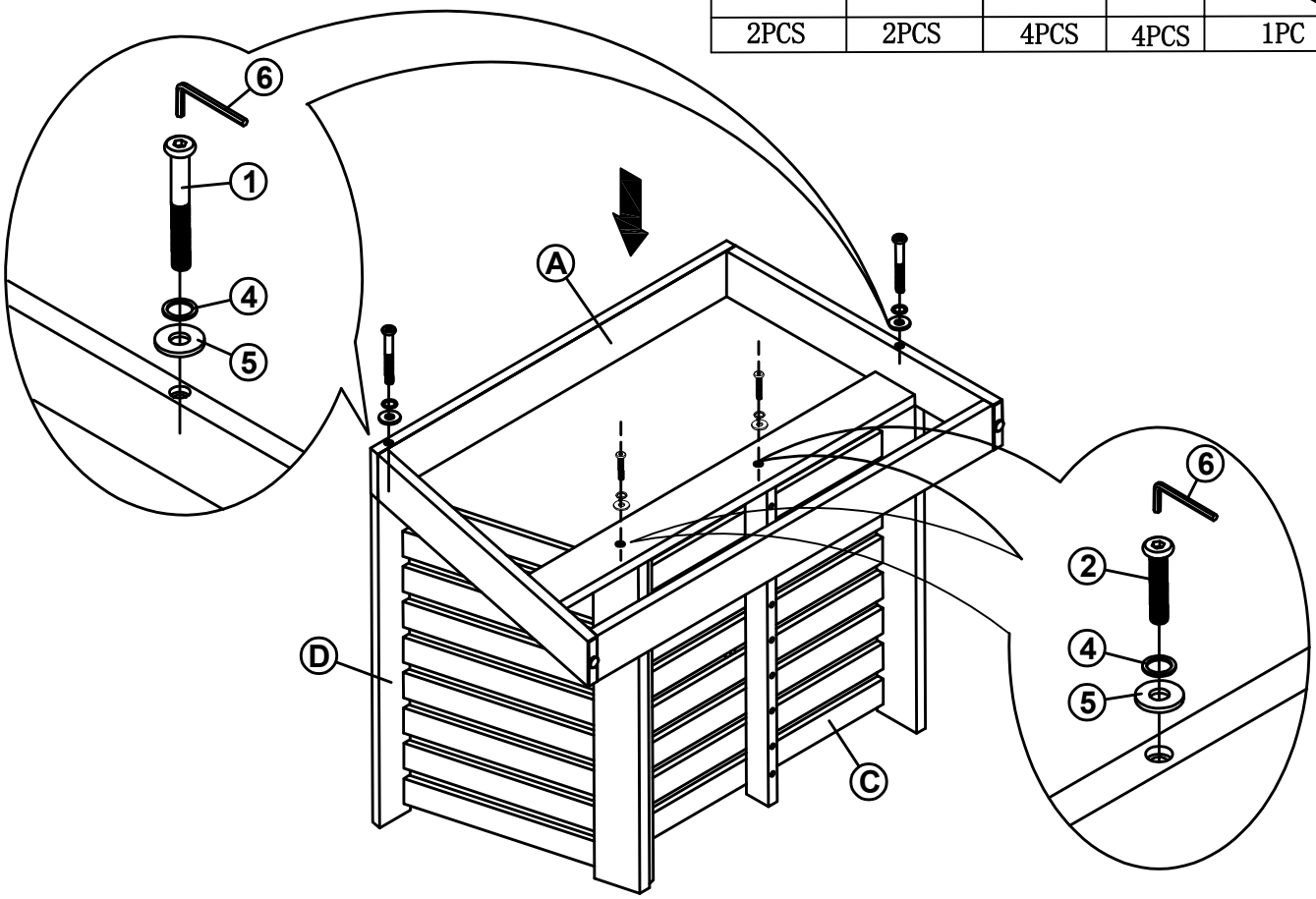

STEP 3

1	2	3	4	5	6
2PCS	2PCS	6PCS	4PCS	4PCS	1PC

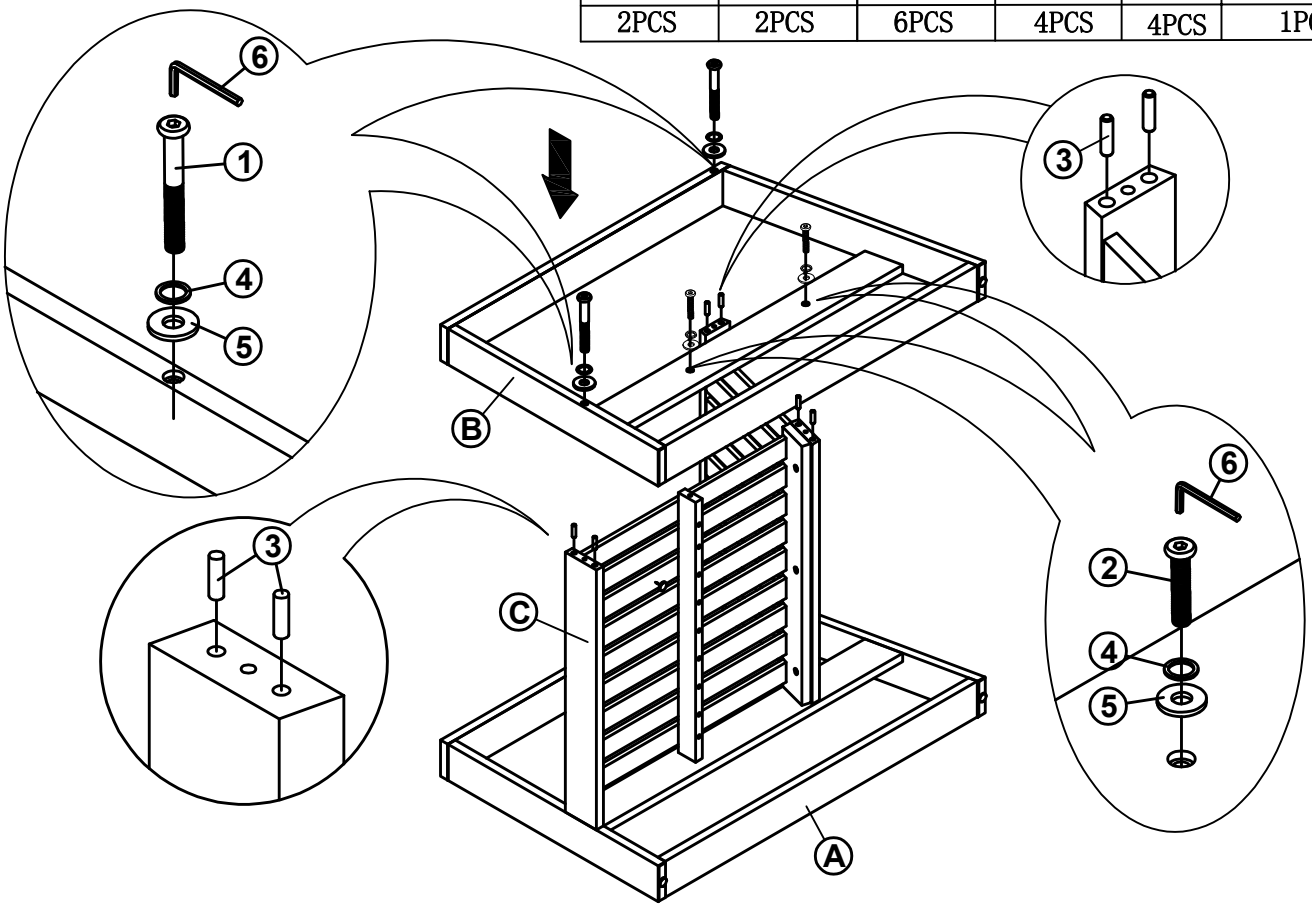

STEP 4

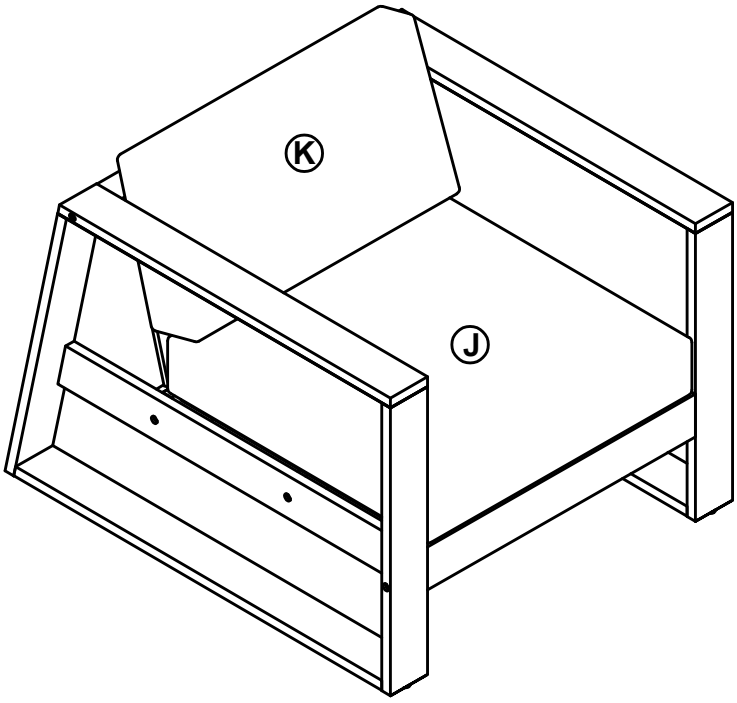

STEP 5

7	8	9	10
8PCS	8PCS	8PCS	1PC

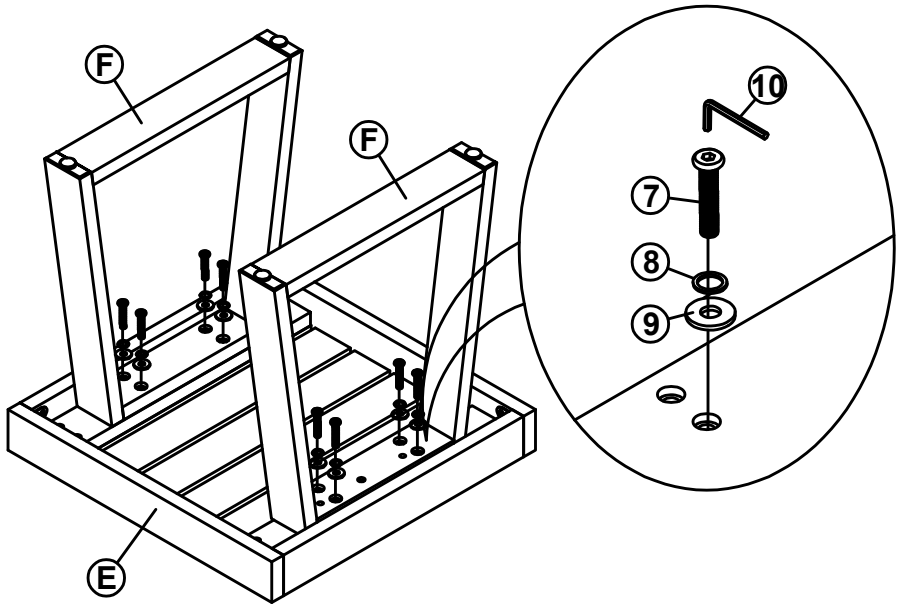

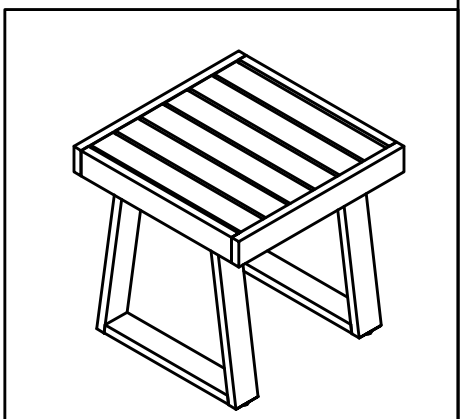

STEP 6

11	12	13	14	15	16
2PCS	1PC	4PCS	3PCS	3PCS	1PC

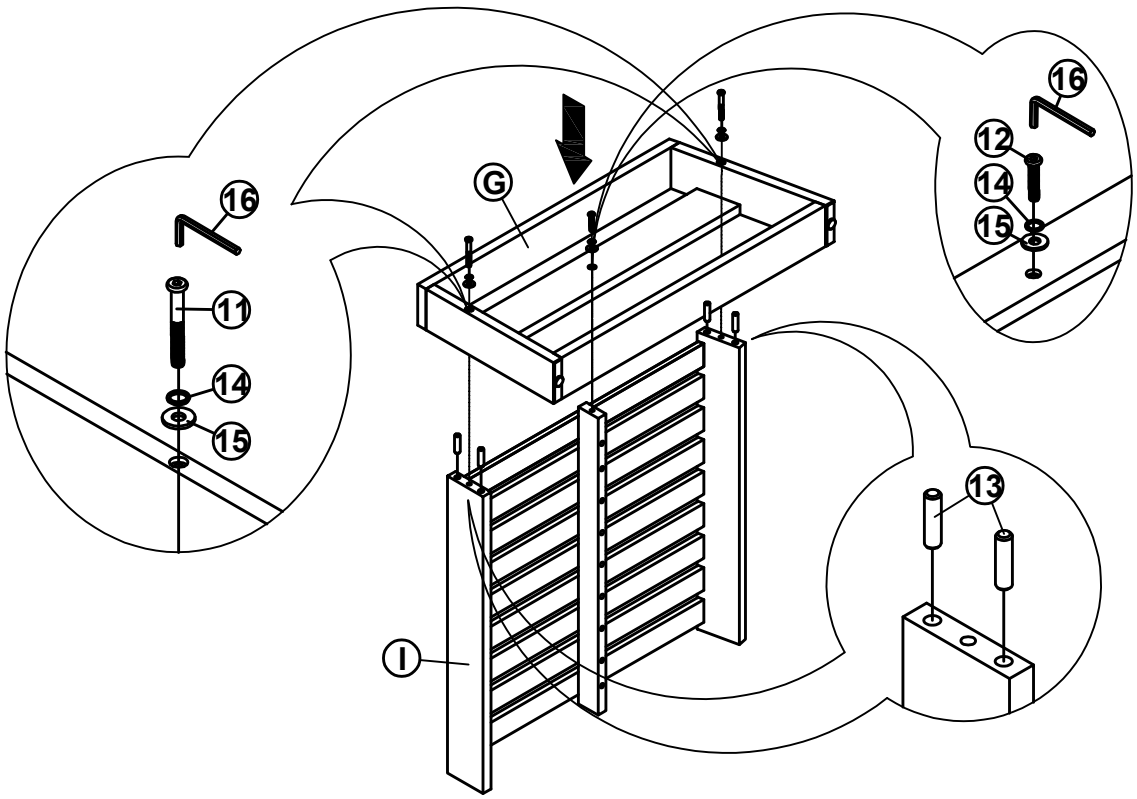

STEP 7

11	12	13	14	15	16
2PCS	1PC	4PCS	3PCS	3PCS	1PC

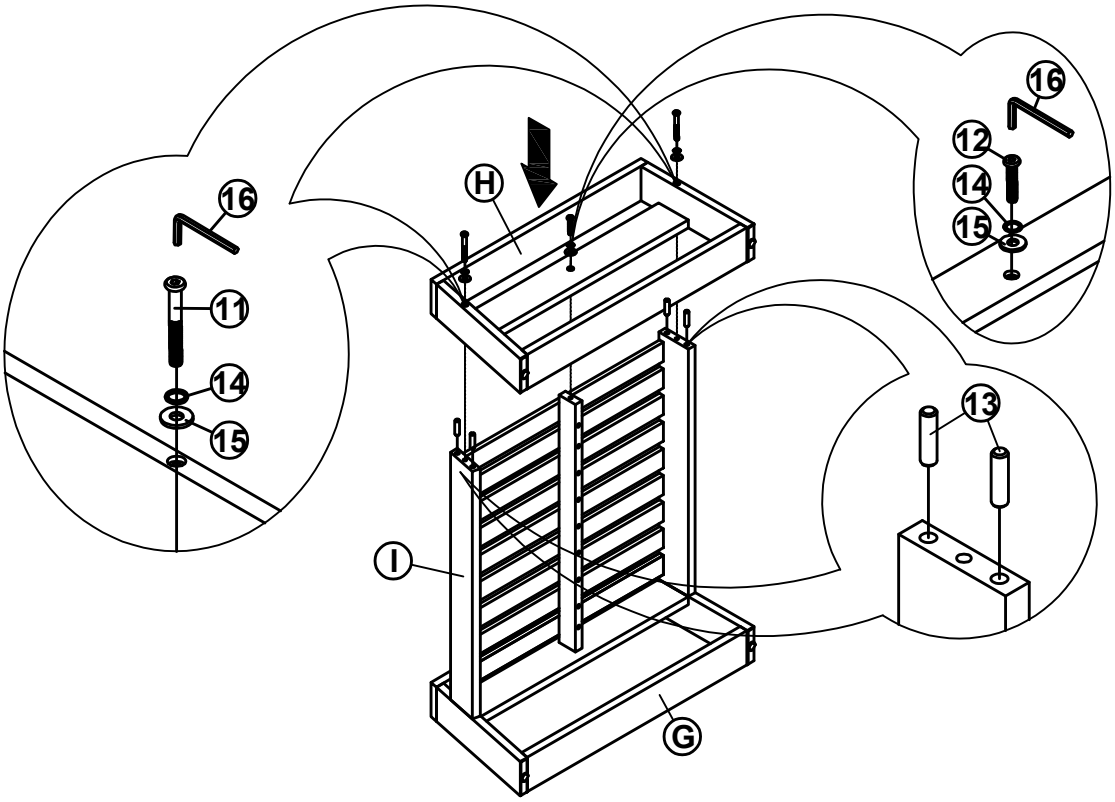

STEP 8

