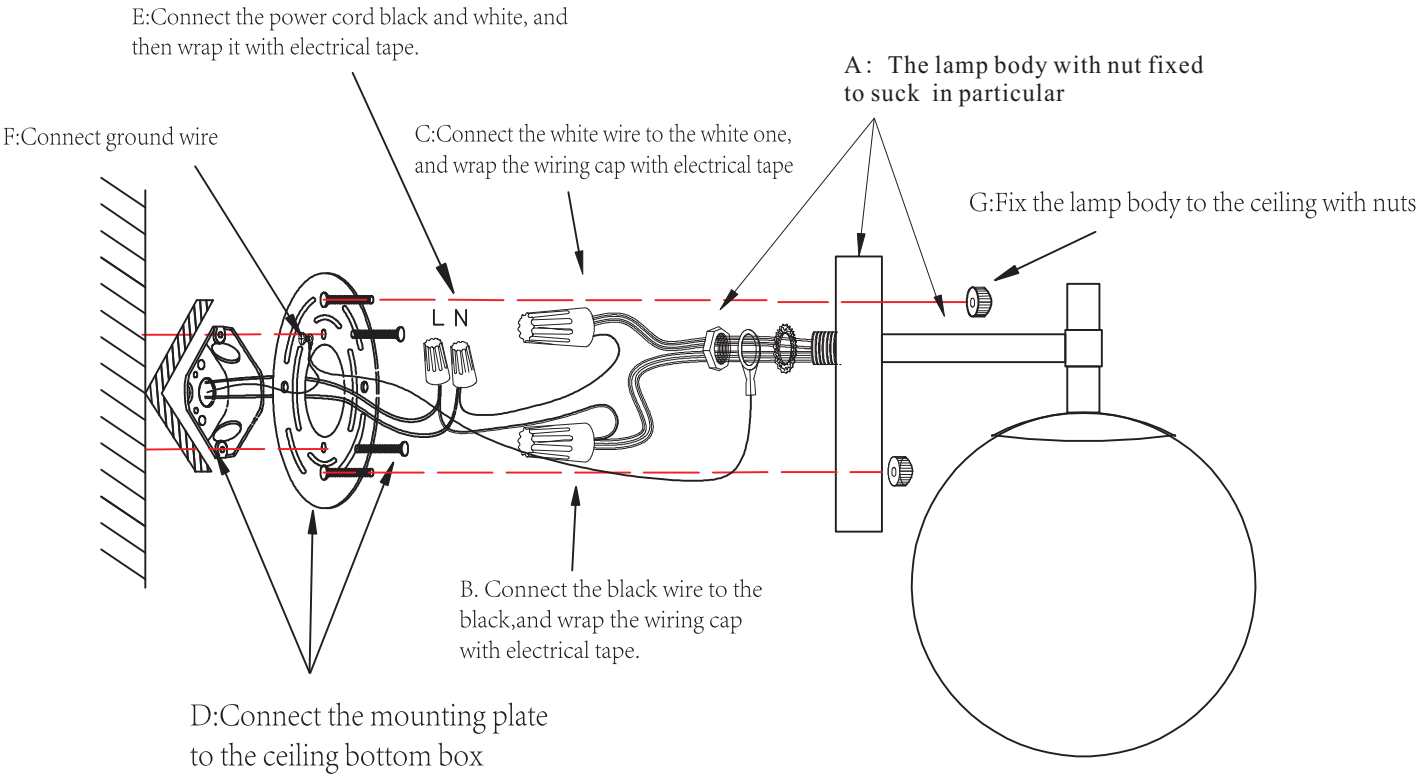
E:Connect the power cord black and white, and then wrap it with electrical tape.
A: The lamp body with nut fixed to suck in particular
F:Connect ground wire
C:Connect the white wire to the white one, and wrap the wiring cap with electrical tape
G:Fix the lamp body to the ceiling with nuts
L N
B. Connect the black wire to the black,and wrap the wiring cap with electrical tape.
D:Connect the mounting plate to the ceiling bottom box

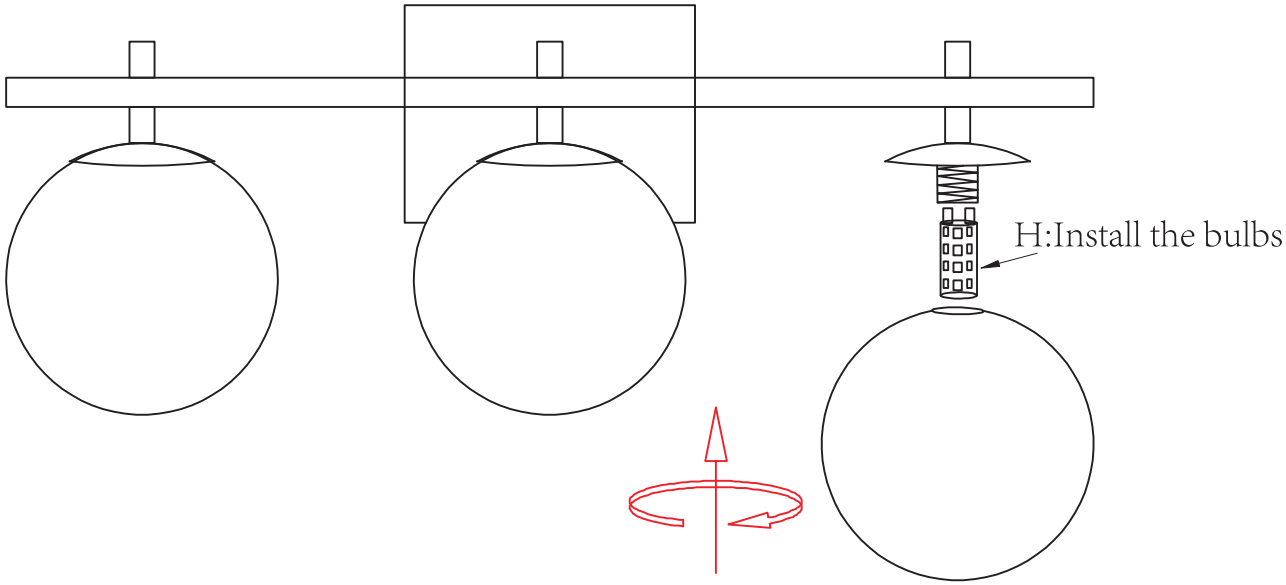
H:Install the bulbs