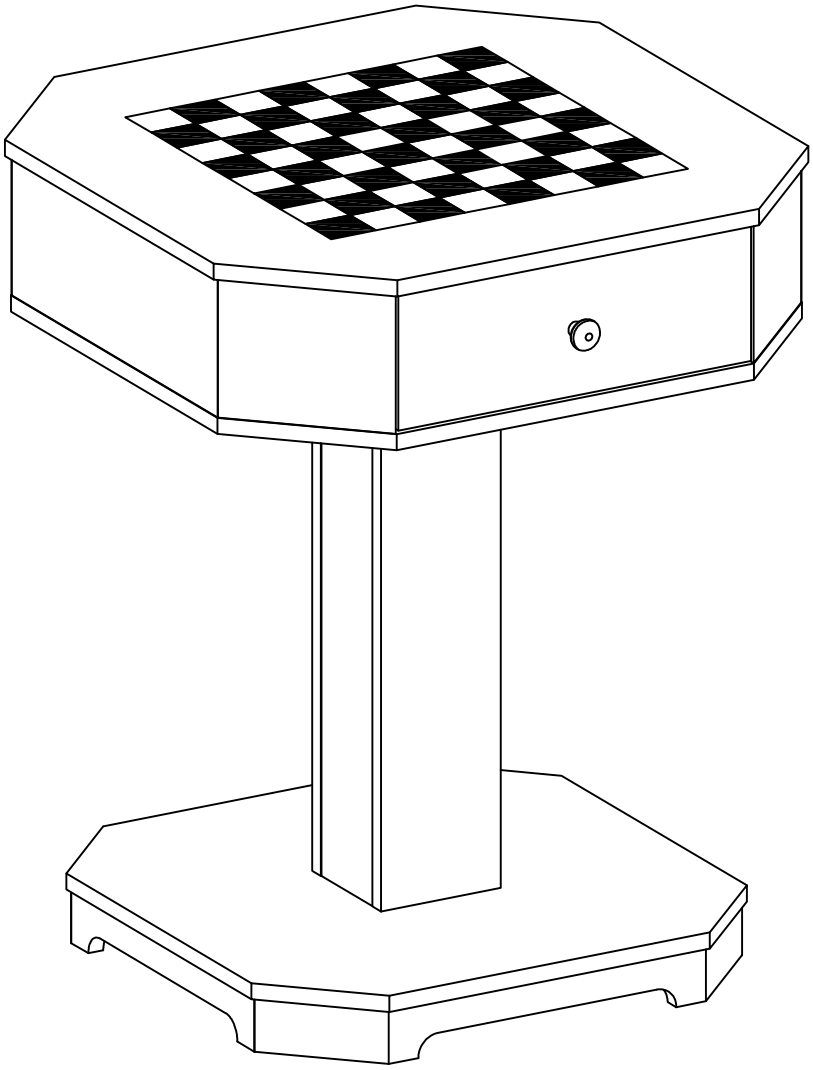

Attention：Don't tighten the screw before all screws are in place

USER'S MANUAL

10FJGCZJH047

Hardware List

Ⓐ	Ⓑ	Ⓒ	Ⓓ	Ⓔ	Ⓕ
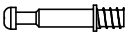					
6x35 (32pcs)	Ø15x12 (24pcs)	Ø15x10 (8pcs)	Ø8x30 (24pcs)	Ø7x47 (24pcs)	M4x64 (24pcs)

Ⓖ	Ⓗ	Ⓘ	Ⓙ	Ⓚ	Ⓛ	Ⓜ
	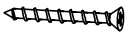	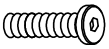				
Ø3.5x14 (2pcs)	Ø4x35 (24pcs)	M6x25 (4pcs)	60x16 (2pcs)	M4x18 (2pcs)	Ø29x25 (2pcs)	

Panel List

①	②	③	④
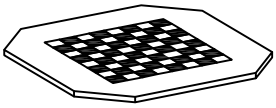	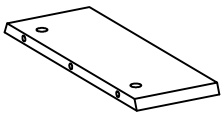	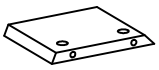	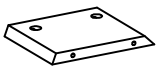
x1	x2	x2	x2

⑤	⑥	⑦	⑧
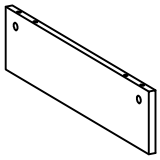	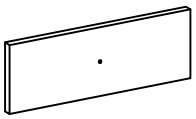	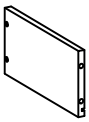	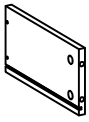
x2	x2	x2	x2

⑨	⑩	⑪	⑫
		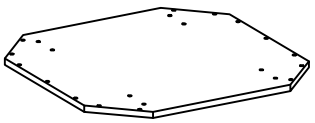	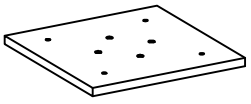
x2	x2	x1	x1

⑬	⑭	⑮	⑯	⑰
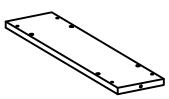				
x2	x2	x1	x4	x4

Assembling the unit with camlocks and wood dowels.

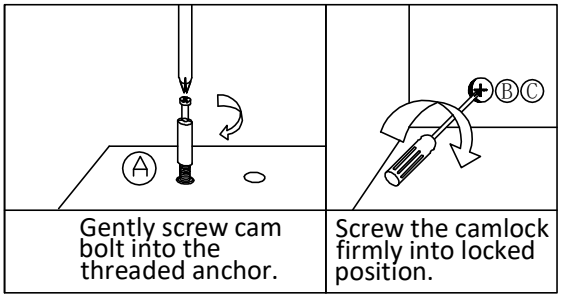

Assembly instructions

Step 1



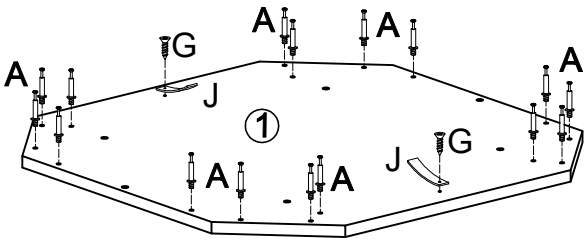

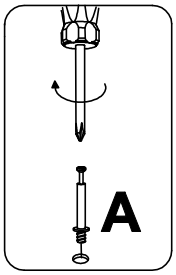

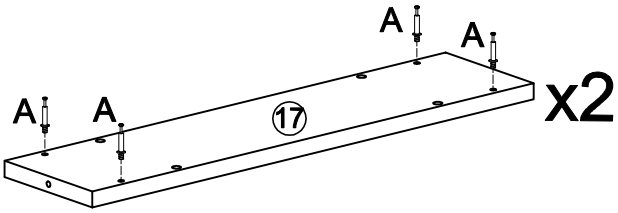

Step 2



Step 3

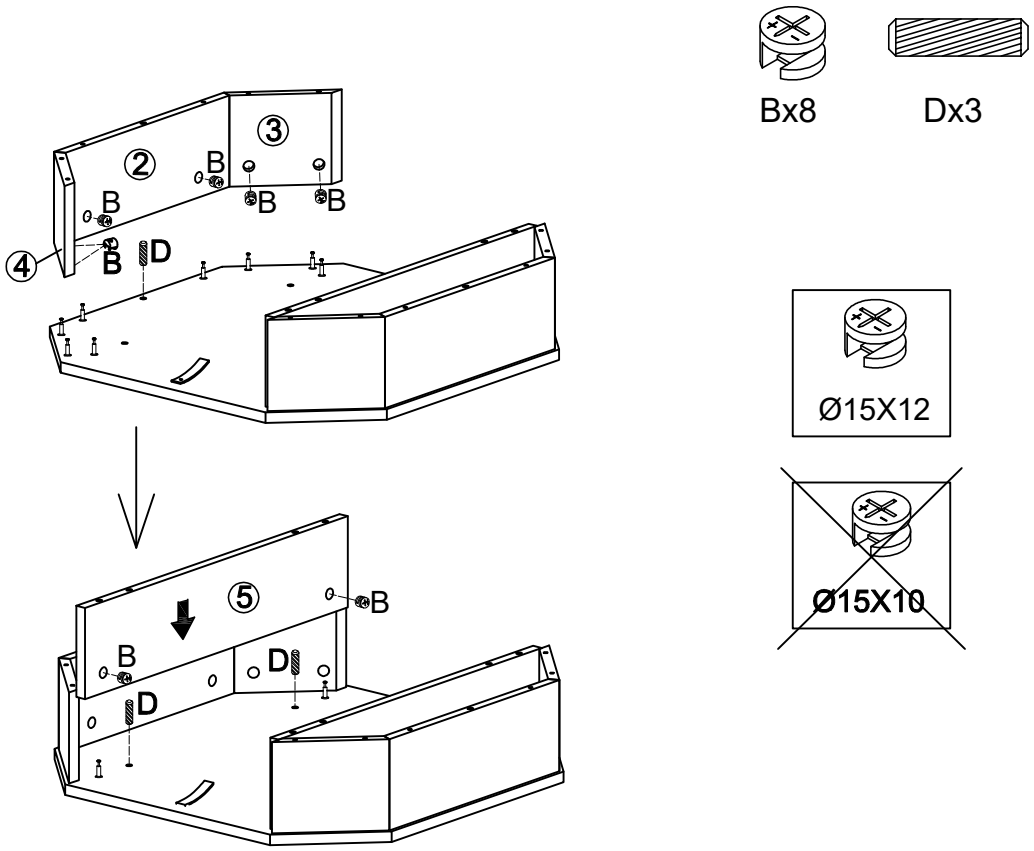
Bx8
Dx3
③
②
B
B
B
B
B
④
B
D
⑤
B
B
D
D
Ø15X12
Ø15X10

Step 4

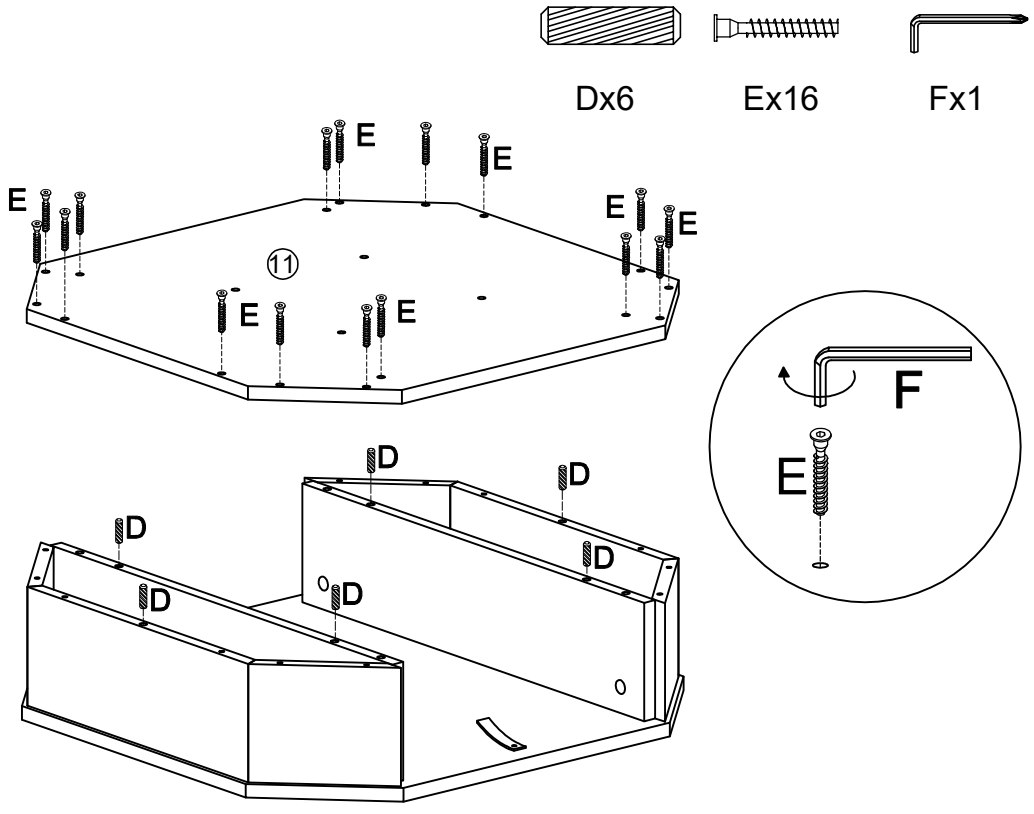
Dx6
Ex16
Fx1
E
E
E
E
E
E
E
⑪
E
E
D
D
D
D
D
D
F
E

Step 5



Bx8



Dx8

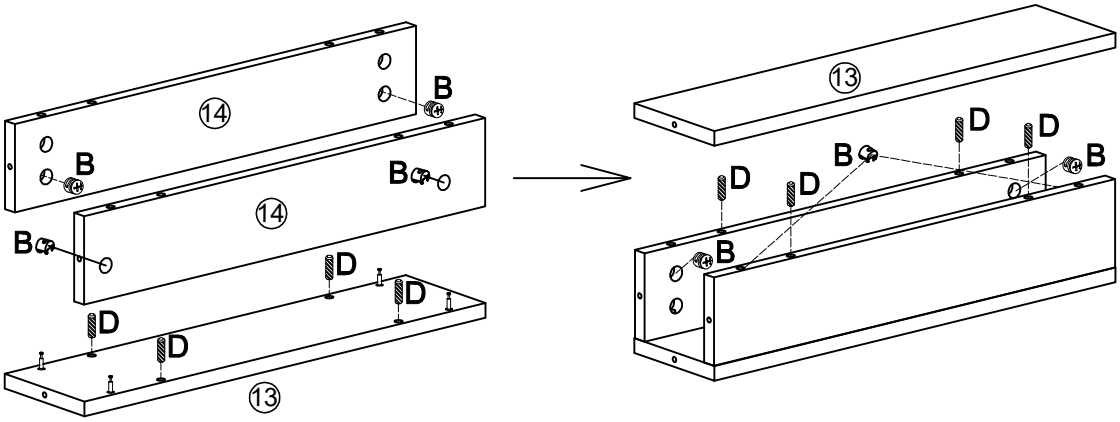

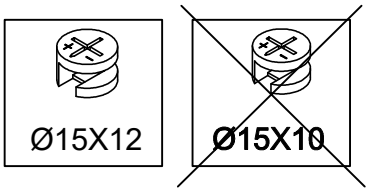

Step 6

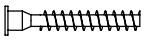

Ex4

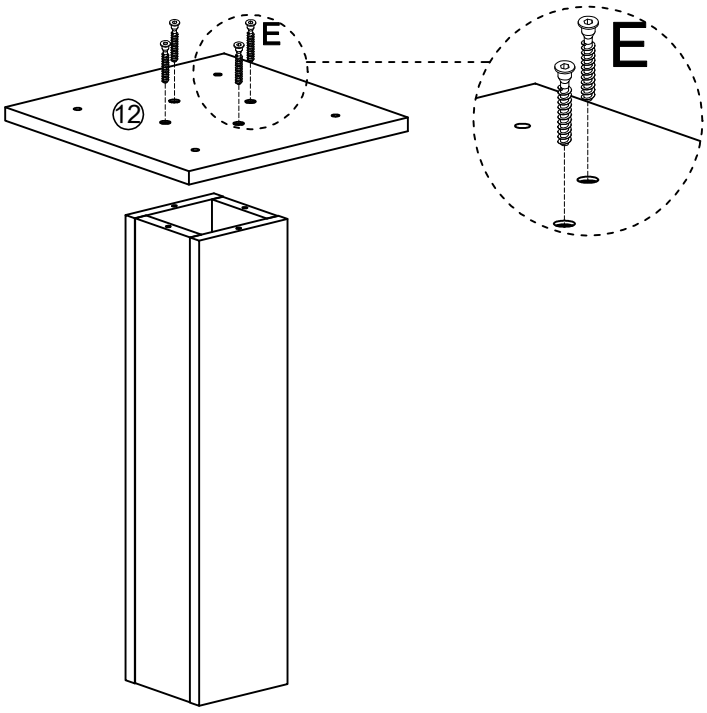

Step 7

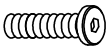

Ix4

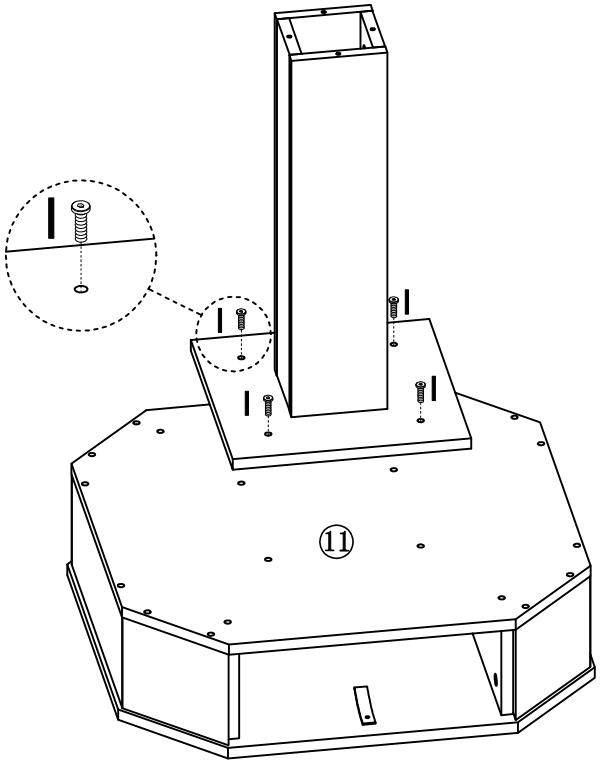

Step 8



Dx4



Hx16

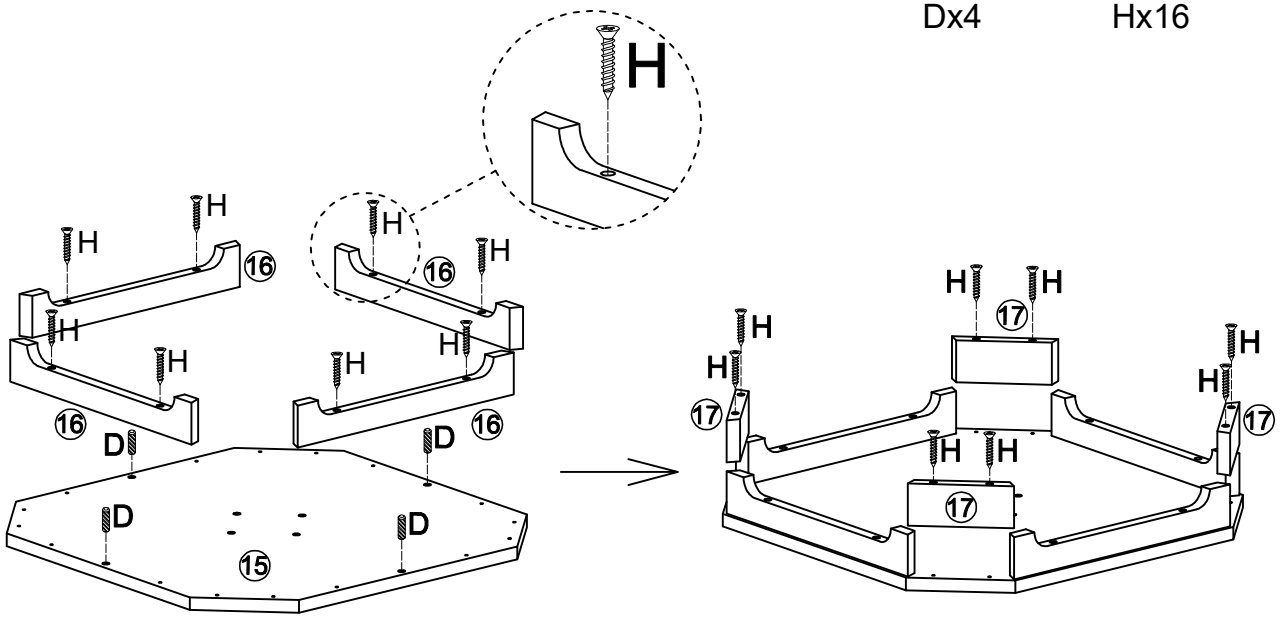

Step 9

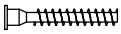

Ex4

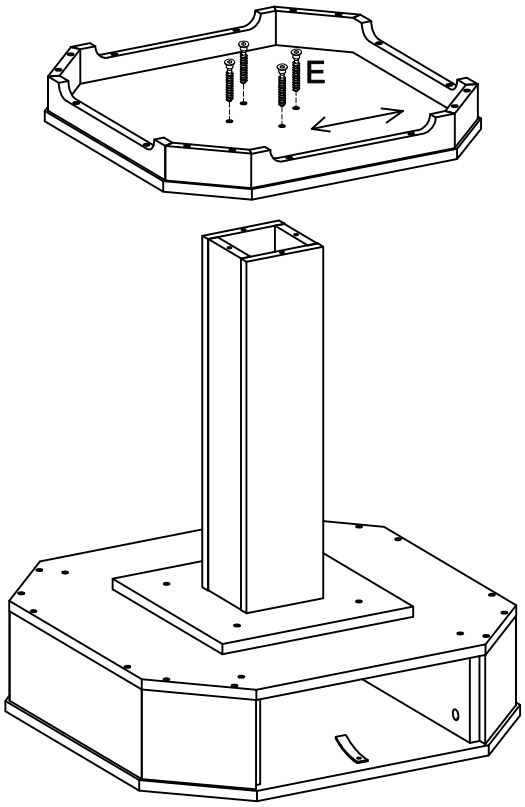

Step 10

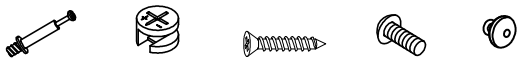

Ax8 Cx8 Hx8 Kx2 Lx2

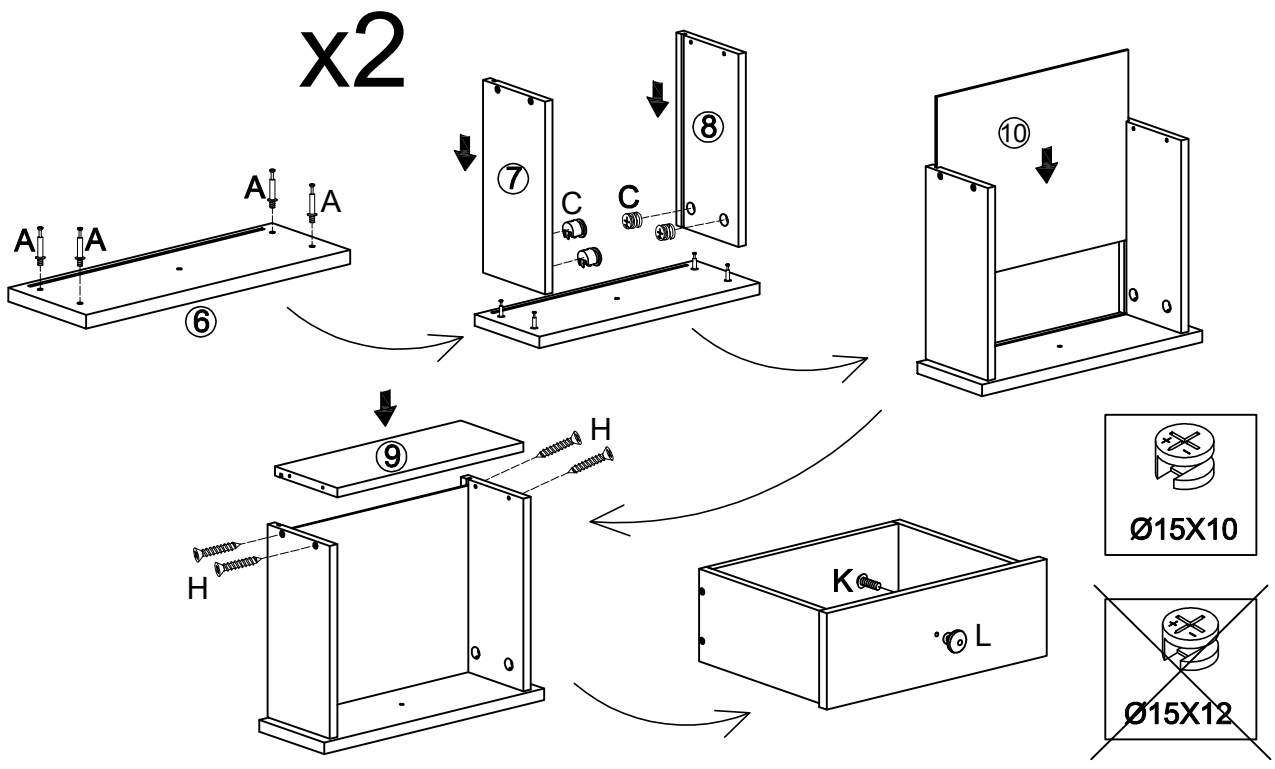

Step 11

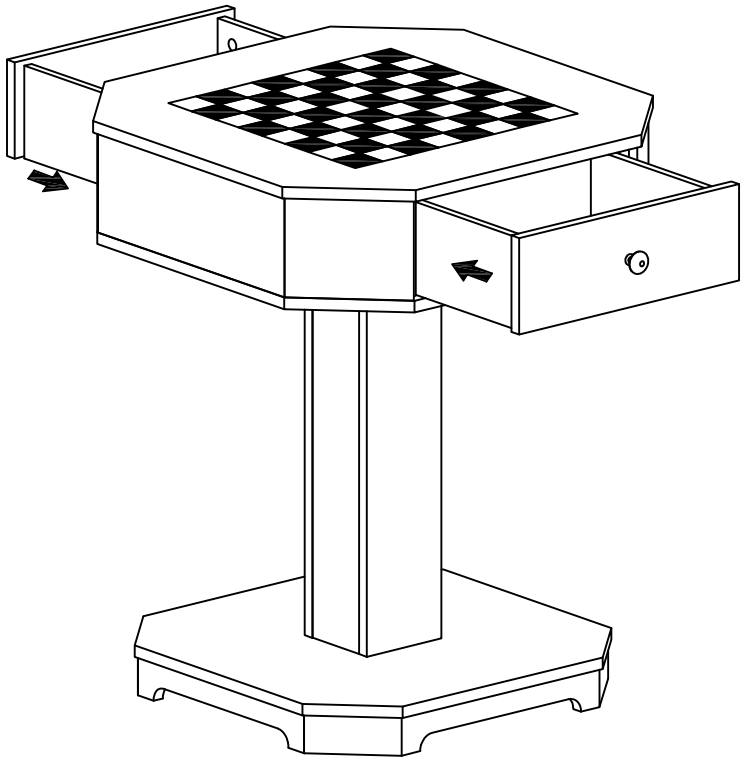

Step 12

