ASSEMBLY INSTRUCTION

Caution : You must read this before you proceed

Care & Maintenance

- ⊘  • Not for commercial use. For residential use only.
- ✓  • Furniture may scratch foors. We recommennd using furniture pads to protect your floors.
- ⊘  • Do not put hot items directly on furniture surface.
- ⊘  • Do not clean furniture with harsh creansers or polish.
- ⊘  • Do not plase furnimture under direct sunlight.
- ⊘  • Do not plase furniture near heating or cooling vents.
- ⊘  • Do not write on furniture without a padded barrier to protect the surface.
- ⊘  • Do not place furniture outside. For indoor use only.
- ⊘  • Stains may be removed with mild soap solution and damp cloth.
- ⊘  • Children should not climb or jump on the furniture.

- ✓  • Dust and pick-up spills using a clean, non-colored, lint-free cloth.

Please look in carton for hardware packs and legs.
Sets often ship in multiple boxes and may arrive a day or two apart.

DINING CHAIR
N768P446218

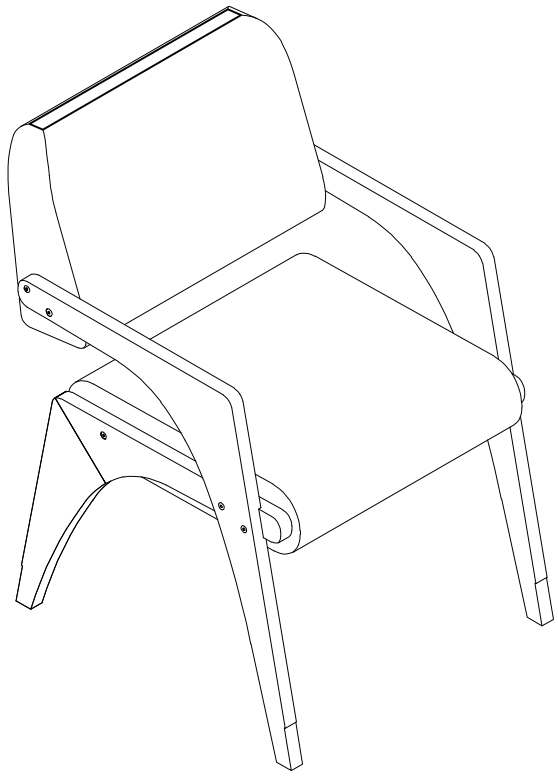

Parts List

Label	Picture	Description	QTY
A	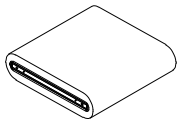	Seat cushion frame	1
B	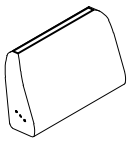	Backrest	1
C	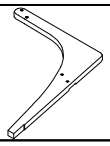	Right front leg	1
D	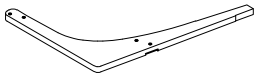	Left front leg	1
E	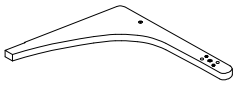	Left back leg	1
F		Right back leg	1

HARDWARE LIST

Label	Picture	Description	QTY
①		Bolt (5/16" x35mm)	12+1
②		Spring washer (12mm)	12+1
③		Flat washer (19 mm)	12+1
④		Allen wrench (M4)	1+1
⑤	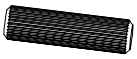	Dowel (Ø12x30mm)	10+1
⑥	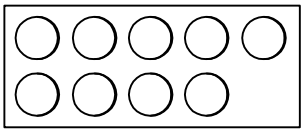	Cover sticker (Ø21mm)	10+1
⑦	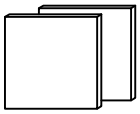	Felt pad	2

Assembly preparation

Before begining assembly:

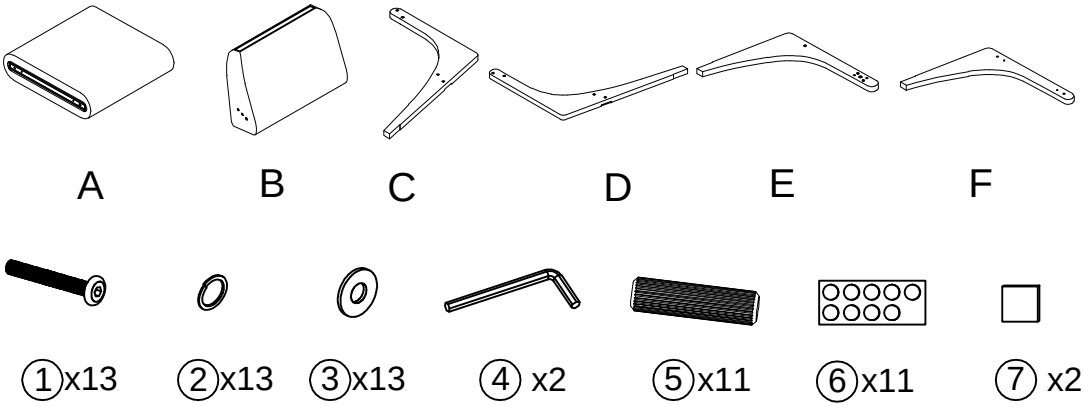

- Read instructions, cover to cover-
- Have 2 adults on hand fo assembly-
- Do not assemble on flooring of carpet-
- Assemble on a clean non-marring suface (packing foam)-
- Save all packaging until finshed-

Assembly steps

Overview

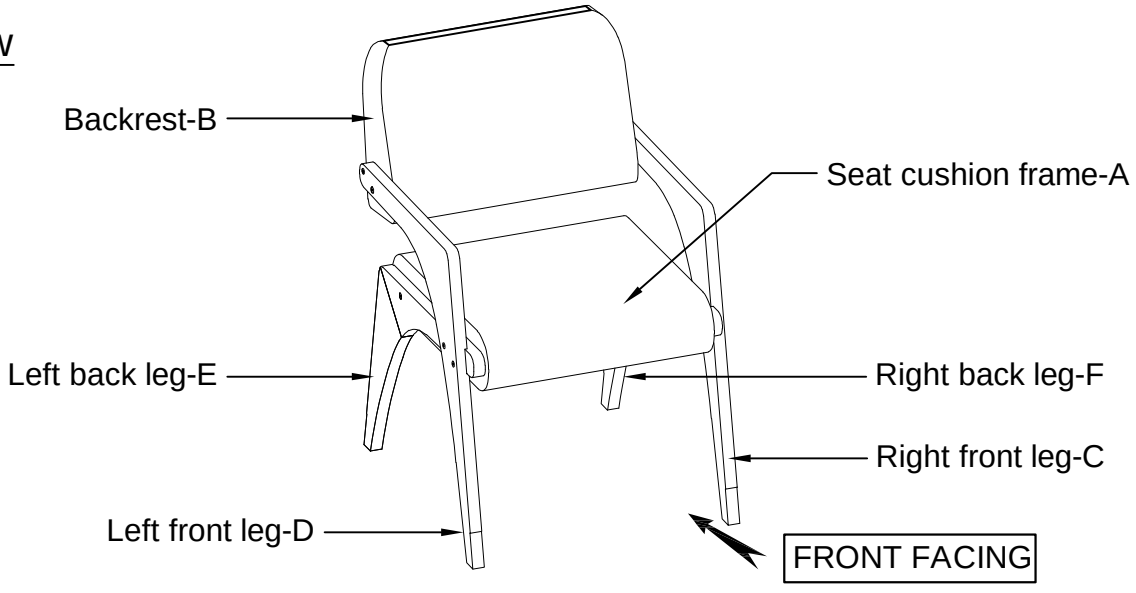

This chair has multiple parts and may require up to 30 minutes to assemble. To give you an overview of the chair parts, the above picture is provided to help you put the various parts into perspective. Please read through the instructions below to familiarize yourself with the parts and steps before assembly.

Step 1

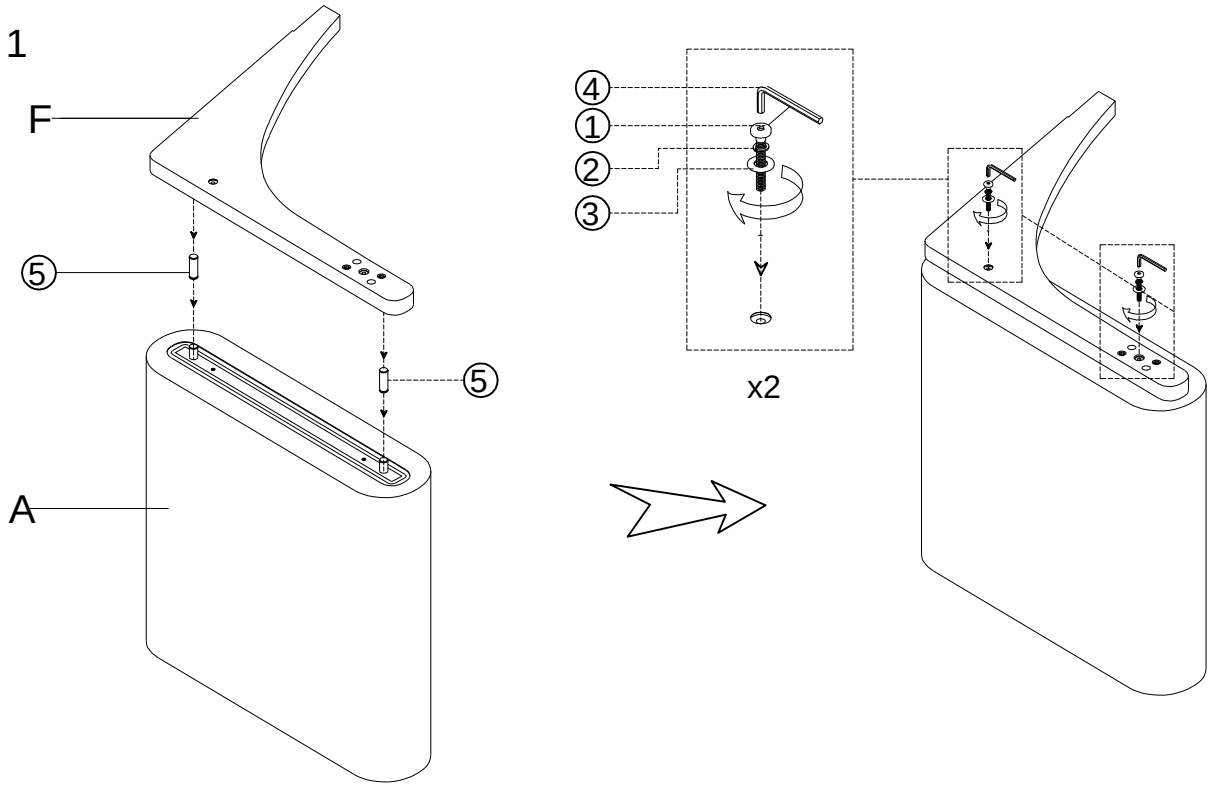

Insert dowel⑤into the seat frame A, attach the right leg F to the seat frame using bolt ①, spring washer ②, and flat washer ③, tightening with allen wrench ④.

Step 2

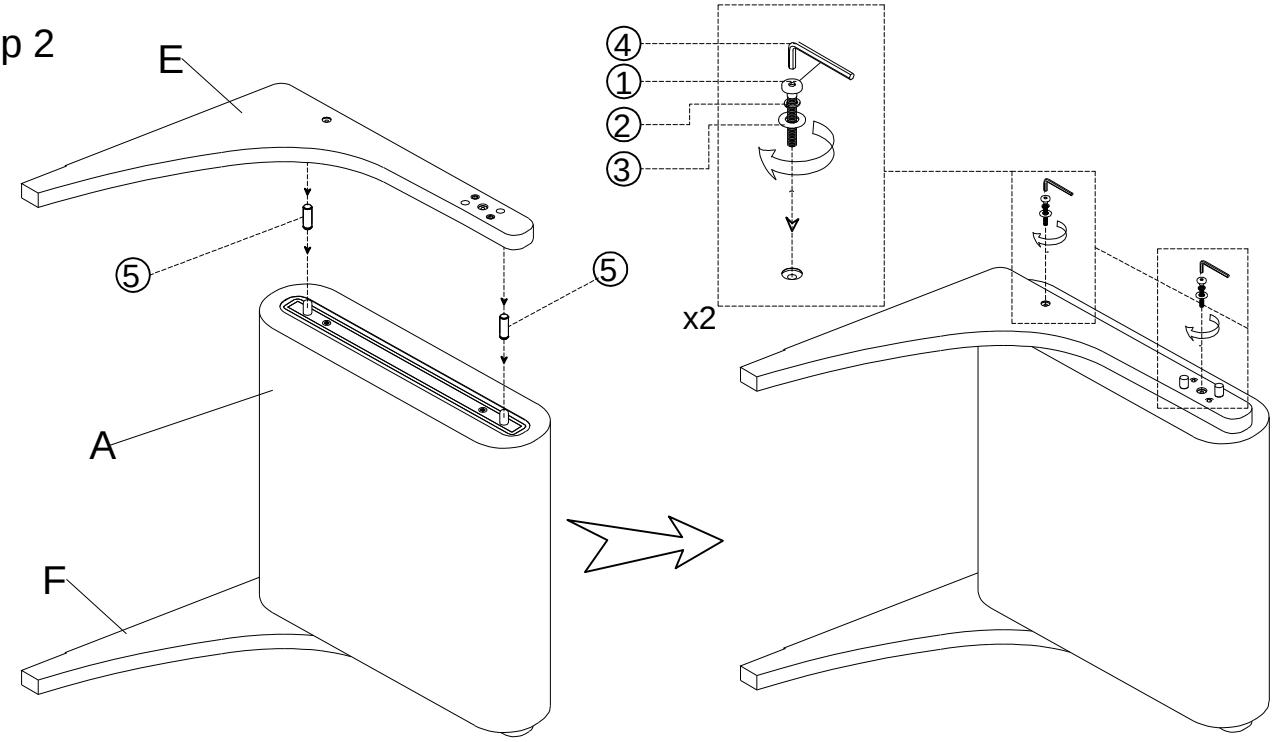

Insert dowel⑤into the seat frame A, attach the left back leg E to the seat frame using bolt ①, spring washer ②, and flat washer ③, tightening with allen wrench ④.

Step 3

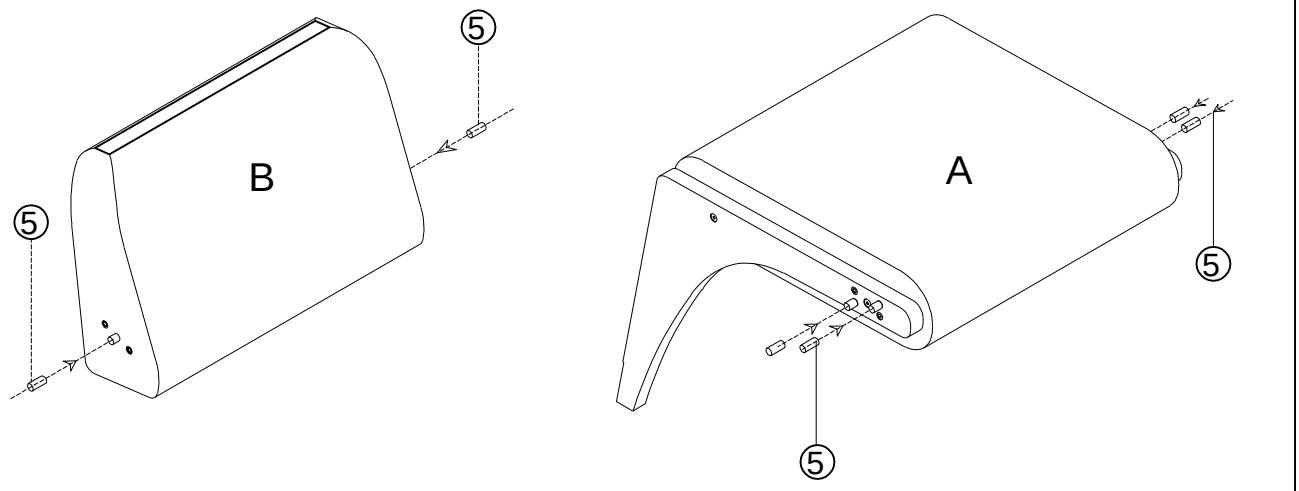

Insert the dowel ⑤ to backrest B. Insert the dowel ⑤ to back leg.

Step 4

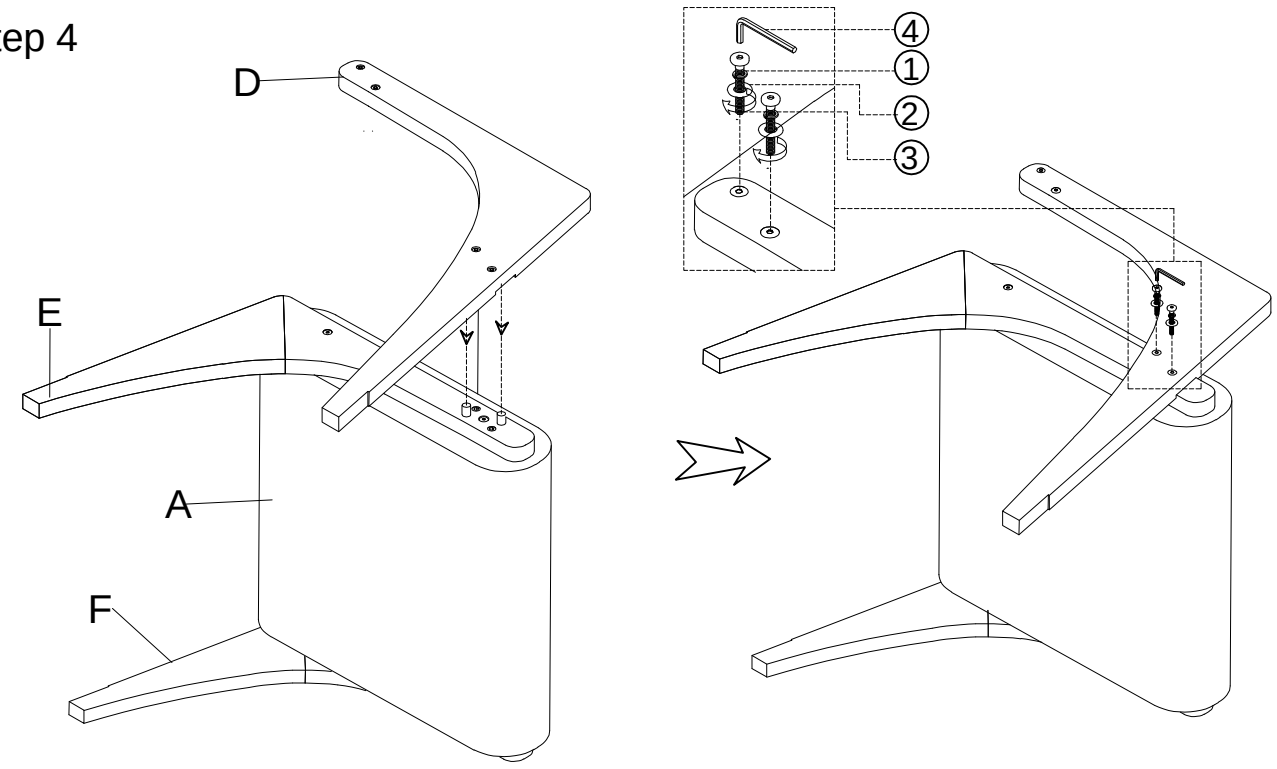

Attach the left front leg D to the back leg E, using bolt ①, spring washer ②, and flat washer ③, tightening them with allen wrench ④.

Step 5

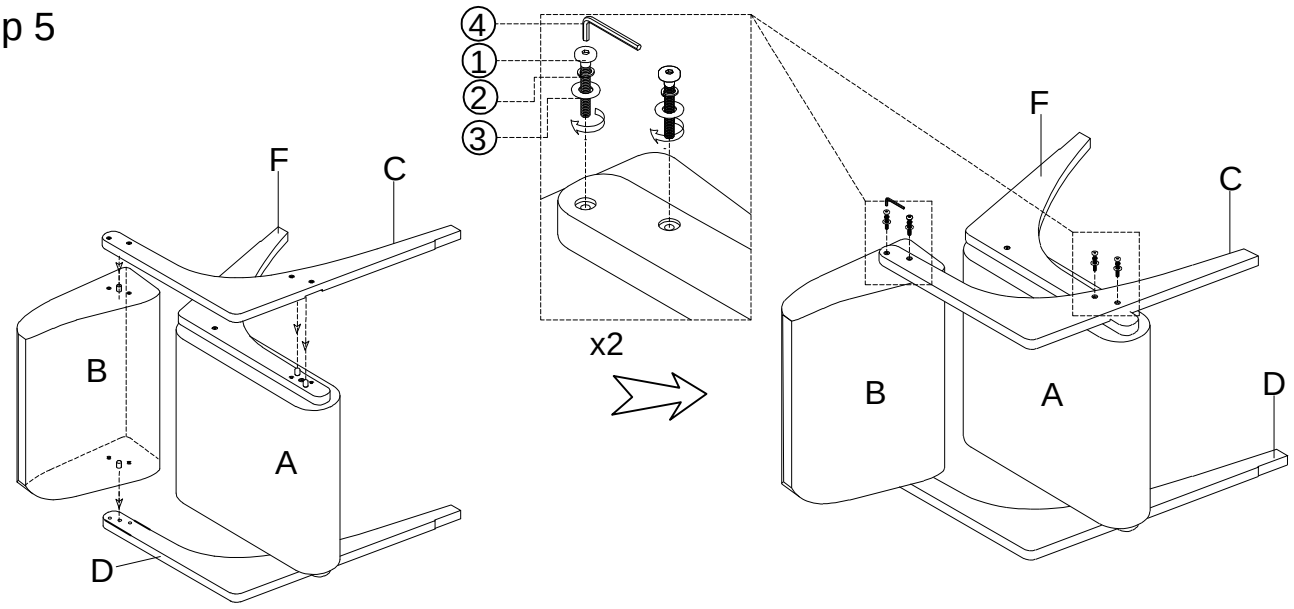

Attach the backrest-B to the front leg D then attach the right front leg C to the back leg F and the backrest B. Using bolt ①, spring washer ②, and flat washer ③, tightening with allen wrench ④.

Step 6

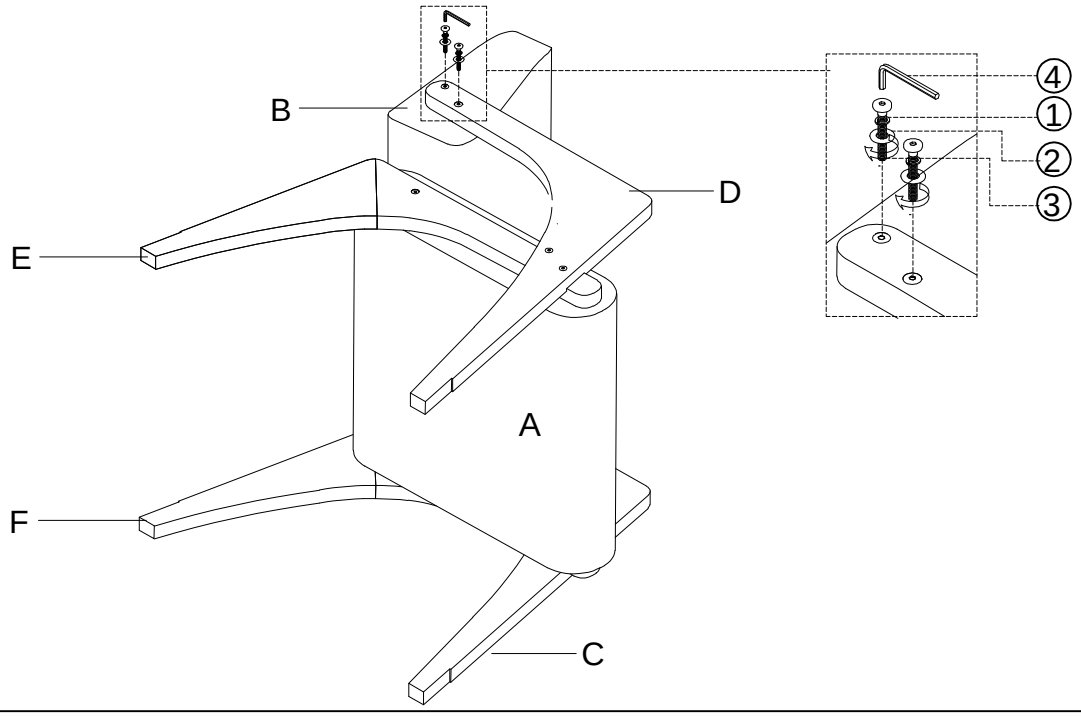

Using bolt ①, spring washer ②, and flat washer ③, tightening with allen wrench ④.

AUTION : When tightening these screws, tighten sequentially.
DO NOT tighten any screw fully and then towards the next one.
This would cause the frame to warp.
If there is still wobbles, loosen the screws and execute this same process.
WARNING!! IF IT IS NOT STABLE , IT COULD LEAD TO DAMAGING THE PRODUCT

Step 7

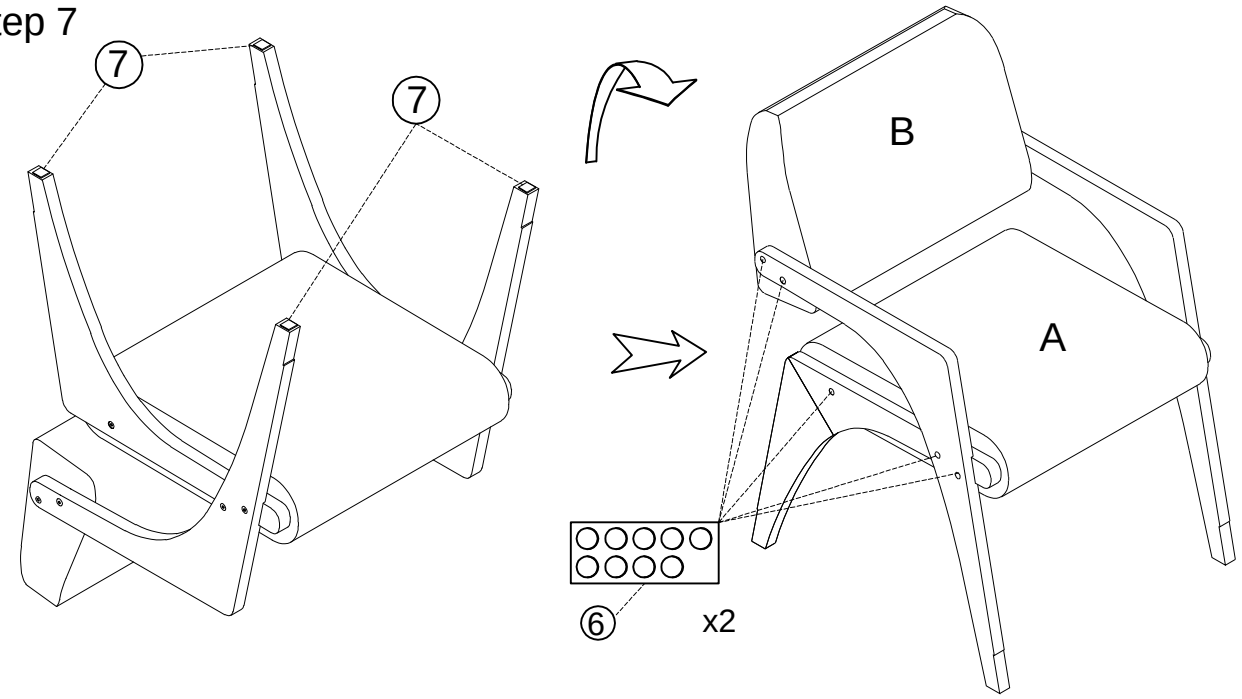

Note: There are already 4 felt pads on the feet, if missing or fall out the felt pad, attach new one⑦.

After checking the chair, if no problem, tighten all the bolts. Stand the chair up. Place the chair on a LEVEL SURFACE to check for wobbles .
After inspection, attach the cover stickers 6 into the bolt holes.

Step 8

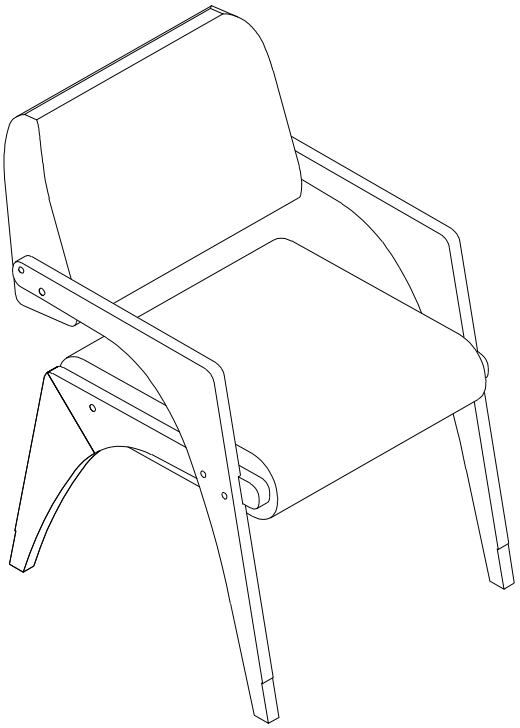

Your chair is ready for use .
This chair can only be used on a flat, level surface.