# GLOBAL PROCUREMENT AND MARKETING LIMITED

## Florida Bed

| Assembly Instructions – Please keep for future reference | BEDFLO3WT | BEDFLO3GY |
|---|---|---|

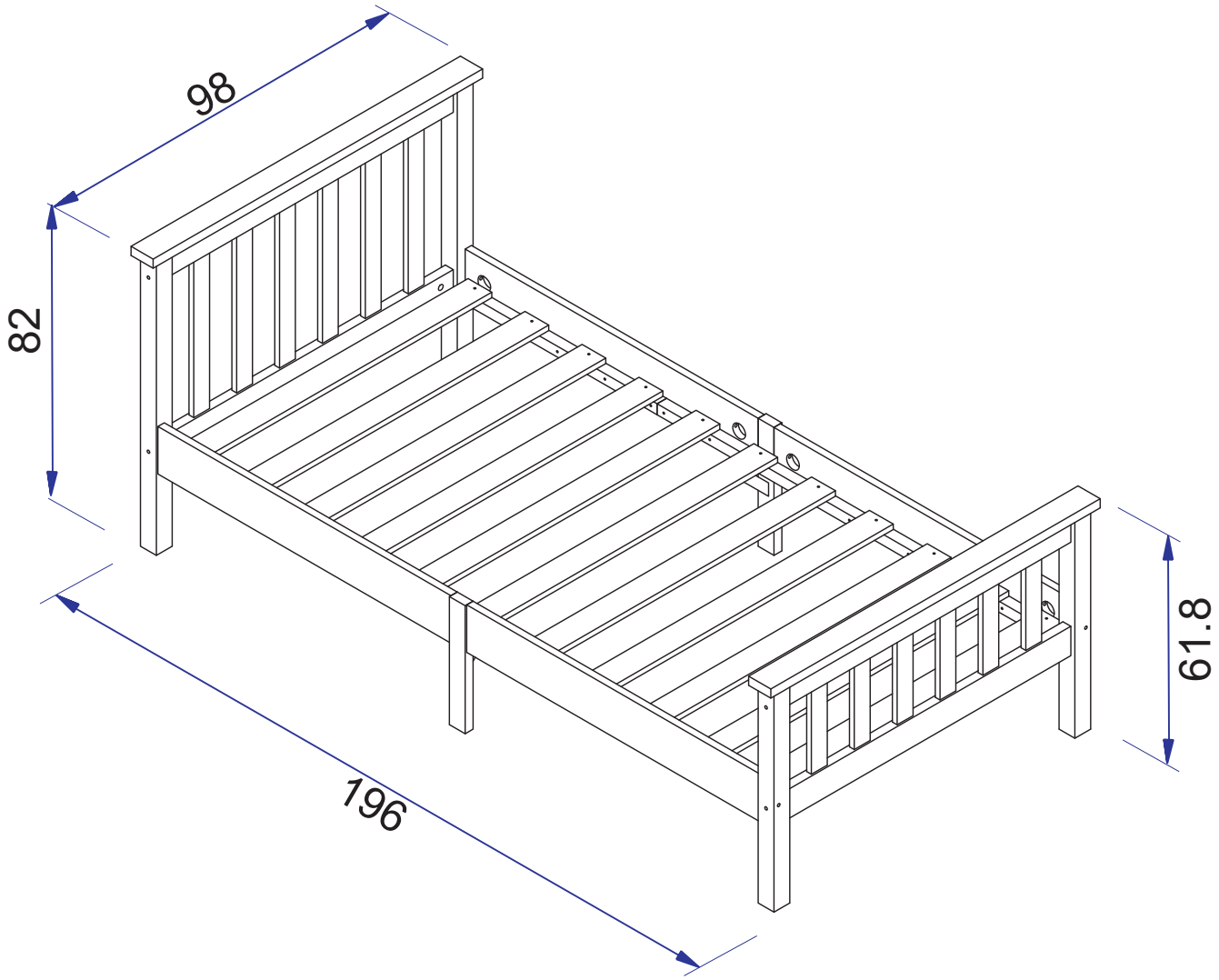


| Dimensions | No. people | Assembly Time | SKU # |
|---|---|---|---|
| Width: 199 cm<br>Depth: 98 cm<br>Height: 81.8 cm | | 40 mins (approx.) | BEDFLO3WT<br>BEDFLO3GY |

*thank you*

For purchasing this **GPM Limited** product

**Important**

- PLEASE READ THESE INSTRUCTIONS FULLY BEFORE STARTING ASSEMBLY
- PLEASE DO NOT THROW THE PACKAGING AWAY UNTIL YOU ARE SATISFIED WITH PURCHASE, GOODS NEED TO BE RETURNED IN ORIGINAL PACKAGING.

If you need help or have damaged or missing parts, please email **aftersales@gpmfurniture.co.uk**

# ⚠ Safety and Care Advice

**Important**

- PLEASE READ THESE INSTRUCTIONS FULLY BEFORE STARTING ASSEMBLY
- PLEASE DO NOT THROW THE PACKAGING AWAY UNTIL YOU ARE SATISFIED WITH PURCHASE, GOODS NEED TO BE RETURNED IN ORIGINAL PACKAGING.

- Check you have all the components and tools listed on pages 4 and 5.
- Remove all fittings from the plastic bags and separate them into their groups.
- Keep children and animals away from the work area, small parts could choke if swallowed.
- Make sure you have enough space to lay out the parts before starting.
- Do not stand or put weight on the product, this could cause damage.
- Assemble the item as close to its final position (in the same room) as possible.
- Assemble on a soft, level surface to avoid damaging the unit or your floor.
- We do not recommend the use of power drill/drivers for inserting screws, as this could damage the unit. Only use hand screwdrivers.

- Dispose of all packaging carefully and responsibly.

**Care and Maintenance**

- Only clean using a damp cloth and mild detergent, do not use bleach or abrasive cleaners.
- From time to time check that there are no loose screws on this unit.
- This product should not be discarded with household waste. Take to your local authority waste disposal centre.

If kept outside please ensure in the winter months that the product is correctly covered or put away into a dry environment to prevent corrosion, weathering or damage.

If your product is not designed to be outside, we recommend that it is always kept indoors in a dry environment.

# Components - Panels

**Please check that you have all the components listed below before constructing your item.**

| Part No | Description | Qty | Size (mm) | Thickness (mm) |
|---|---|---|---|---|
| 1 | HIGH LEG | 1 | 800x40 | 30 |
| 2 | HIGH LEG | 1 | 800x40 | 30 |
| 3 | LOW LEG | 1 | 600x40 | 30 |
| 4 | LOW LEG | 1 | 600x40 | 30 |
| 5 | HEADBOARD VERTICAL BAR | 6 | 450x45 | 15 |
| 6 | FOOTBOARD | 2 | 880x45 | 18 |
| 7 | HEADBOARD | 2 | 880x45 | 18 |
| 8 | BEDSIDE CENTRAL LEG | 2 | 340x60 | 20 |
| 9 | BEDSIDE | 4 | 920x90 | 18 |
| 10 | BEDSIDE STRIP | 6 | 630x25 | 20 |
| 11 | SLATS | 11 | 900x60 | 13 |
| 12 | SUPPORT | 2 | 160x45 | 18 |
| 13 | HEADBOARD STRIP | 2 | 980x45 | 18 |
| 14 | FOOTBOARD VERTICAL BAR | 6 | 250x45 | 15 |

# Exploded View

If you have damaged or missing components,
email: **aftersales@gpmfurniture.co.uk**

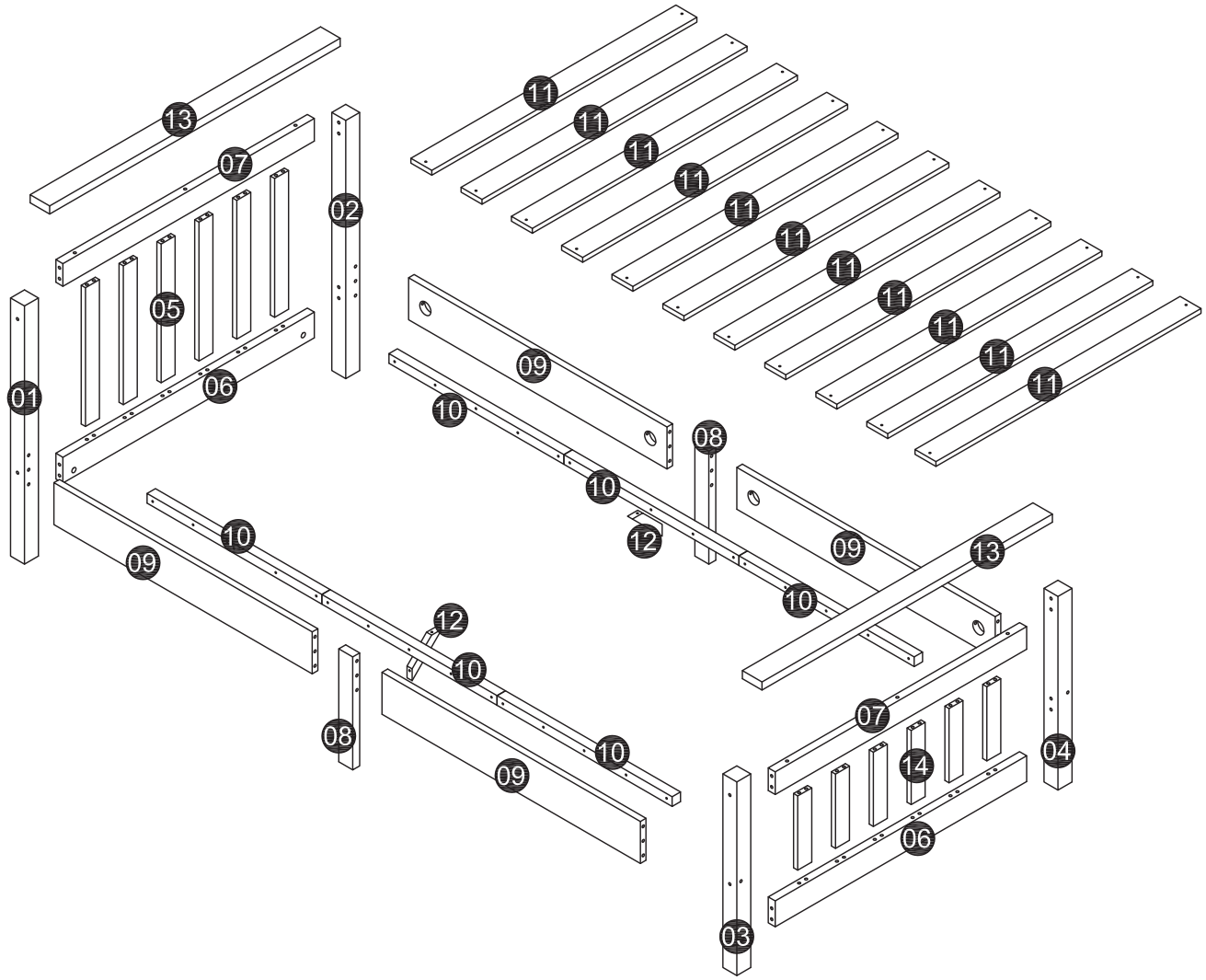


**Important** – Please read these instructions fully before starting assembly

If you need help or have damaged or missing parts, please email **aftersales@gpmfurniture.co.uk**

# Components - Fixings

If you have damaged or missing components,
email: **aftersales@gpmfurniture.co.uk**

**Please check that you have all the components listed below before constructing your item.**

**Note:** The quantities below are the correct amount to complete the assembly. In some cases more fittings may be supplied than are required.

| | | | | | | | |
|---|---|---|---|---|---|---|---|
| **(A)** | Wooden dowel x72 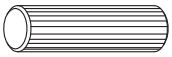 ∅8 x30mm | **(B)** | Screw x56 ∅4 x30mm | **(C)** | Screw x4 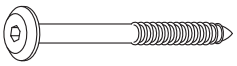 M6 x90mm | **(D)** | Screw x6 M6 x55mm |
| **(E)** | Bolt x8 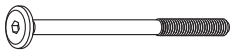 M6 x80mm | **(F)** | Nut x 4 | **(G)** | Allen key x1 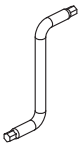 | **(H)** | Bolt bar x2 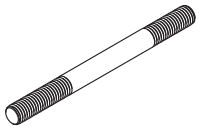 |
| **( I )** | Nut x8 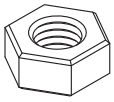 | **(J )** | Half moon washer x8 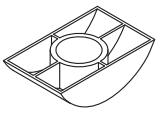 | **(K)** | Spanner x1 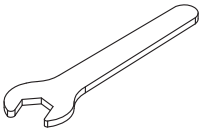 | **(L )** | Washer x8 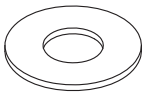 |

## Tools Required

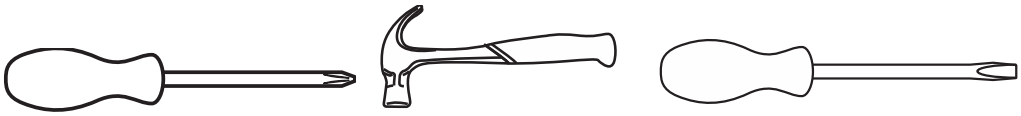

## **Ruler** – Use this to measure your screws (mm)

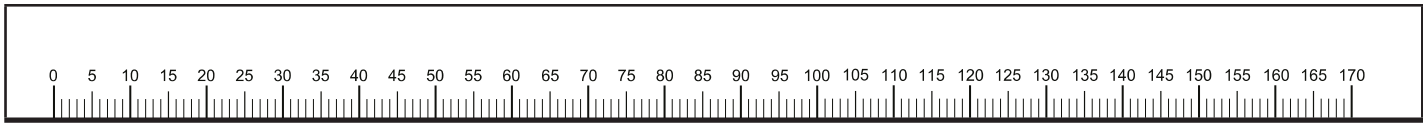


**Important** – Please read these instructions fully before starting assembly

If you need help or have damaged or missing parts, please email **aftersales@gpmfurniture.co.uk**

# Assembly Instructions

If you have damaged or missing components,
email: **aftersales@gpmfurniture.co.uk**

## 01

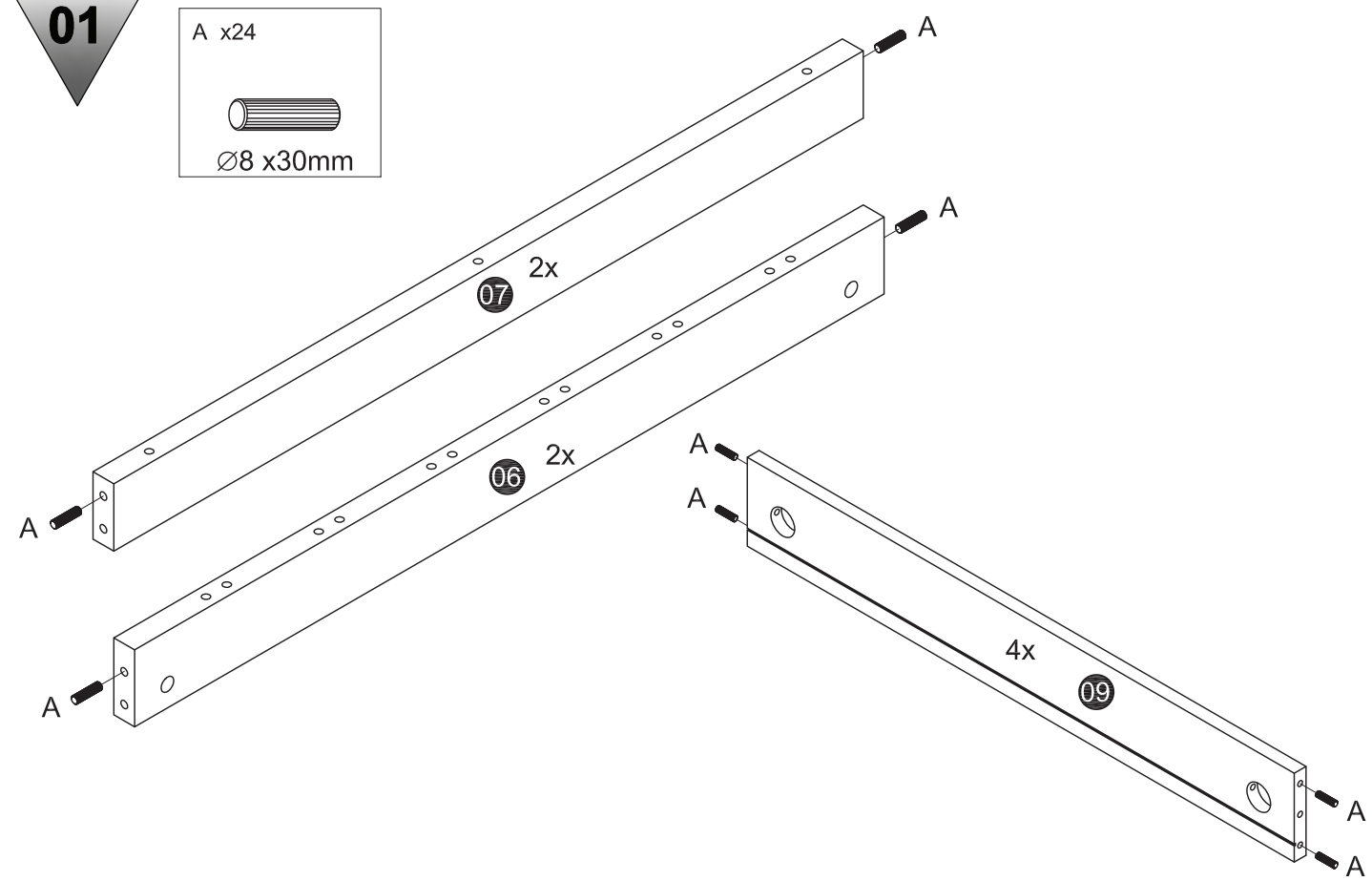


## 02

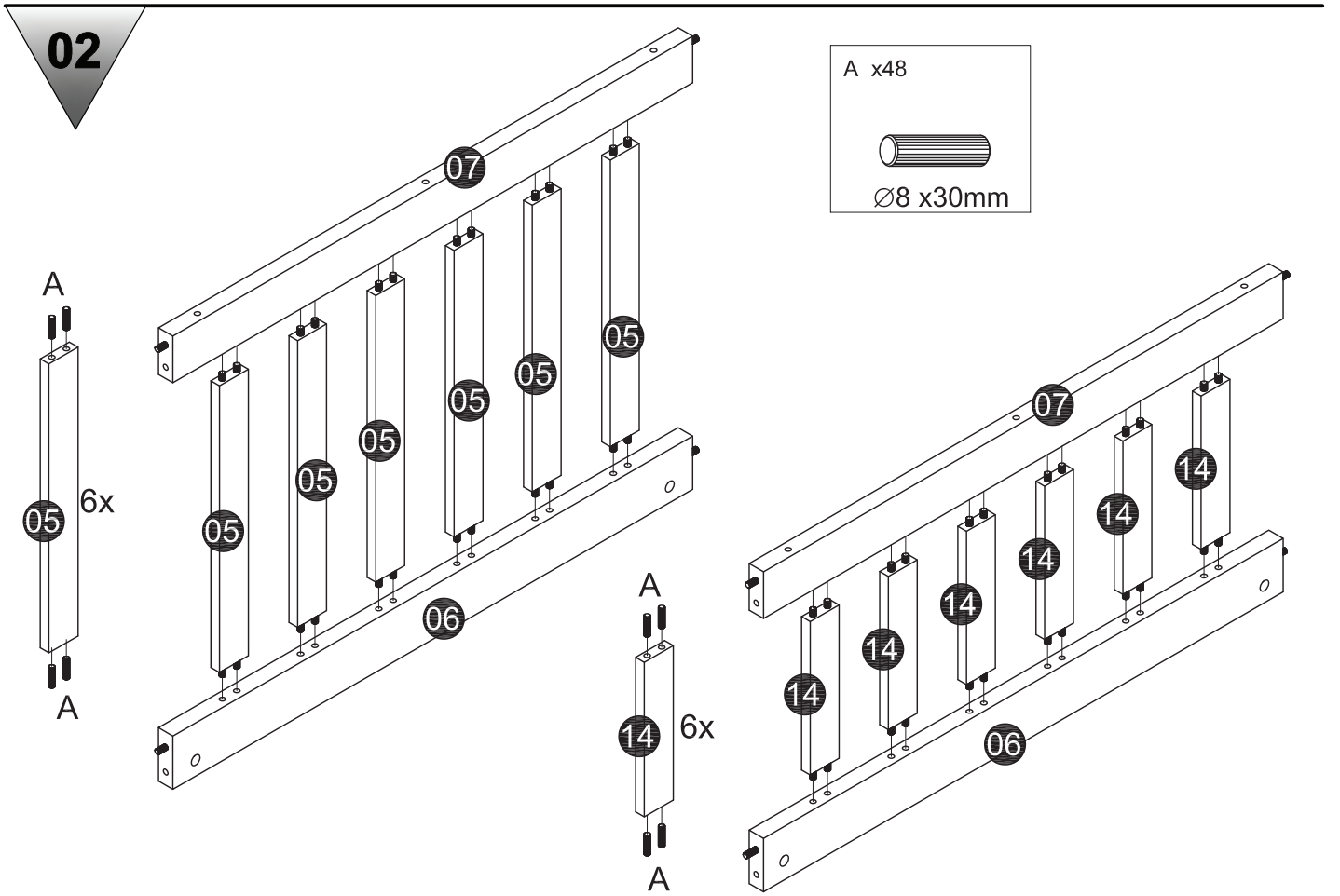

## 03

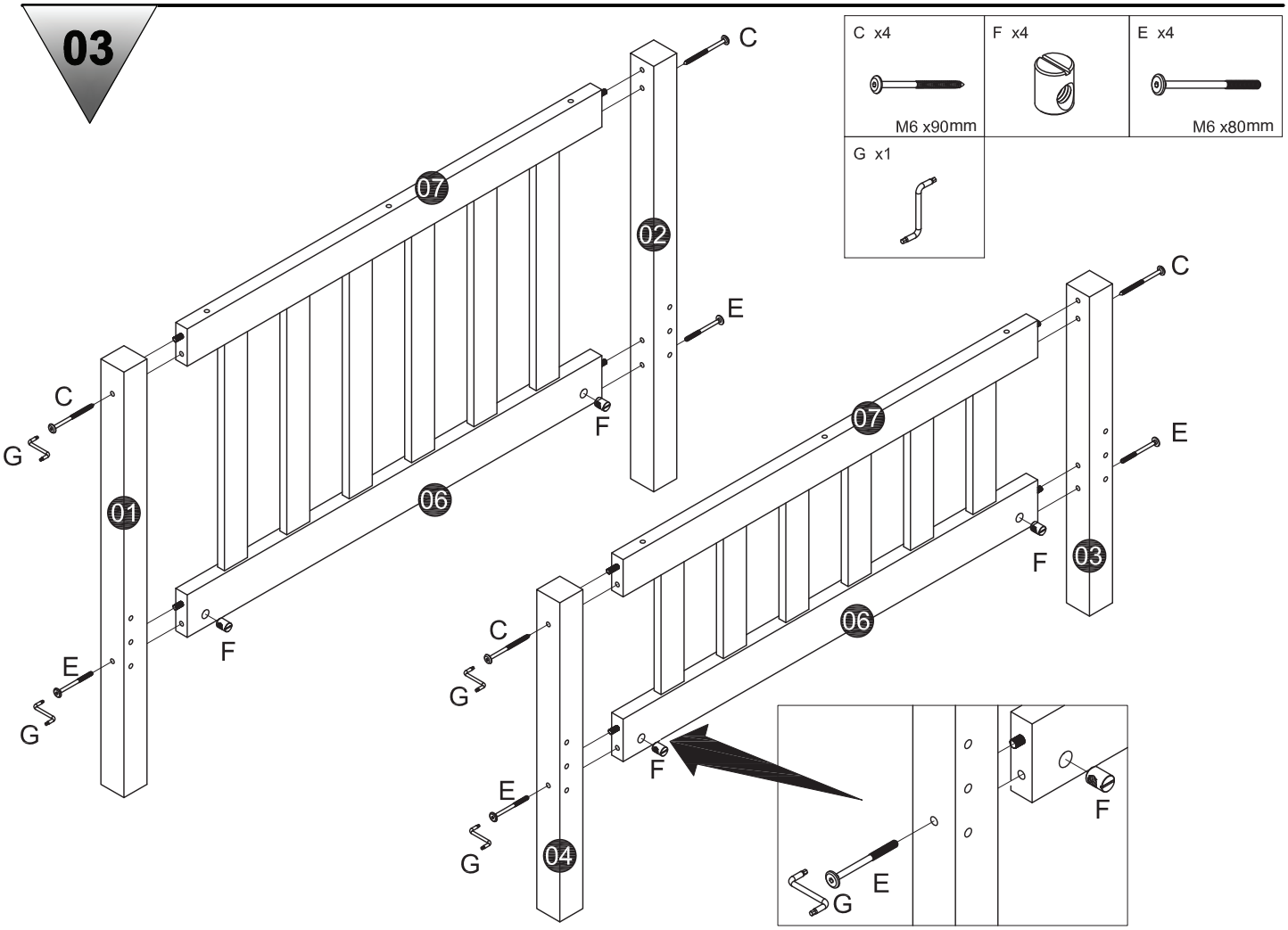
C x4
M6 x90mm
F x4
E x4
M6 x80mm
G x1
01
02
03
04
06
07
C
E
F
G

## 04

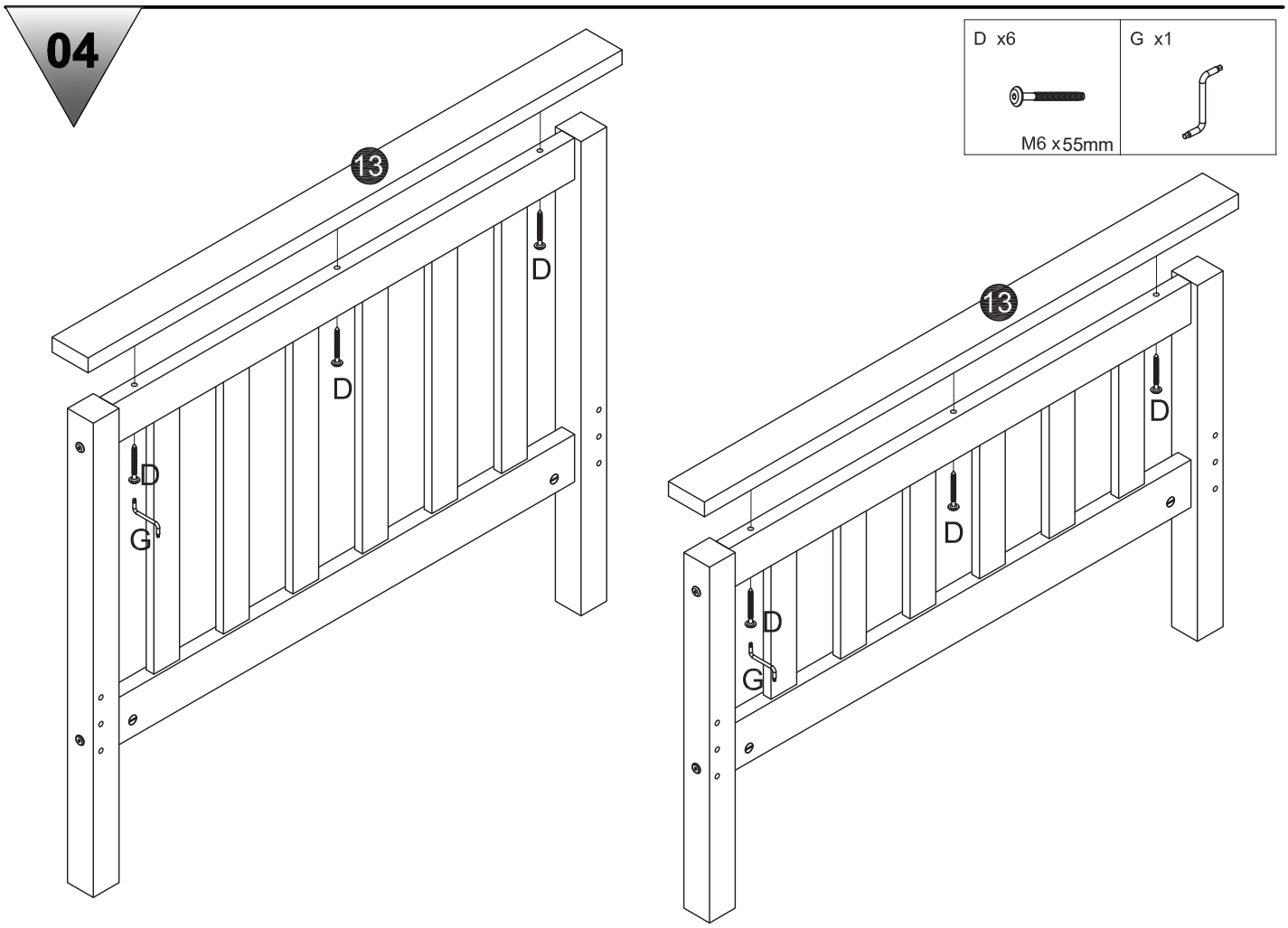
D x6
M6 x55mm
G x1
13
D
G

## 05

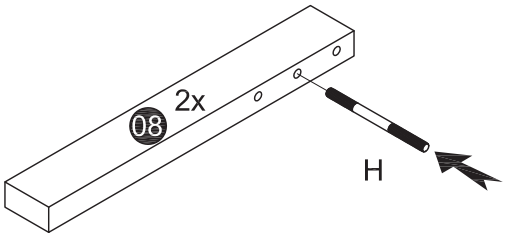
08
2x
H

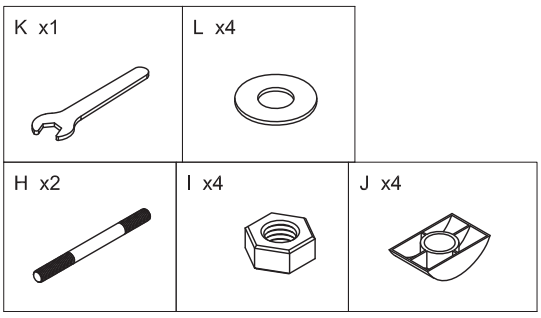
K x1
L x4
H x2
I x4
J x4

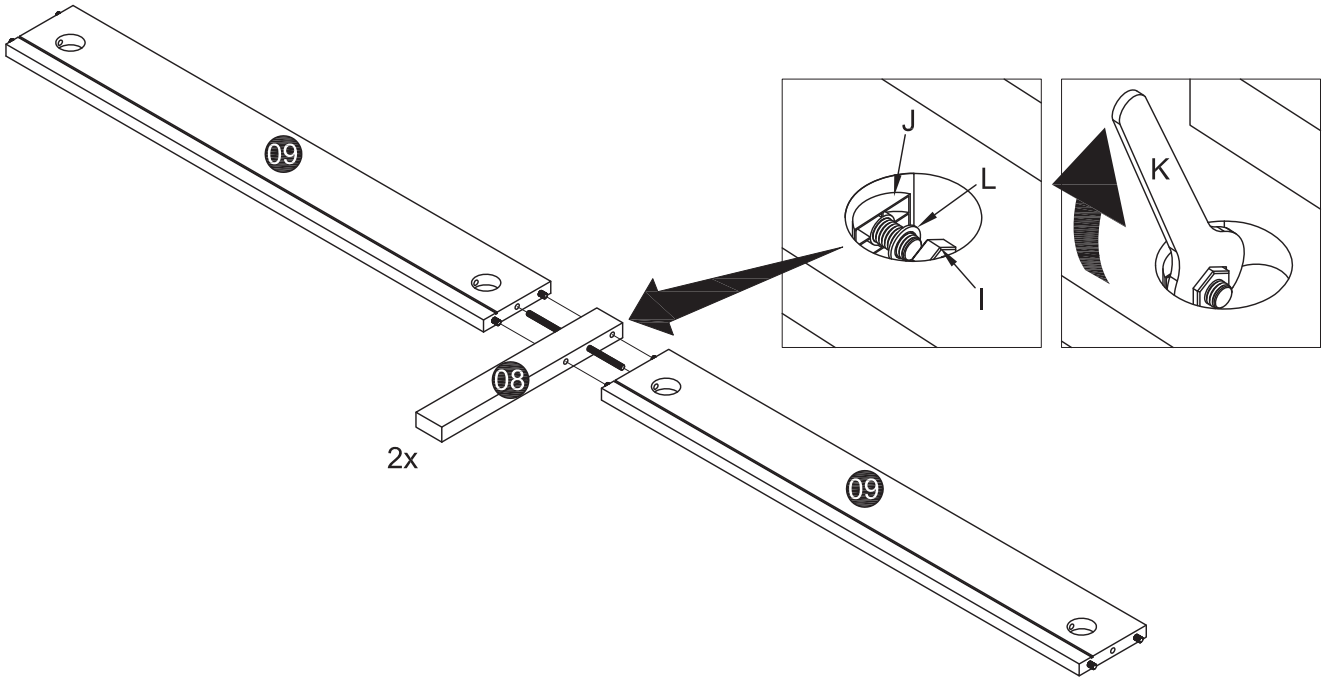
09
J
L
I
K
08
2x
09

## 06

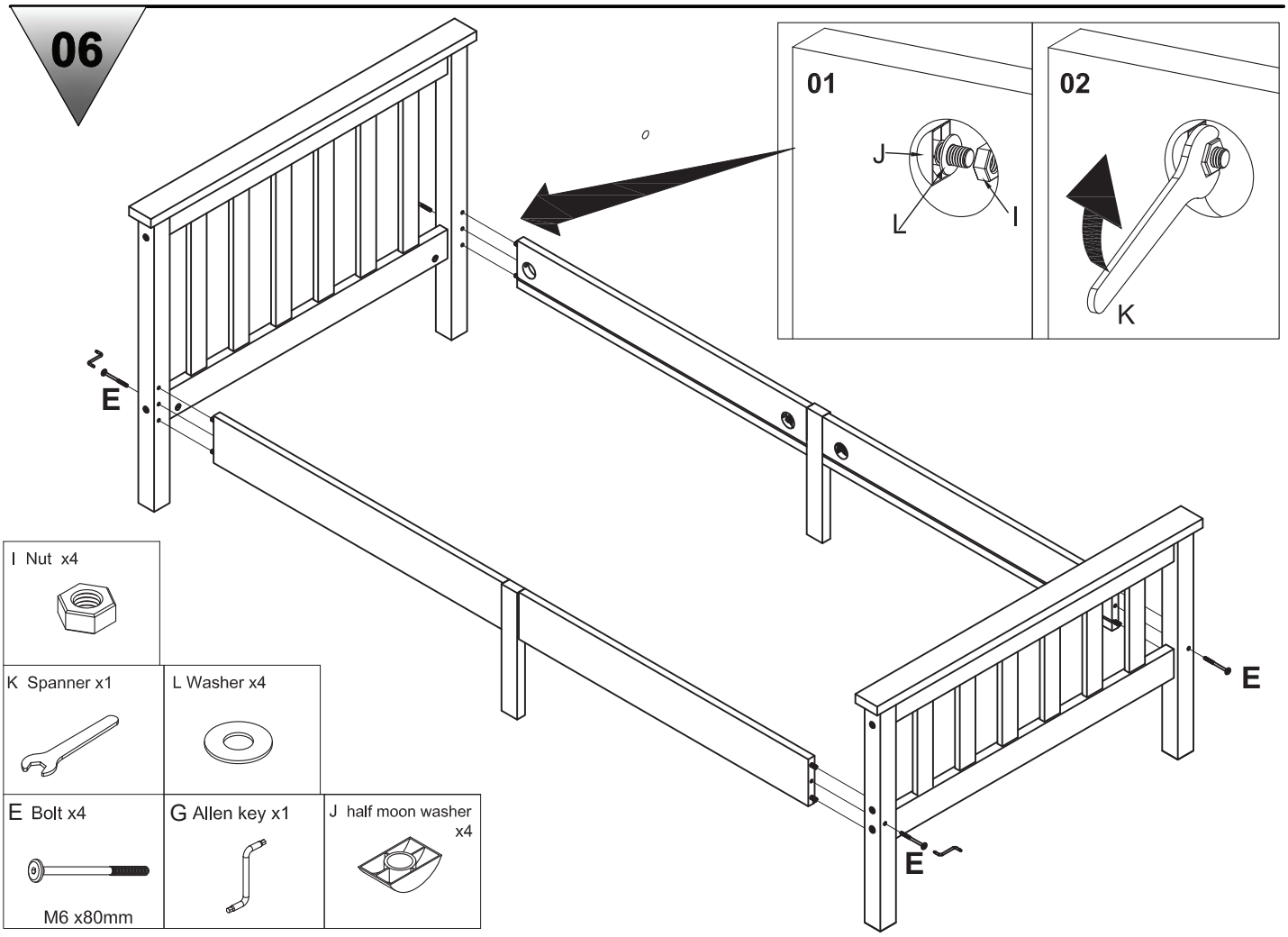
01
J
L
I
02
K
E
E
E
I Nut x4
K Spanner x1
L Washer x4
E Bolt x4
M6 x80mm
G Allen key x1
J half moon washer x4

## 07

B Screw x30

∅4 x30mm

The middle of the bedside support is aligned with the slotted line on the inside of the bedside .

## 08

B x22

∅4 x30mm

WARNING !

Press the middle of the bed sides and tighten the screw first!!!
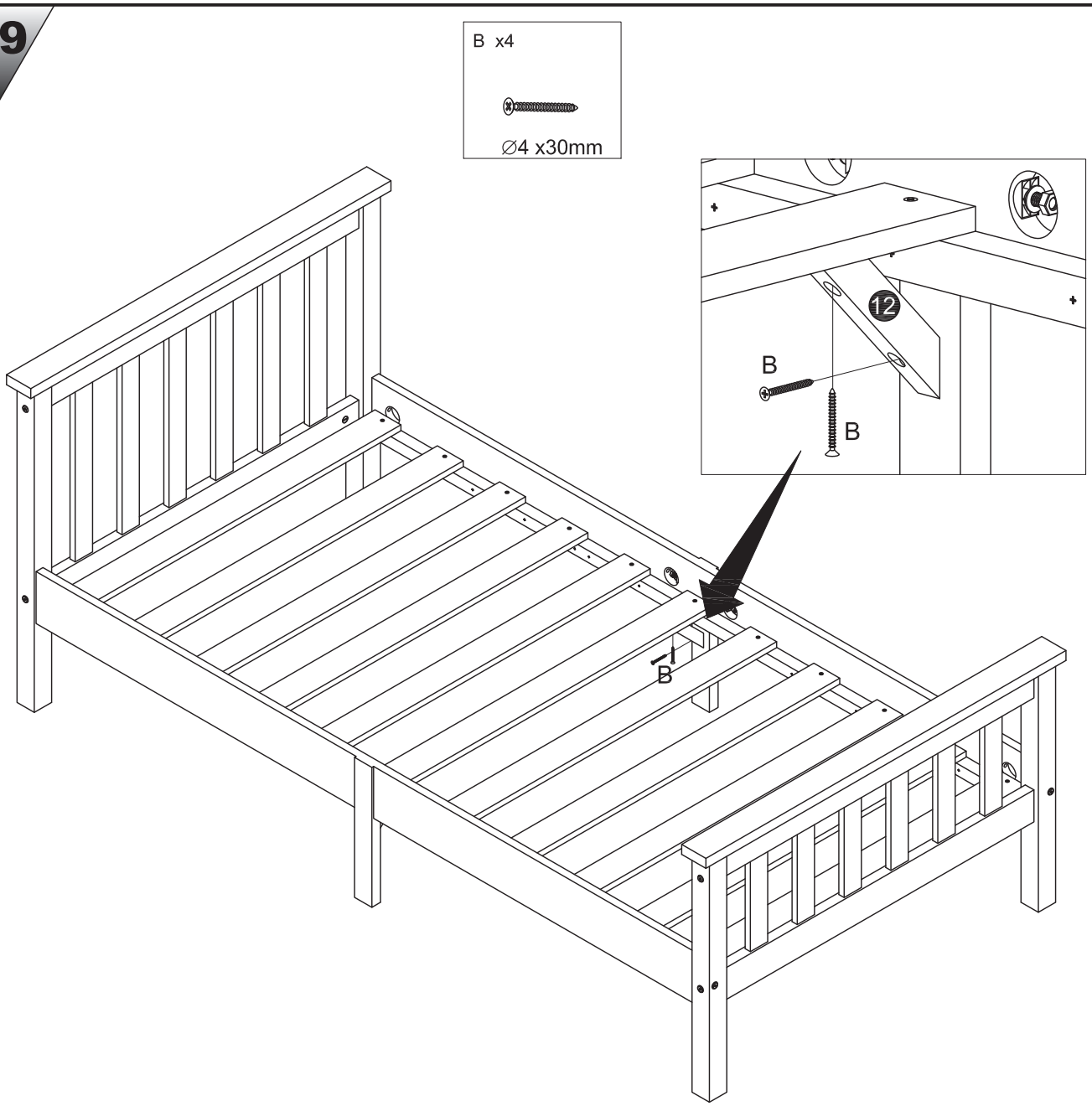
## 09