ASSEMBLY INSTRUCTIONS
CROXLEY 2 DRAWER RATTAN BEDSIDE

IMPORTANT : READ THESE INSTRUCTIONS CAREFULLY BEFORE ATTEMPTING TO ASSEMBLE OR USE YOUR CROXLEY 2 DRAWER RATTAN BEDSIDE.

PLEASE KEEP THESE INSTRUCTIONS FOR FUTURE REFERENCE.

ASSEMBLY:
Assembly should be carried out with this item laying flat, not standing upright.
Assemble on a soft, clean surface to prevent damages.
To erase the numbers printed on the pieces, use the rubber inside the accessories pack.

HEALTH & SAFETY:
DO NOT use this product if any parts are missing, damaged or worn.
DO NOT use this product unless all fixings are secured.
Always use on a level, even surface.

CARE & MAINTENANCE:
Periodically check all screws & fixings to ensure they are secure.
DO NOT push this product as this will cause damage.
Always lift this product with two people to repositions.
Keep any sharp objects away from this product.

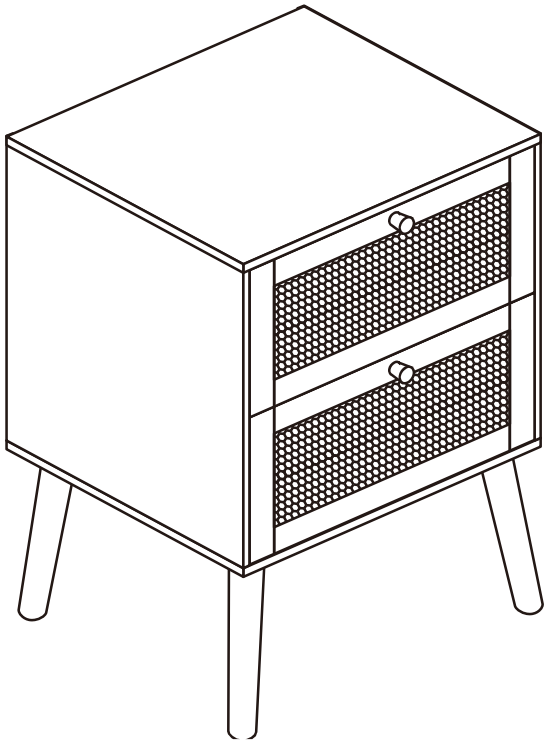

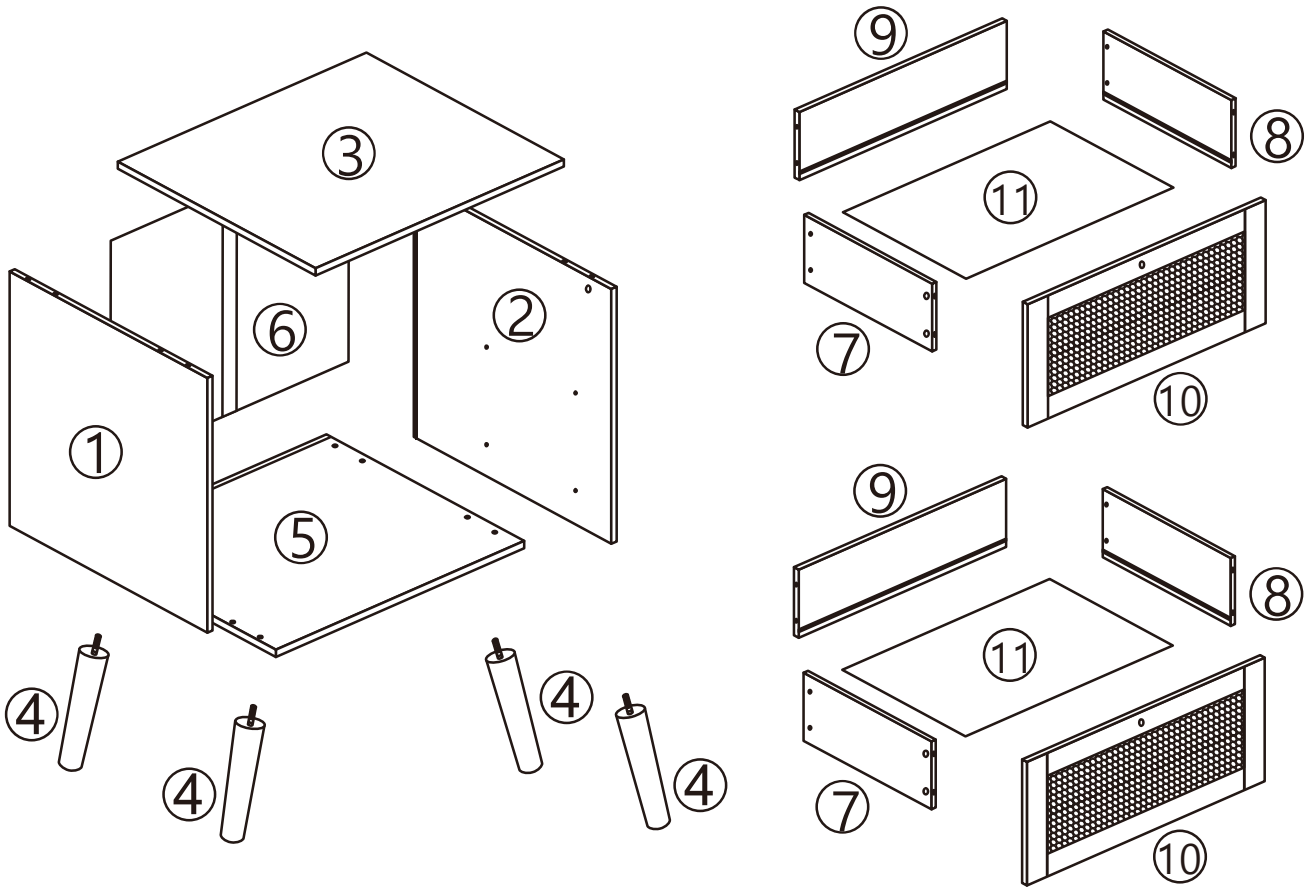
3
6
2
1
5
4
4
4
4
9
8
11
7
10
9
8
11
7
10

Parts List

Part	Description	Box	Qty
1	Side Panel(Left)	1	1
2	Side Panel(Right)	1	1
3	Top Panel	1	1
4	Wooden Leg	1	4
5	Bottom Panel	1	1
6	Back Panel	1	1
7	Drawer Side(Left)	1	2
8	Drawer Side(Right)	1	2
9	Drawer Back	1	2
10	Drawer Front	1	2
11	Drawer Bottom	1	2

Hardware List

Part	Description	Qty
A	Cam Bolt	12
B	Cam Lock	12
C	Wooden Dowel	8
D	Screw	8
E	Metal Sheet	4
F	Screw	21
G	Screw	20
H	Handle+Screw	2
I	Plastic Wedge+Screw	4
J	Foot pad	4
K	Hole sticker	8
L	Washer	1
M	Safe strap	1
N	Screw	4
O	Allen Key	1
DL	Rail	2
DR	Rail	2
CL	Rail	2
CR	Rail	2

**** You will need a small mallet and a screwdriver for assembly.**
**** Some screws and wooden dowel may remain.**
**** Note : To secure the item to the wall.**

Step 1: Attach drawer back panel(9) to drawer side paanel(7),(8) using hardware D;
Attach the bottom panel(11) before assembly the drawer front panel;
Attach the drawer front panel(10) by hardware A,B,K;and then,assemble the handle(H);
Attach the hardware(DL),(DR) by hardware G.
DO NOT use any power tools as this may damage the frame and will invalidate any claim.

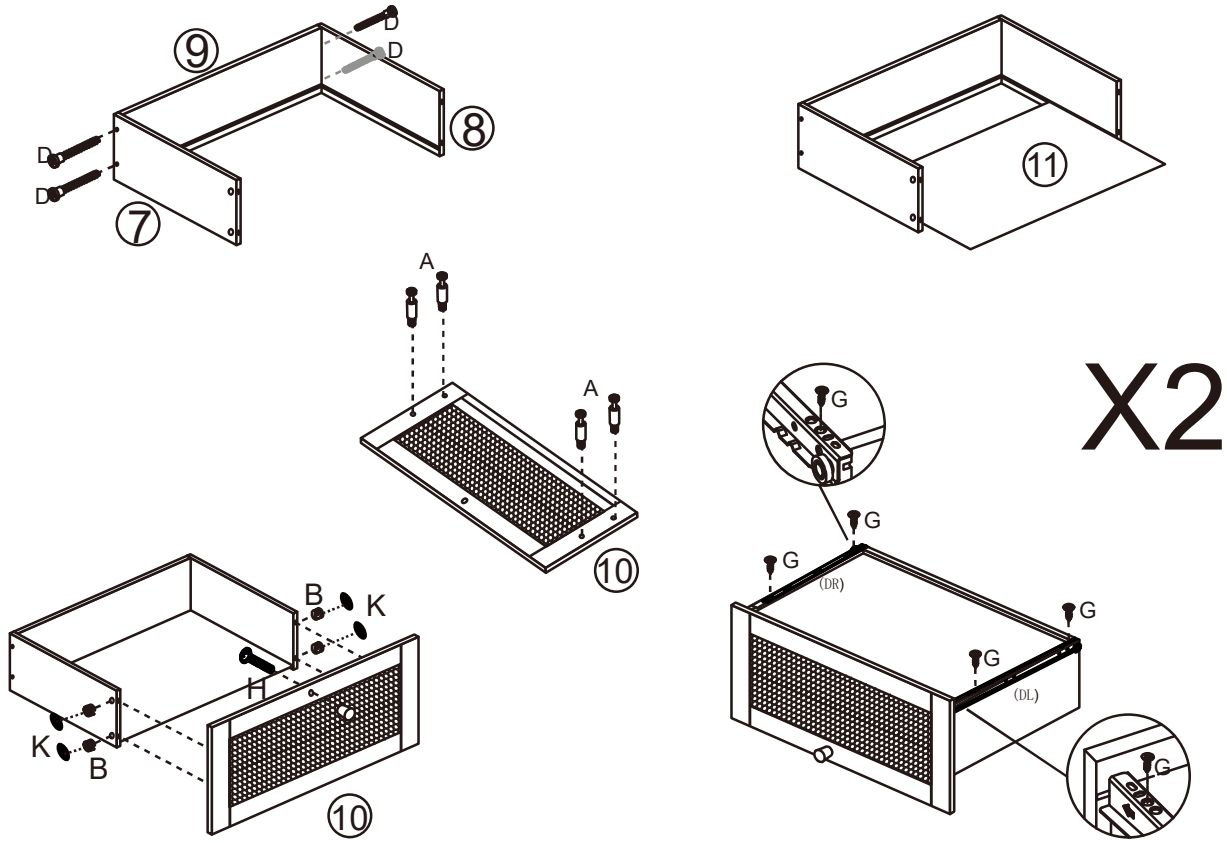

Step 2: Attach the hardware(CL),(CR) on side panel(1),(2) by hardware G.
DO NOT use any power tools as this may damage the frame and will invalidate any claim.

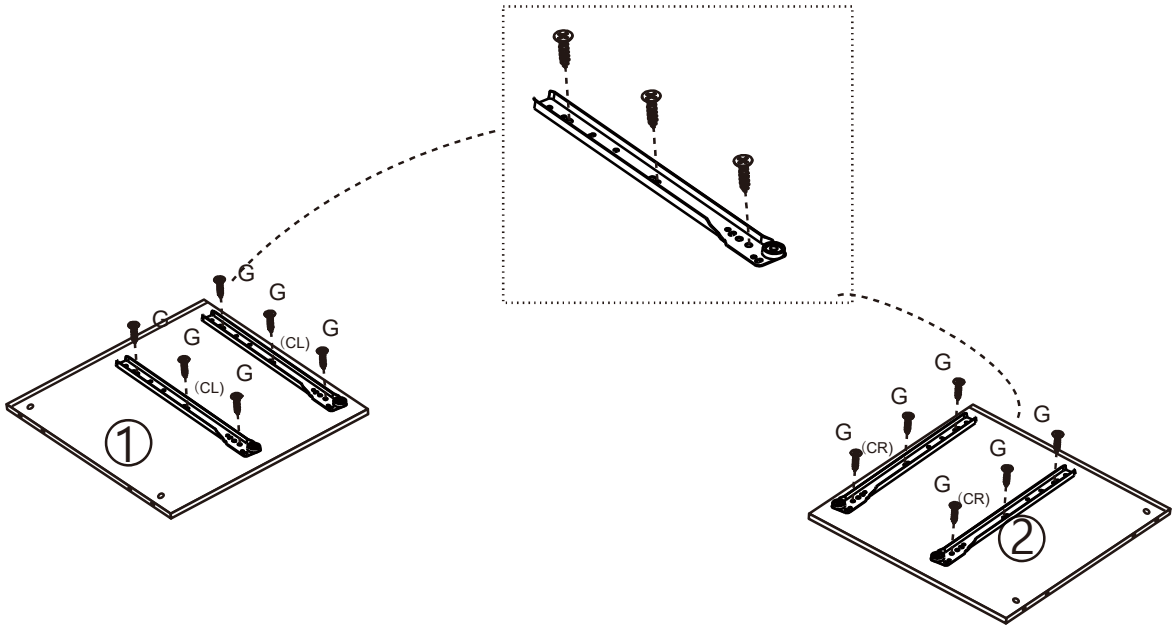

Step 3: Assemble top panel(3) with side panel(1),(2) by hardware A,B,C.

DO NOT use any power tools as this may damage the frame and will invalidate any claim.

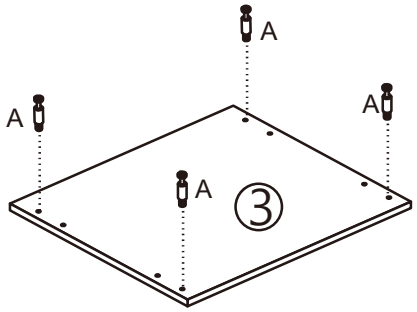

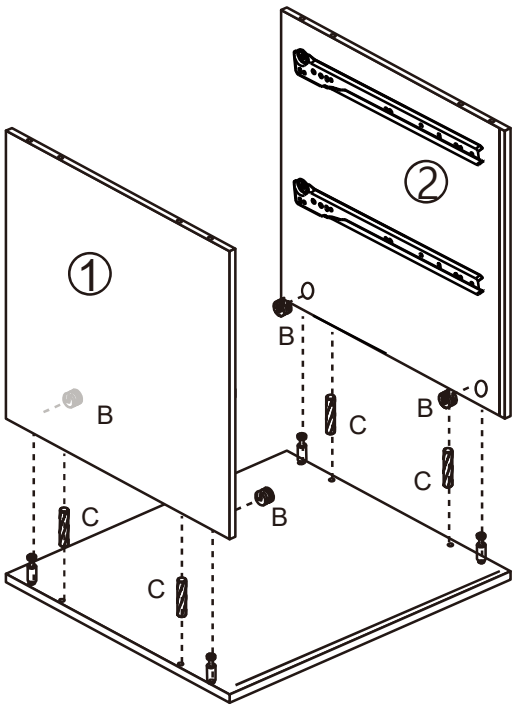

Step 4: Attach the back panel(6) before assemble the bottom panel;

Attach the bottom panel(5) by hardware C,N.

DO NOT use any power tools as this may damage the frame and will invalidate any claim.

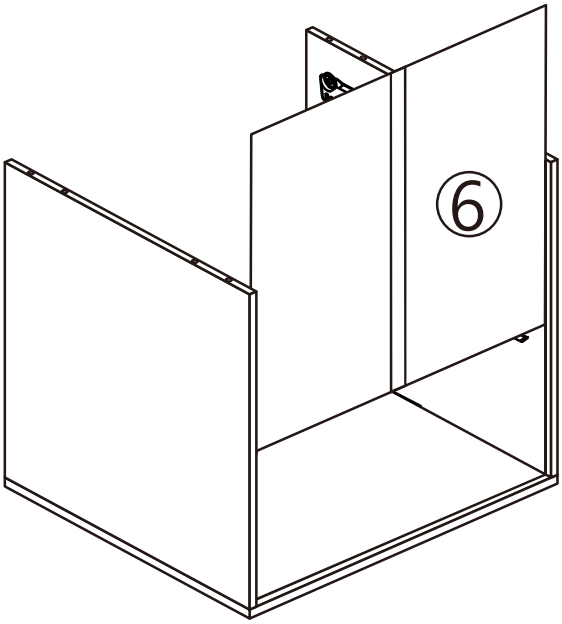

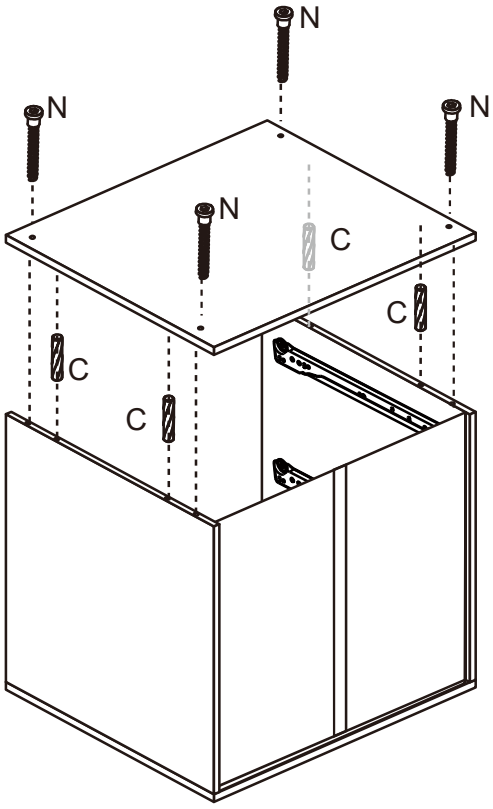

Step 5: Attach the leg sheet(E) by hardware F.

DO NOT use any power tools as this may damage the frame and will invalidate any claim.

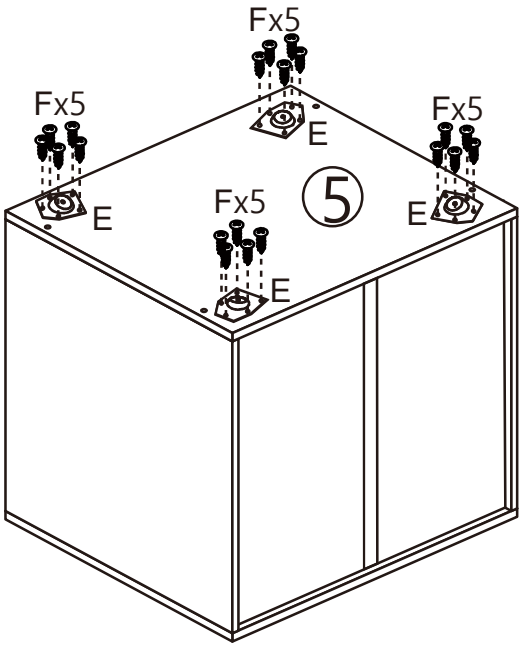

Step 6: Attach the legs(4),and then attach the pad(J);

Attach the hardware I on the back of the item.

DO NOT use any power tools as this may damage the frame and will invalidate any claim.

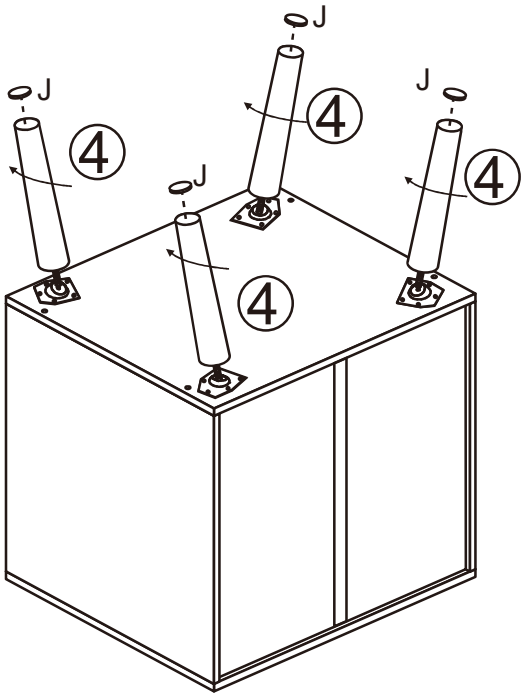

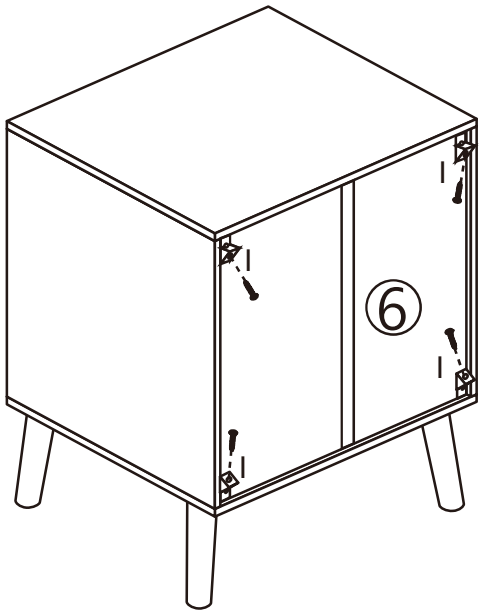

Step 7: Secrue the safty belt(M) by hardware F,L.
DO NOT use any power tools as this may damage the frame and will invalidate any claim.

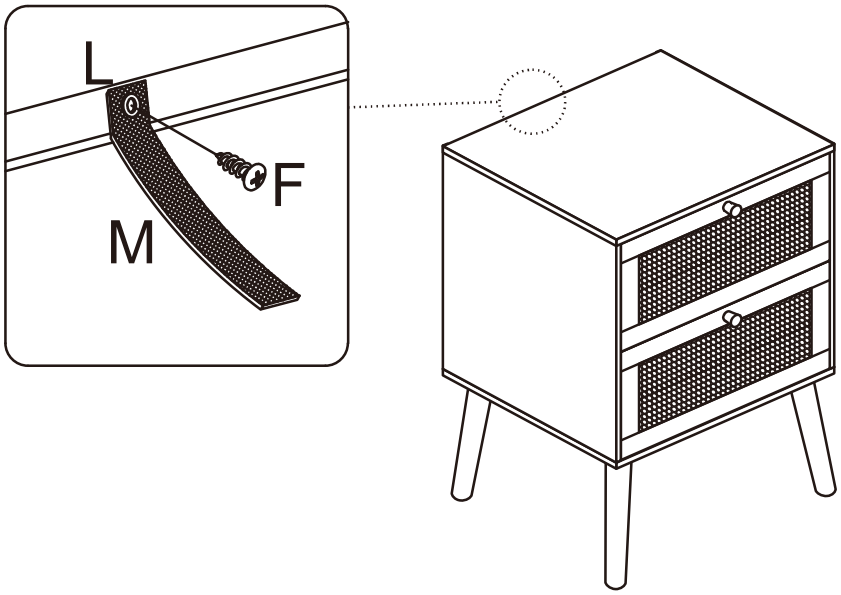

PLEASE NOTE that wall fixings are not supplied as different wall materials require different fixing devices. You must use fixings devices suitable for the type of wall you intend to mount product to. Ensure the head of any screw used has a diameter greater than the mounting hole and the fixing is safe and secure before use.