ASSEMBLY INSTRUCTION FOR FURNITURE

Thank you for purchasing the quality product. Be sure to check all packing material carefully for small parts which may have come loose inside the carton during shipment. Separate, identify and count all parts and metal hardware. Compare all parts list to be sure all parts are present. If any part(s) are missing or damaged, please contact your local furniture dealer. For efficient and speedy service, please indicate the model number and code letter of part(s) needed.

***** Do not fully tighten screws until fully assembled *****

PARTS LIST

NO.	DESCRIPTION	SKETCH	Q'TY (PCS)
①	MARBLE TABLE TOP		1
②	TABLE LEG		4

HARDWARE LIST

NO.	DESCRIPTION	SKETCH	Q'TY (PCS)
Ⓐ	ALLEN KEY Ø5/16''		1
Ⓑ	BOLT Ø5/16'' x 3 ¼''		8
Ⓒ	FLAT WASHER Ø5/16'' x 7/8''		8
Ⓓ	LOCK WASHER Ø5/16'' x ½''		8

ATTENTION:

***** Some number parts listed on the instruction sheet may not be in parts bag as they may already be assembled. Carefully check parts and packing material prior to ordering replacements.**

How to assemble:

STEP 1:

Place the marble table top (1) face down on a clean and soft surface. Assemble the Legs (2) to the marble table top (1) by using Allen key (A) with hardware B,D, and C.

DO NOT TIGHTEN THE SCREWS

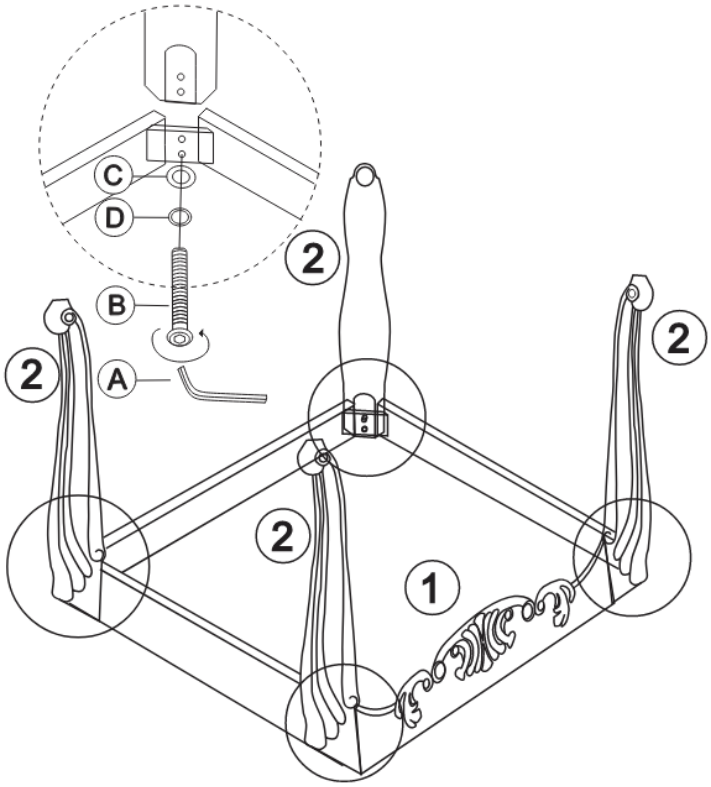

STEP 2:

To level the table, place the table up right on a flat surface then tighten all screws by using Allen Key (D).

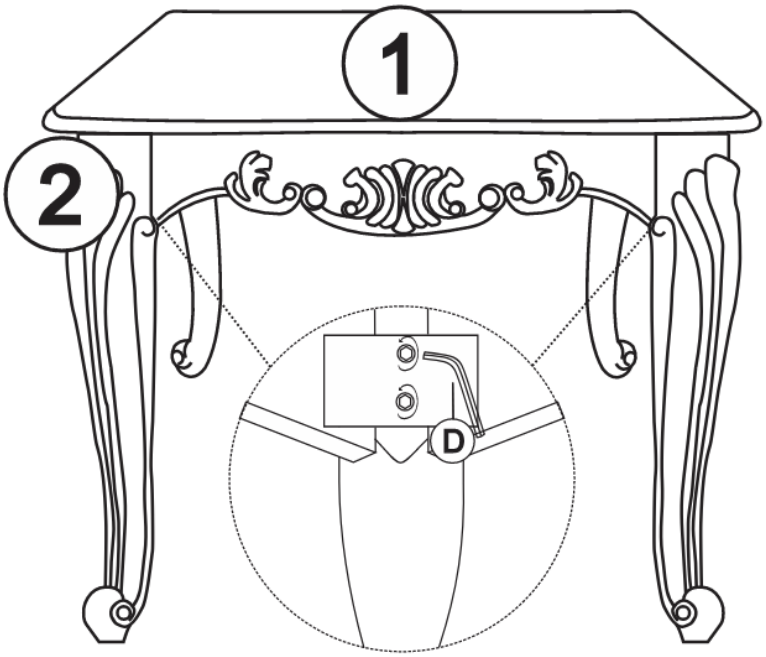

COMPLETED