Parts and Damage Replacement Procedure

1. Please inspect your purchase immediately.
2. This procedure covers product purchased from an authorized Roundhill Reseller and was received in its originally sealed carton.
3. If you find a part missing or damaged, you have a 30-day window in which to order a replacement part from the date on your purchase receipt.
4. You have 3 ways to do this. You will need a copy of your purchase receipt.
   a. By Fax: Fax the parts order form below and along with your receipt to 614-878-7918
   b. By Email: Email the order form and along with your receipt to: [redacted]
   c. By Mail: Fill out the parts order form below and along with a copy of your receipt send it to Roundhill furniture parts department 3640 Zane Trace Drive, Columbus OH 43228
5. Once this order is sent in, you will be notified if the part(s) you are requesting can or cannot be shipped within 7-10 business days.

A COPY OF YOUR PURCHASE RECEIPT OR INVOICE MUST BE ATTACHED TO THIS ORDER FORM.
NO ORDERS WILL BE PROCESSED WITHOUT PROOF OF PURCHASE.

NAME: _____

ADDRESS: _____ (No Post Office Boxes)

CITY: _____ STATE: _____ ZIP: _____

PHONE: _____ FAX: _____

EMAIL: _____

REASON FOR REPLACEMENT/PLEASE CHECK APPROPRIATE BOX.

( ) Damaged /scratched, cracked, broken, crushed, etc.
( ) Mechanical malfunction/ drawer glides, swivel mechanisms, lid stays, etc.
( ) Missing pieces
( ) Unfinished surface
( ) Wrong color
( ) Other

IF MORE THAN ONE MODEL NUMBER IS LISTED ABOVE, PLEASE SPECIFY THE EXACT MODEL NUMBER OF YOUR ITEM IN THE SPACE PROVIDED BELOW.

Model Number	Part Letter Code	Quantity

ASSEMBLY INSTRUCTIONS
ITEM NO . T 407

Please read instructions carefully

Remove all wrapping materials, staples and packing straps from the carton. Refer to Parts List and Hardware List and ensure they are complete before you start assembling. Place all wooden parts on a clean, flat and soft surface (e.g carpet or rug) to prevent parts from being scratched.

CAUTIONS: 1) DO NOT FULLY TIGHTEN BOLTS AND NUTS UNTIL ALL PARTS HAVE BEEN ASSEMBLED.
2) DO NOT OVER-TIGHTEN BOLTS AND NUTS UNTIL ALL PARTS HAVE BEEN ASSEMBLED.
3) KEEP ALL HARDWARE PARTS OUT OF REACH OF CHILDREN.

PARTS LIST

NO.	COMPONENT	QTY.
P1	LEG BASE	2
P2	PEDESTAL LEG	1
P3	MOUTING PANEL	1
P4	TABLE TOP	1

HARDWARE LIST

NO.	DESCRIPTION	QTY.
H1	JCBC SCREW M6X70MM	4
H2	JCBC SCREW M6X35MM	8
H3	SPRING WASHER	12
H4	FLAT WASHER	8
H5	ADJUSTABLE LEG GLIDE	4
H6	ALLEN KEY	1

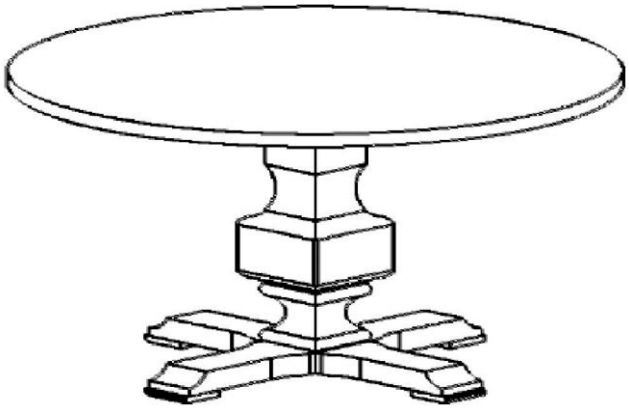

COMPLETE ASSEMBLY

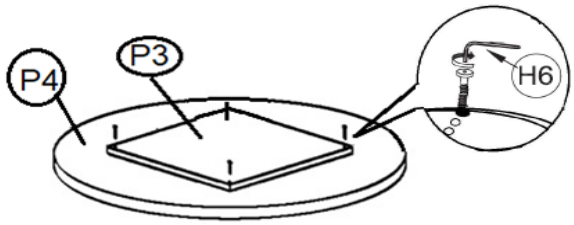

IMPORTANT : Detach Mounting Panel (P3) from table top (P4) before assembling the table

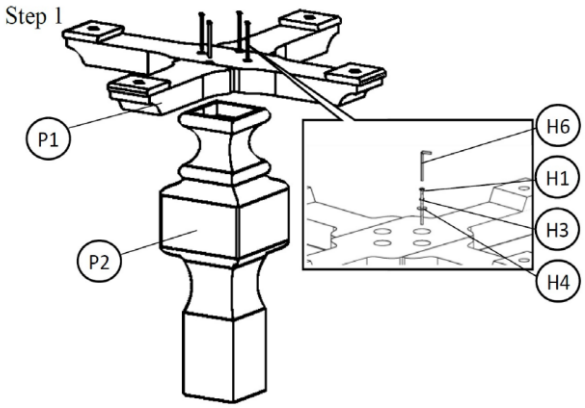

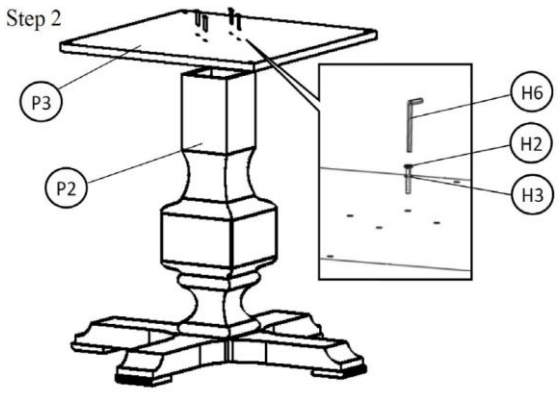

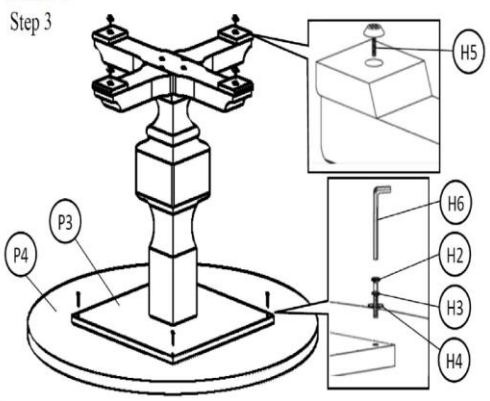

CARE AND MAINTENANCE

SAFETY - To avoid any risk of suffocation to children or animals, dispose off the plastic bags immediately.

CLEANING - Clean with damp cloth and mild detergent. Do not use bleach or abrasive products.

FITTINGS - Tighten bolts and nuts from time to time to ensure all parts of product are securely fitted.