ASSEMBLY INSTRUCTIONS

METAL GARDEN SHED

12(W)x16(D)FT WITH WINDOWS

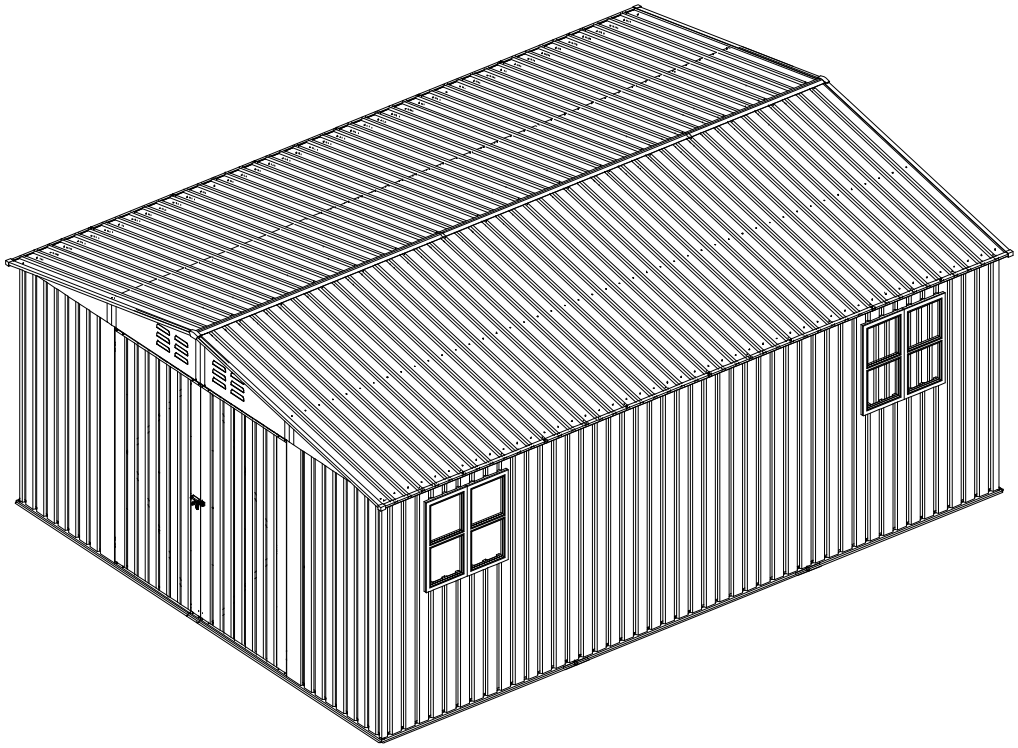

EASYHAWKservice@outlook.com

Our team is available 24/7 to help with any product questions. Contact us anytime!

Recommended to wear gloves to avoid scratches.
Please read the instructions COMPLETELY before assembly.

After opening the package, if you notice a slight deformation in the wall panels, there's no need for concern.
Our material is flexible and can be manually bent back into place.

SAFETY PRECAUTIONS...

Safety precautions MUST be followed at all times throughout the construction of your building!

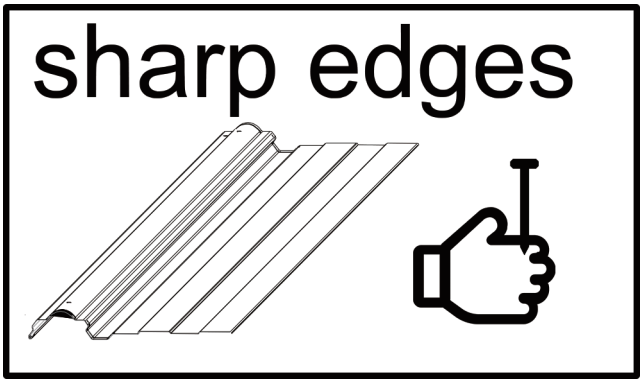

When working with your building's parts, which may have sharp edges, always wear work gloves and eye protection, and put on long sleeves. This helps prevent cuts and injuries during assembly or maintenance.



Exercise caution when using tools during assembly. It's particularly important to be well-versed in the use of any power tools involved in the process.



Ensure that children and pets are kept at a safe distance from the construction area until the building is fully assembled. This precaution minimizes distractions and reduces the risk of accidents.



Wind Advisory:
Avoid assembling your building on a windy day. Large panels can act like sails in the wind, making them hard to control and posing safety risks during construction.

Complete Check:
Before starting assembly, verify that you have all the parts and hardware listed. A partially assembled building can be vulnerable to damage, even from mild winds.

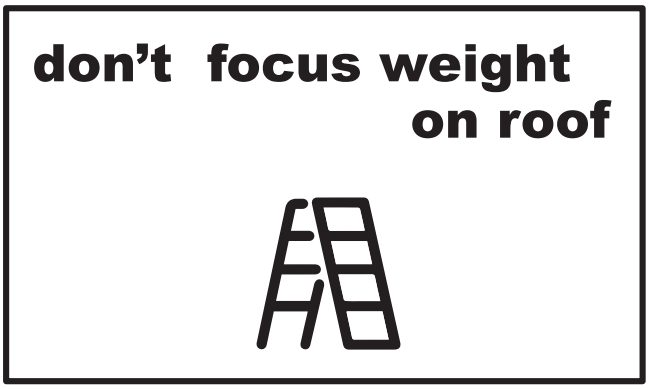

Roof Safety Warning:
Never put your full weight on the building's roof. Always ensure that a step ladder is fully extended and placed on level ground before climbing it.

ASSEMBLY PREPARATION

Please check local building codes regarding footings, location and other requirements before beginning construction. Study and understand this owner's manual of important information and helpful tips for easier and more enjoyable assembly.

Assembly instructions:

Reviewing all instructions and the appropriate information before you begin, make sure following the step sequence carefully for successful results.

Flooring base:

The site must be prepared so that the base of the shed is level all round and checking with a spirit level is required.
The base can be constructed by treated timber or concrete,in order to stop the moisture getting into the shed,The shed is not designed to be built onto lawn directly.Also the ground will get muddy during rainy days.
If a concrete pad is made,it is important that this slopes towards the edges to prevent water ingress.Time must be allowed for any concrete or cement to dry before building the shed on top.
Bases can also be constructed from bricks,blocks,or mounted on a concrete pad.
The bricks or blocks should be cemented onto firm and level concrete footings and the greenhouse frame drilled and screwed to the base.

Parts and Parts List:

Before you start, separate and identify all the parts and hardware to be sure that you have all the necessary parts for your building (refer to the Parts List Page).

Do not attempt to assemble the building if parts are missing because any building left partially assembled may be seriously damaged by light winds.

Safety must be put in the No. 1 position:

1 Select a dry and calm day for your assembly. Team works (Two or more people) are required during the assembly;
2 Wearing safety gloves, eye protection and long sleeves during the assembly to prevent injury; Pay attention to the sharp edge of some parts;
3 Children and pets are not allowed entering into the construction site;
4 Never concentrate your total weight on the roof of the building. When using a step ladder make sure that it is safety;

Care & Maintenance:

1 Keep the shed clean with soft cloth, use water if necessary;
2 Keep the door tracks clear of dirt and other stuff that prevent them from sliding easily.
3 Clean the snow with necessary tools to make sure it is safe to enter into;
Heavy snow may cause collapse, please make sure safety before entering into.
4 The shed is not made for living but storing stuff.

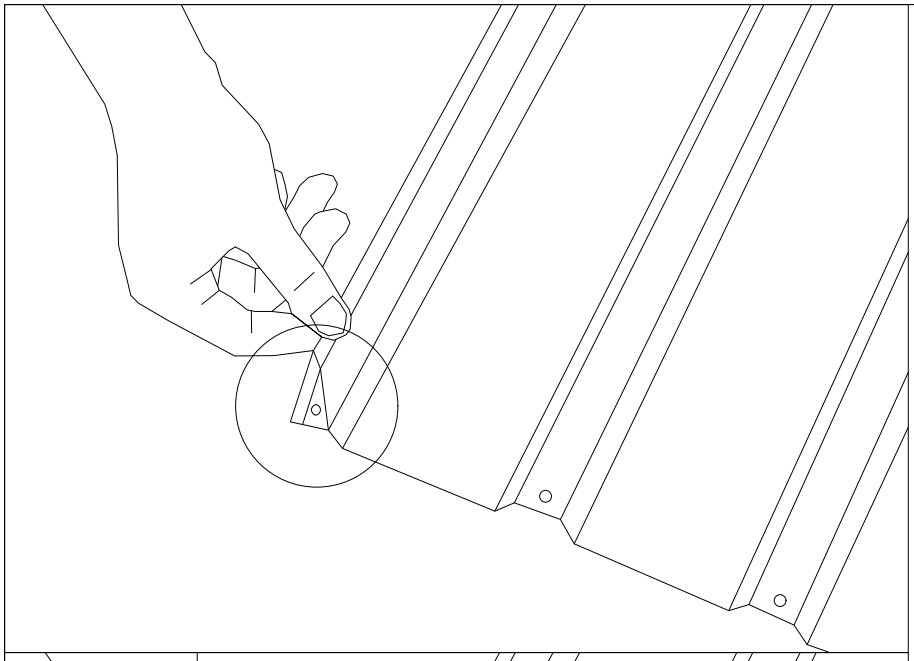

NOTICE If there is slight bending on the corners

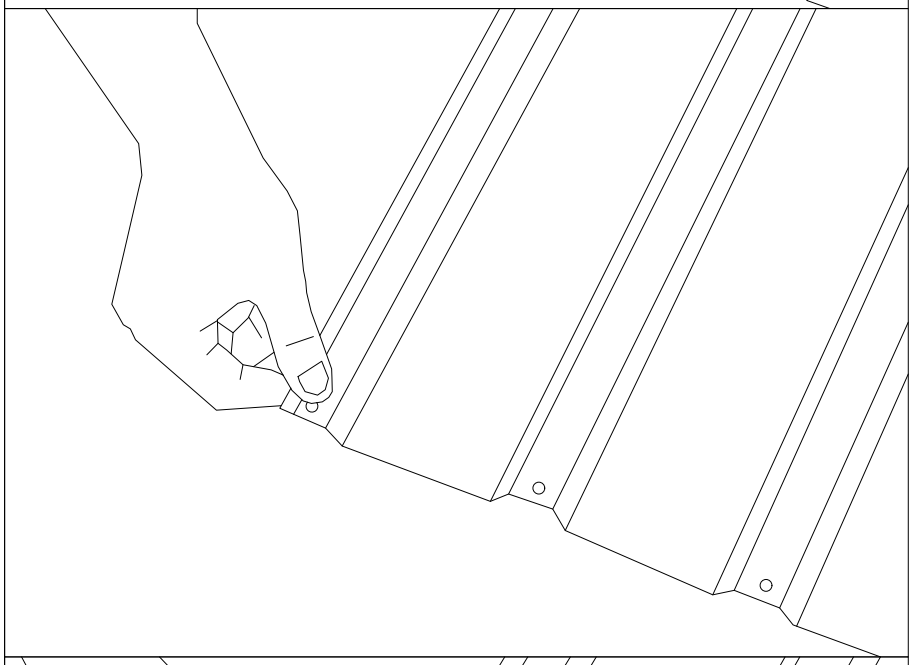

① Pls wear gloves and stretch the corners slightly until they are flat

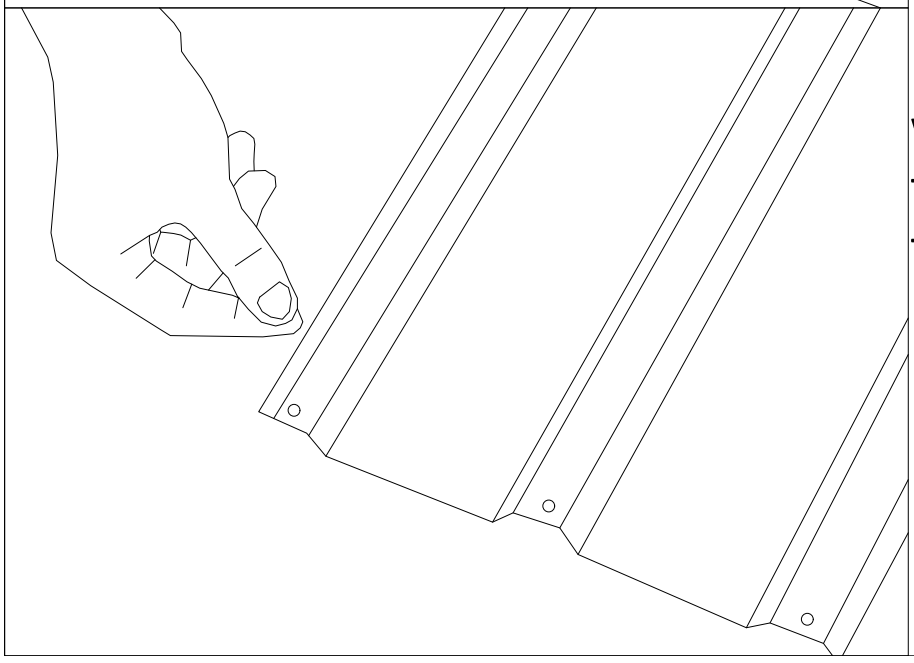

② Then the sheets will be normal and there is no effection to the assembling

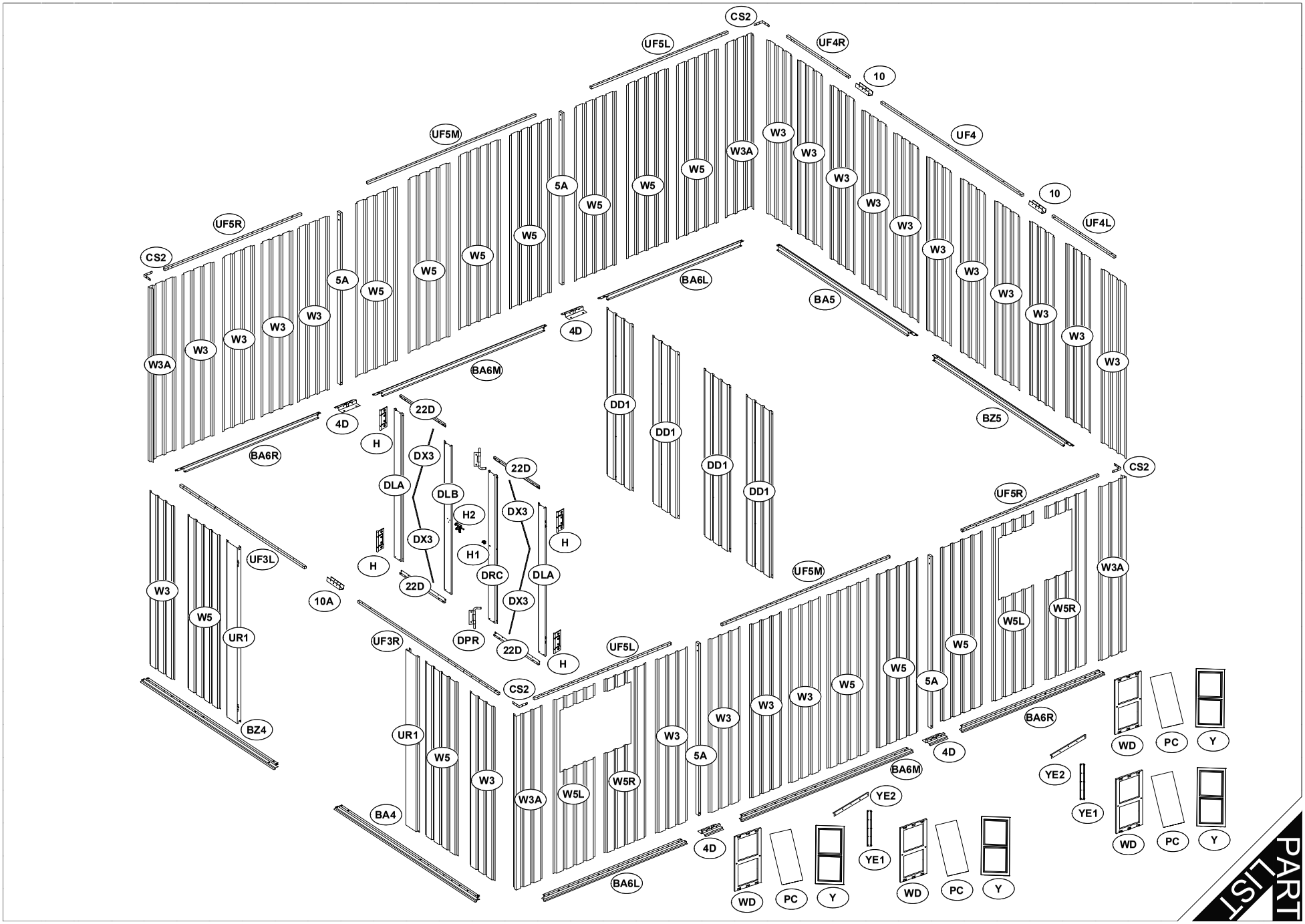
CS2
UF5L
UF4R
10
UF5M
UF4
W3A
W3
W5
5A
10
UF5R
UF4L
CS2
BA6L
BA5
4D
BA6M
22D
DD1
BZ5
4D
H
DX3
BA6R
CS2
22D
DLA
DLB
UF5R
H2
DX3
H
H1
UF3L
DRC
DLA
UF5M
W3A
W5R
W5L
10A
22D
DX3
UF3R
DPR
22D
UF5L
W5
UR1
H
CS2
BZ4
BA6R
UR1
W5
W3
5A
4D
BA6M
YE2
W3A
W5L
W5R
YE2
YE1
BA4
4D
BA6L
WD
PC
Y
WD
PC
Y
WD
PC
Y
PART LIST

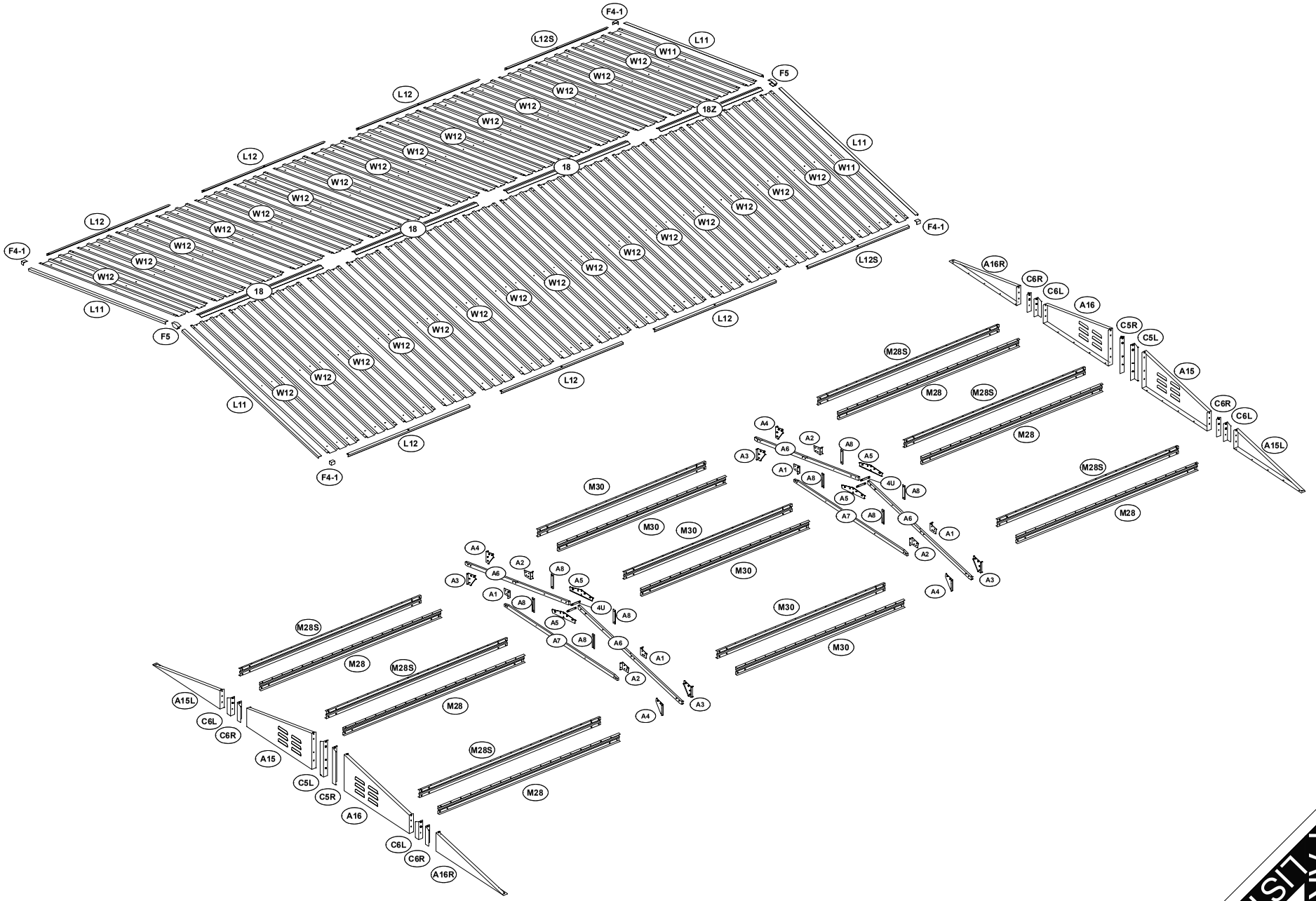
F4-1
L12S
L11
W11
W12
F5
L12
18Z
18
F4-1
L12S
L12
F5
L11
F4-1
A16R
C6R
C6L
A16
C5R
C5L
A15
C6R
C6L
A15L
M28S
M28
M30
A1
A2
A3
A4
A5
A6
A7
A8
4U
A15L
C6L
C6R
A15
C5L
C5R
A16
C6L
C6R
A16R

PART LIST

NR.	PART.	MM.	QTY.
UNDER			
BZ4		1808	1
BA4		1914	1
BZ5		1861	1
BA5		1861	1
BA6L		1517	2
BA6R		1517	2
BA6M		1821	2
4D	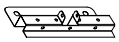	188*112	4
MIDDLE			
UF3L		1686	1
UF3R		1898	1
UF4		1908	1
UF4L		838	1
UF4R		838	1
UF5L		1449	2
UF5R		1449	2
UF5M		1780	2
10		100	2
10A		100	1
C2S		90*90	4
UR1		1690*163*37	2
YE1		596.5	2
YE2		868	2
5A		1672*40*20	4
W3		1690	21
W3A		1690	4

NR.	PART.	MM.	QTY.
W5	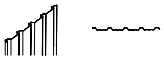	1690	12
W5L	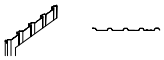	1690	2
W5R	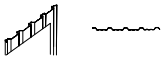	1690	2
WD			4
PC			4
Y			4
TOP1			
A1		107*86*31	4
A2		107*86*31	4
A3		155*124*20	4
A4		155*124*20	4
A5		334*72*8	4
A6		1817.5*40*20	4
A7		1940*40*20	2
A8		170	8
A15L		913*179	2
A16R		913*179	2
A15		879*350	2
A16		879*350	2
C5L		347	2
C5R		347	2
C6L		176	4
C6R		176	4
M28		1494	6
M28S		1494	6
M30		1780	6
4U		86*23	4

NR.	PART.	MM.	QTY.
TOP2			
W11		1884	2
W12		1884	30
L11		1884	4
L12		1290	6
L12S		1078	2
18	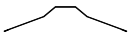	1292	3
18Z		1080	1
DOOR			
DLA		1680*115*14	2
DLB		1680*115*14	1
DRC		1680*115*14	1
DX3		1054	4
22D		846	4
DD1		1680	4
ANNEX			
H			4
H1			1
H2			1
DPL			1
DPR			1
F4-1			4
F5			2
F7			730
F8			240
S4			860
S6			260

NR.	PART.	MM.	QTY.
S7			260
S8			15
S9			4
S10			8
M8*40			45
M6			1
M8			1

BZ4		1
BA4		1
BA5		1
BZ5		1
S4		6

1

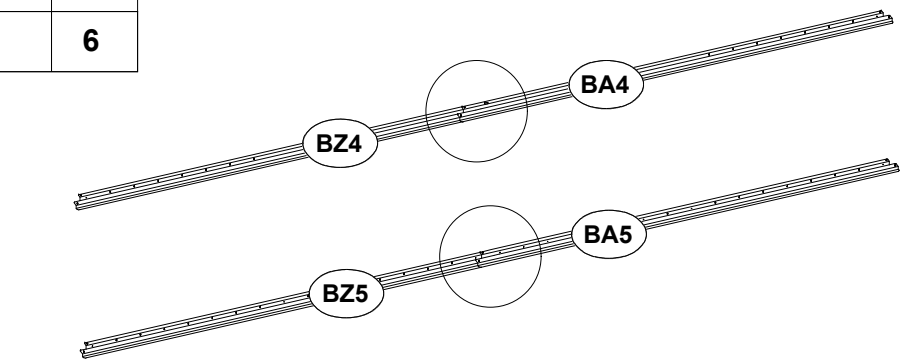

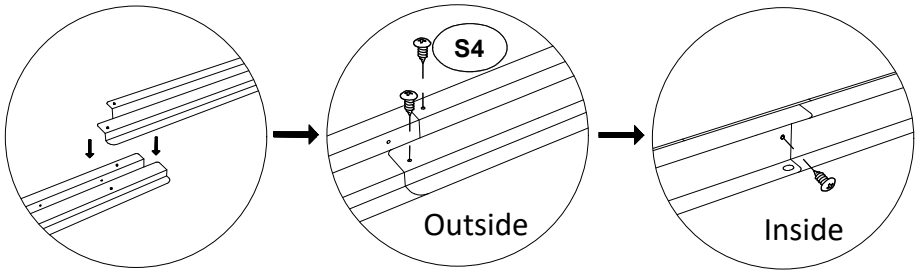

BA6L		2	4D		4
BA6R		2	S4		20
BA6M		2			

2

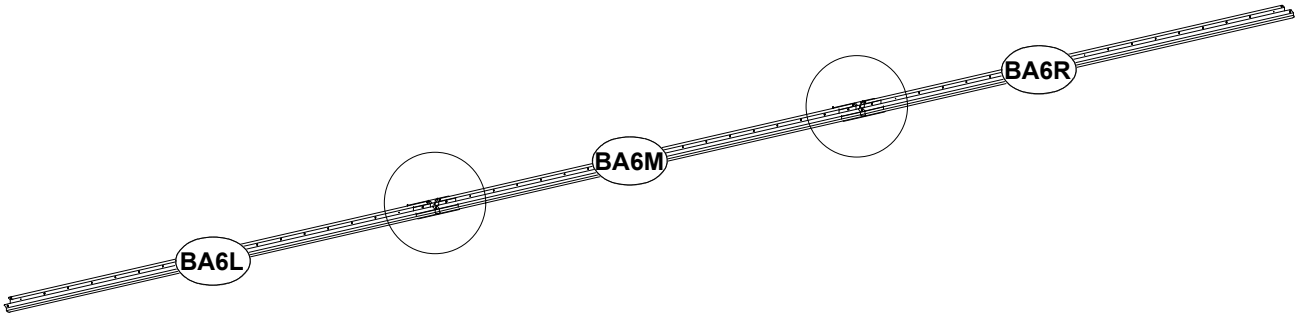

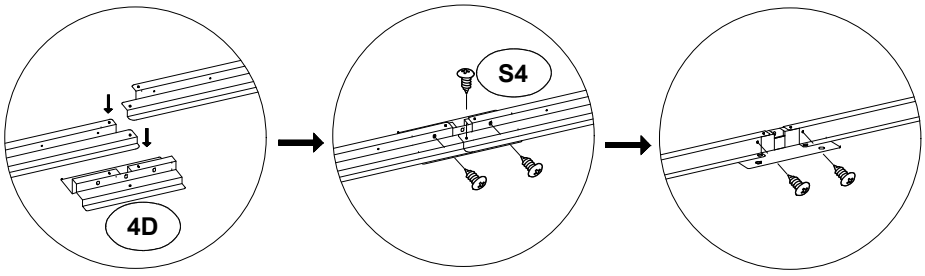

x2

S4		8

3

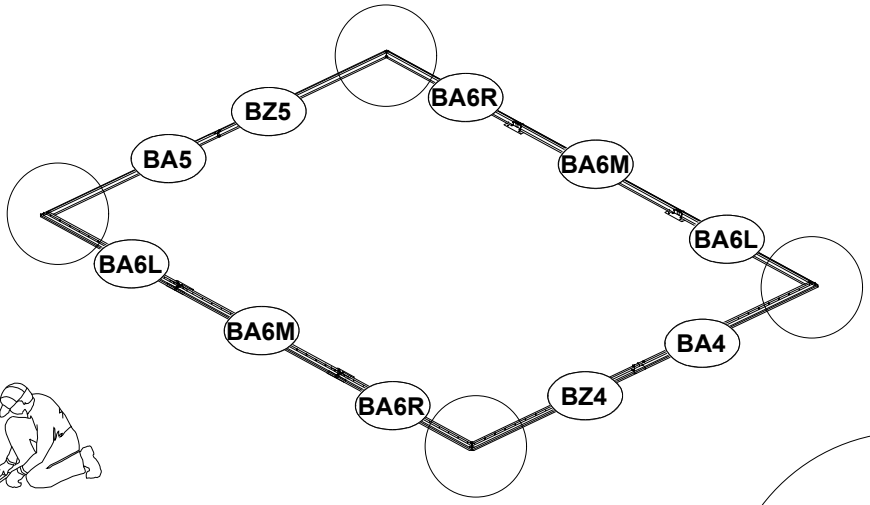

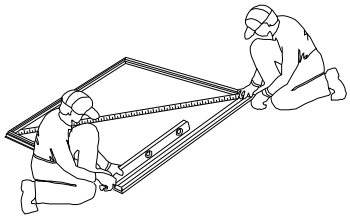

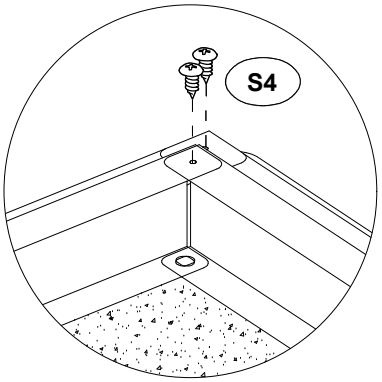

1、Note: When diagonal measurements are equal,the frame is square.

2、Note: The Floor Frame must be BOTH square AND level or the holes will not line up properly.

A1		4
A2		4
A6		4
A7	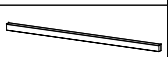	2
A8		8
M8*40		16
S4		16

4

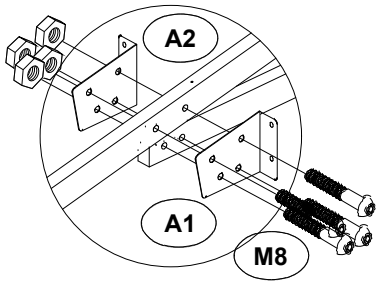

x2

A5		4
M8*40		8

5

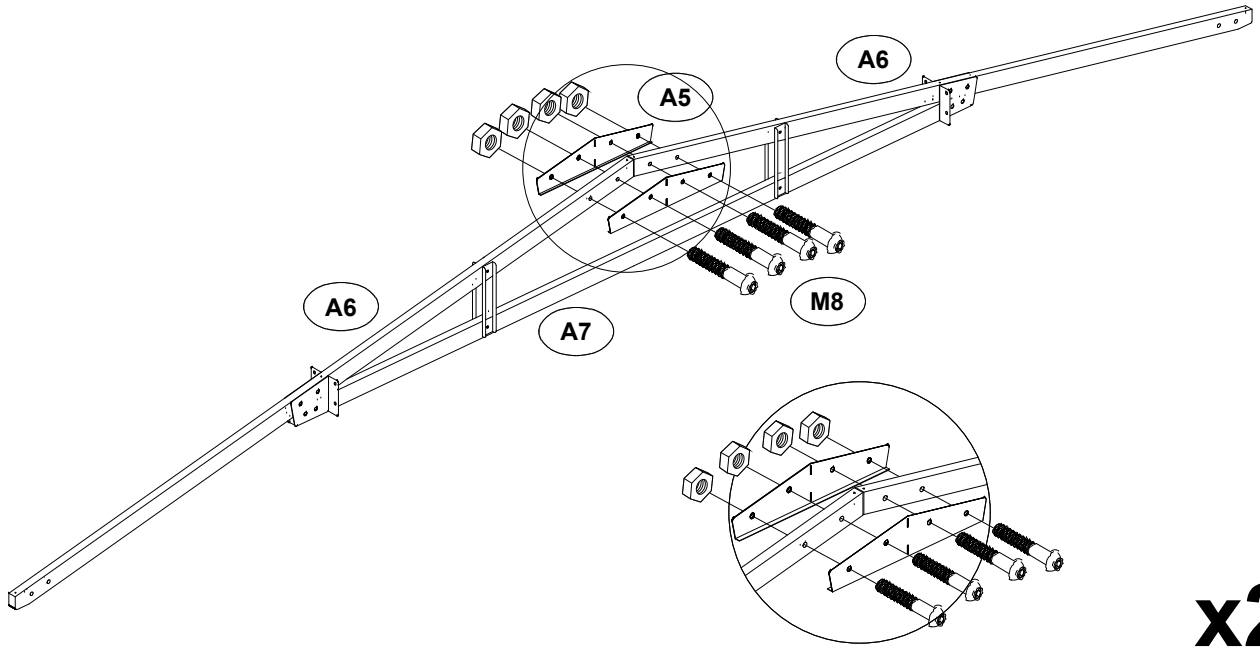

x2

A3		4	M8*40		16
A4		4			
5A		4			

6

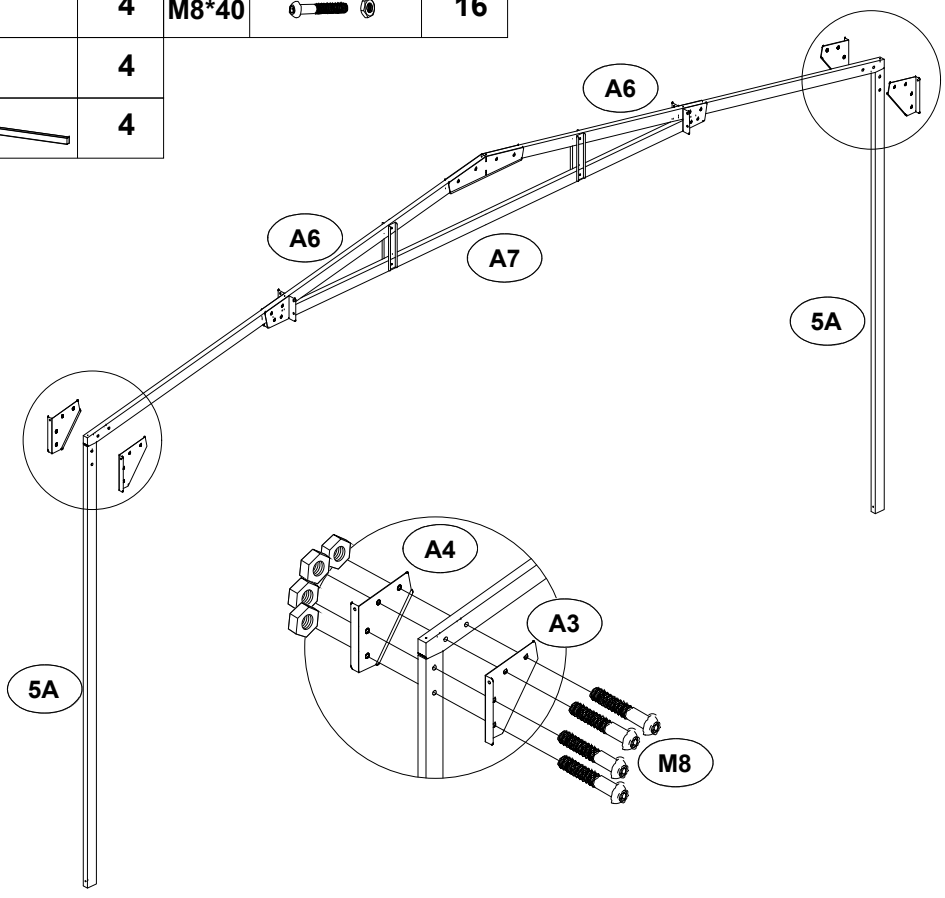

x2

S10		4

7

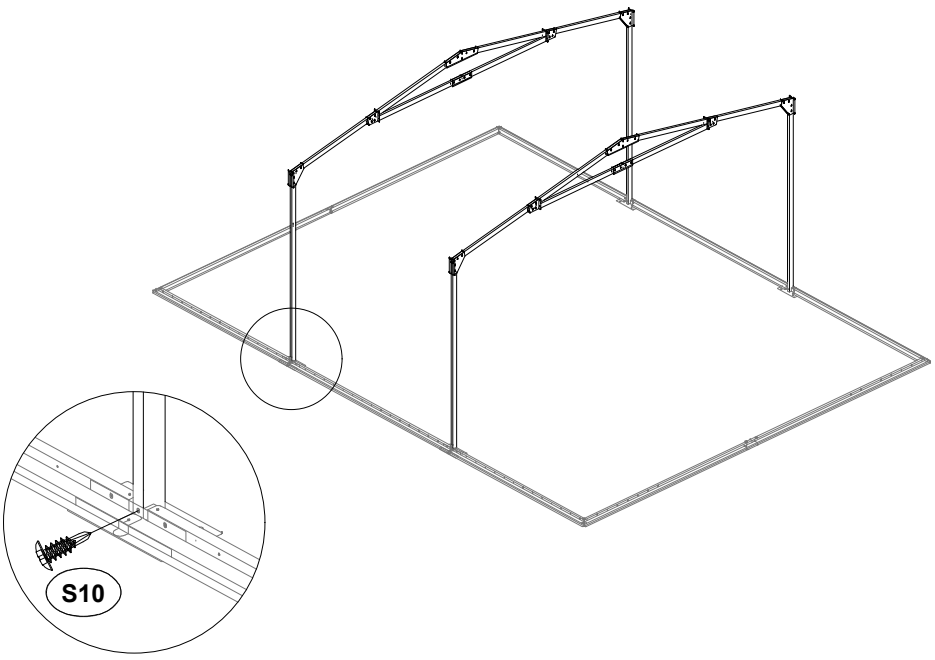

UF5M	□	2
S4		4

8

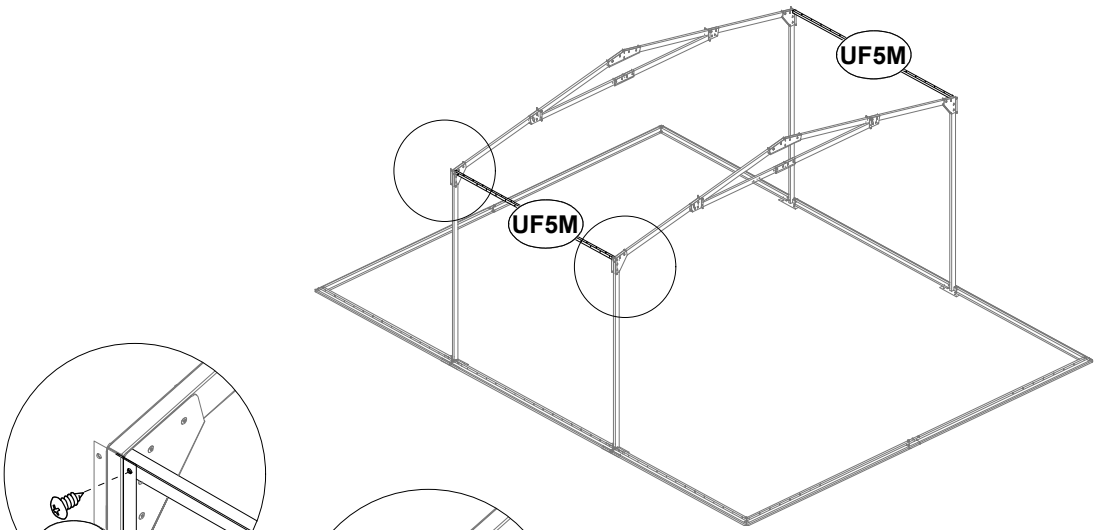

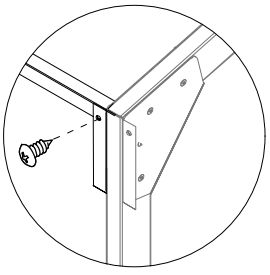

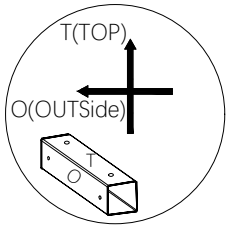



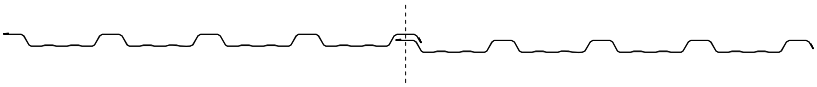

Note: Wall panel are prone to overlapping, so please carefully inspect them before installation to avoid using overlapping wall panel

9

W3A		**4**	**S6**		**4**
W3		**4**	**S7**		**4**
S4		**20**			
F7		**24**			

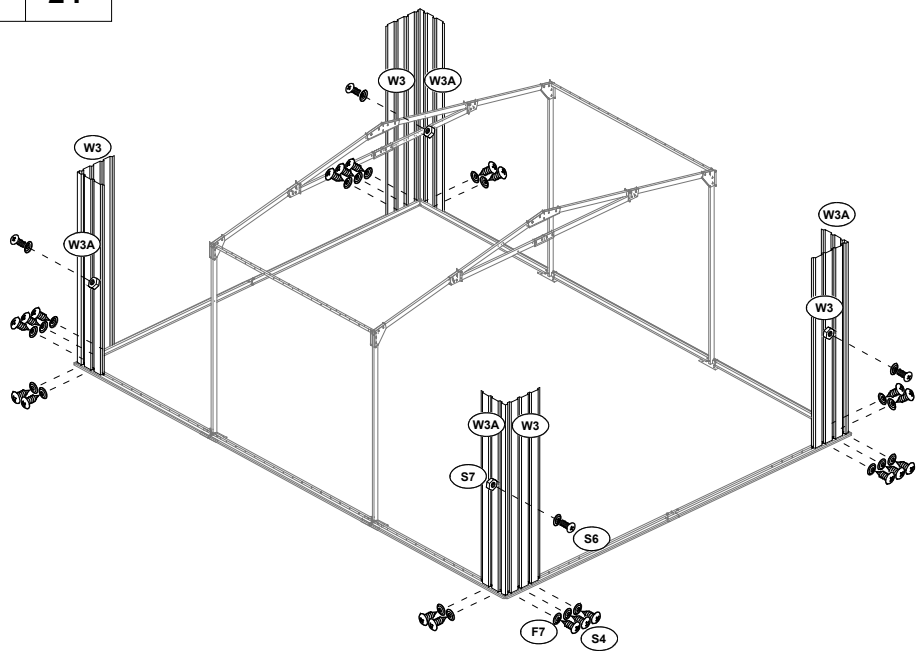

10

UF3L	☐	1	10		2
UF3R	☐	1	10A		1
UF4L	☐	1	S4		12
UF4	☐	1			
UF4R	☐	1			

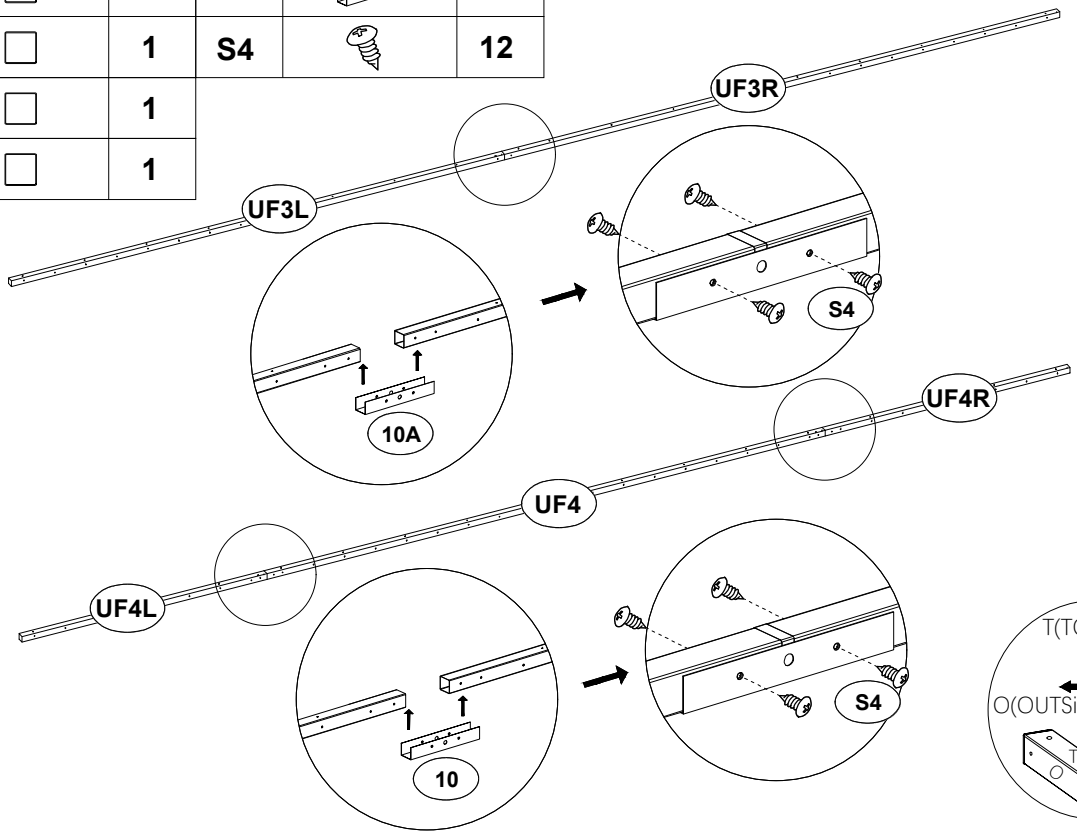

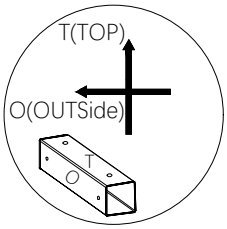

11

UF5L	☐	2	S4		36
UF5R	☐	2	F7		20
C2S		4			

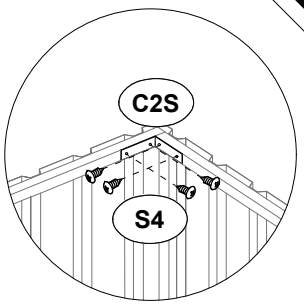

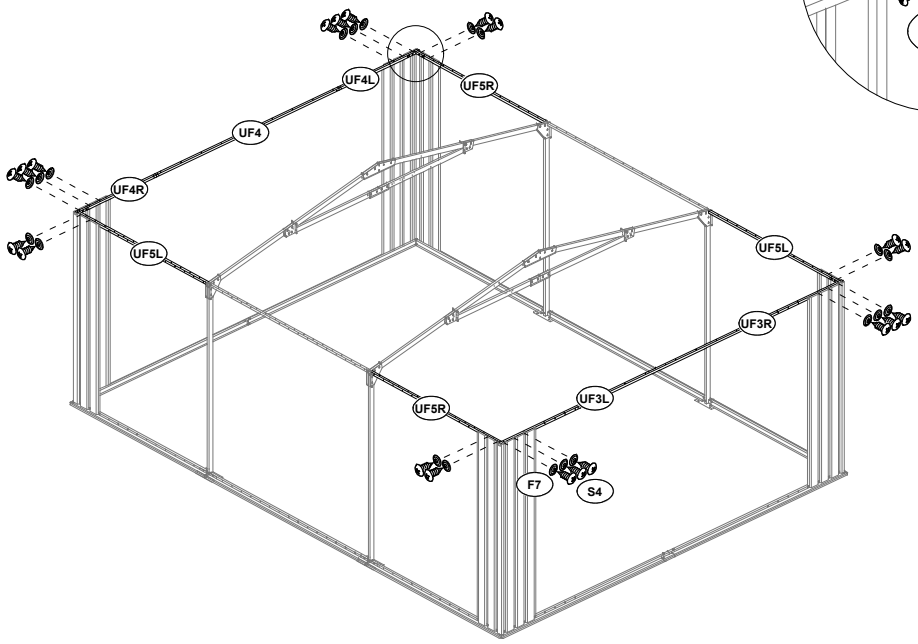

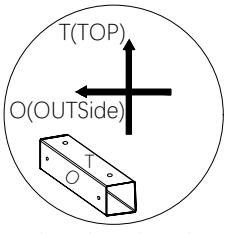

12

W5	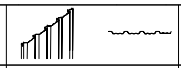	5	S6		5
S4		40	S7		5
F7		45			

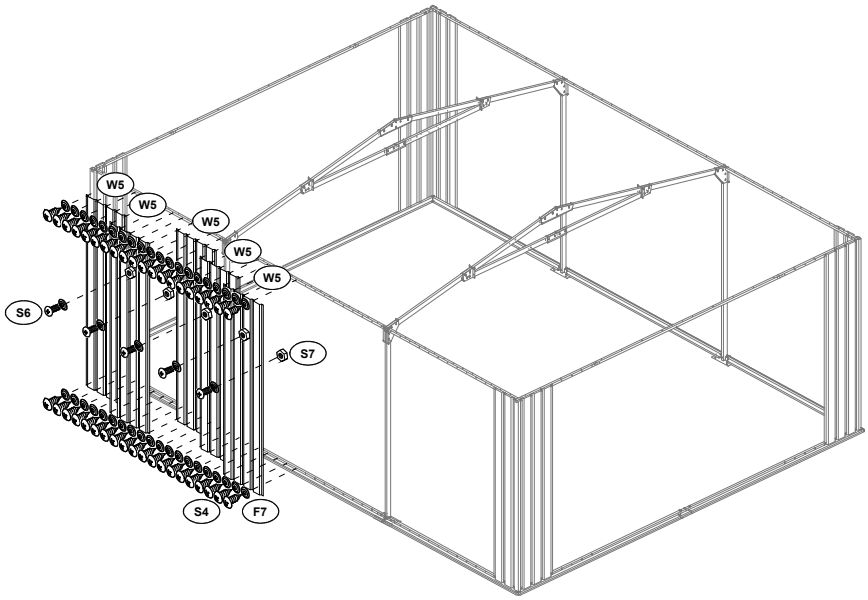

13

W5		2	S6		7
W3		4	S7		7
S4		42			
F7		49			

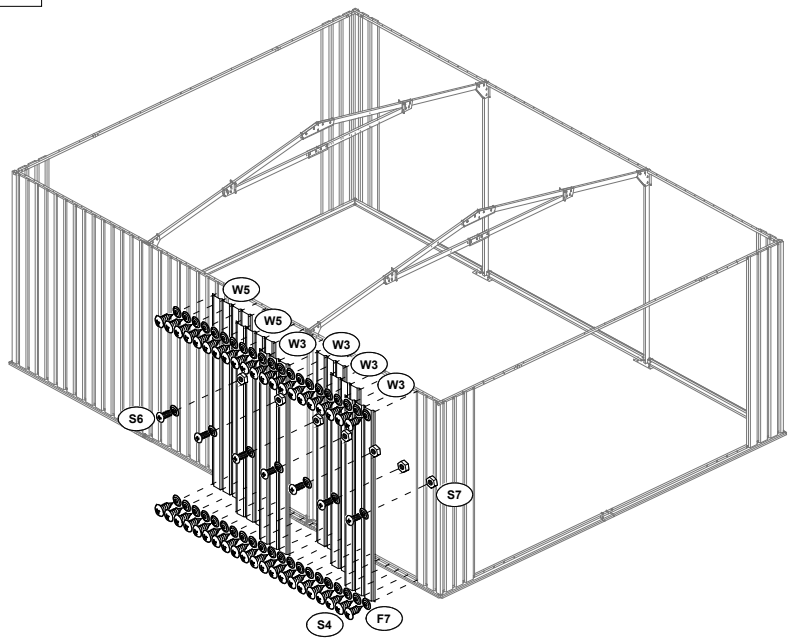

14

W5		2	S6		2
S4		16	S7		2
F7		18			

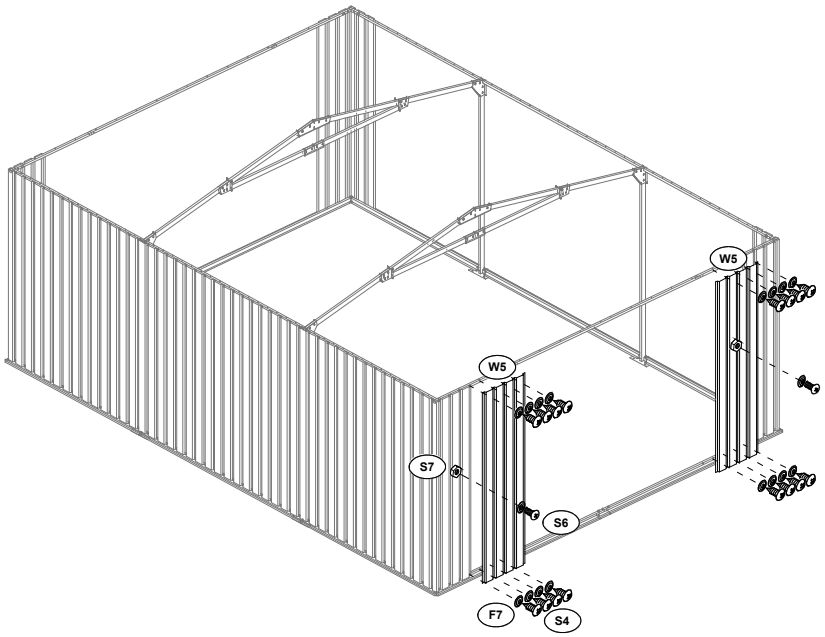

15

W3		3	S4		34
W5L		1	F7		39
W5R		1	S6		5
YE2		1	S7		5

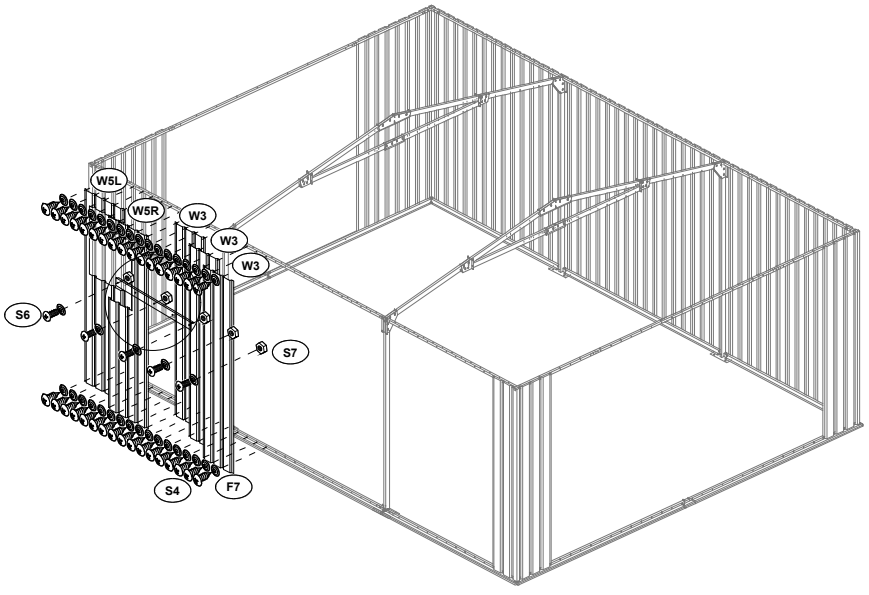

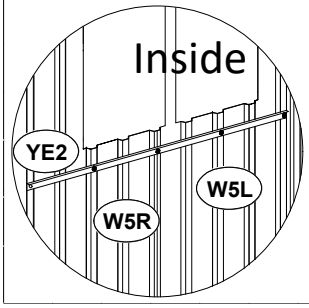

16

W3		1	S4		48
W5		3	F7		55
W5L		1	S6		7
W5R		1	S7		7
YE2		1			

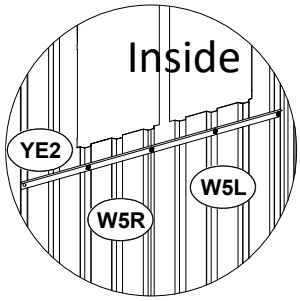

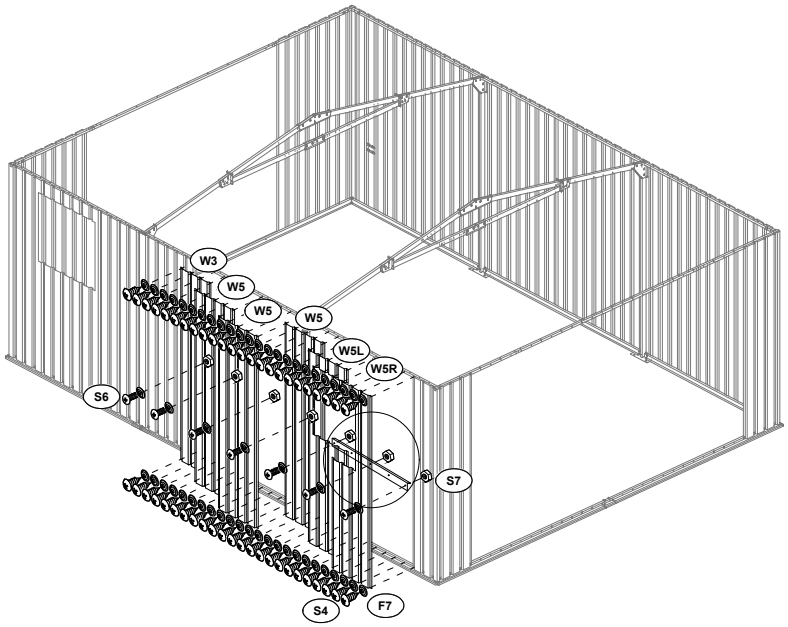

17

W3		9	S6		10
S4		56	S7		10
F7		66			

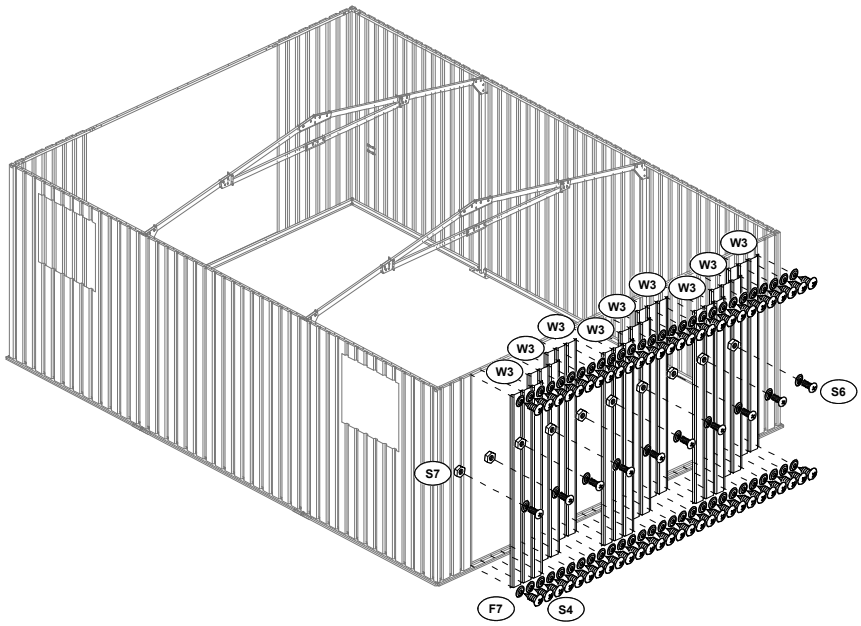

UR1		2	S6		2
S4		8	S7		2
F7		6			

18

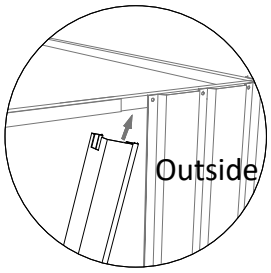

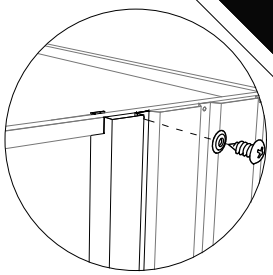

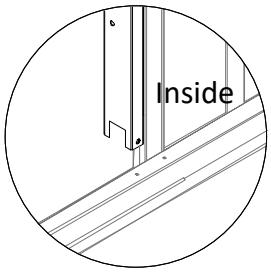

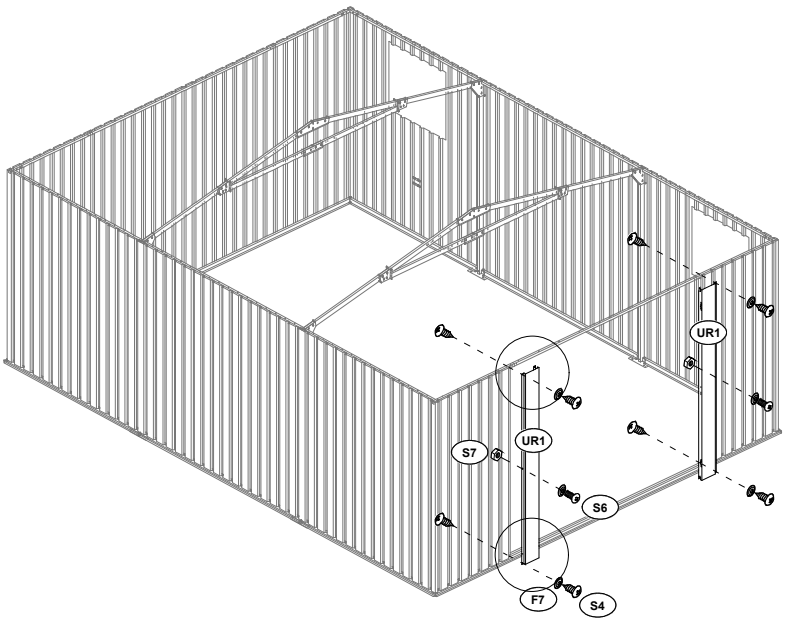

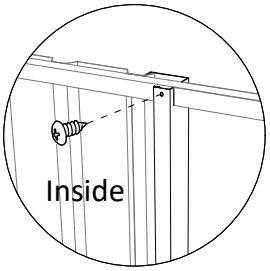

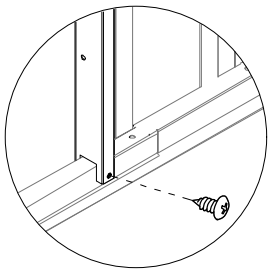

WD		4
PC		4

19

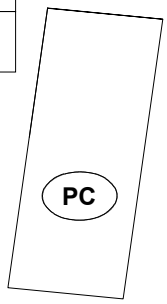

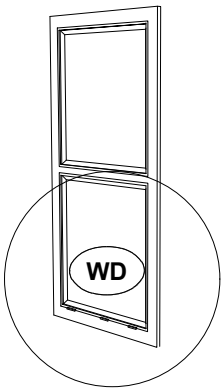

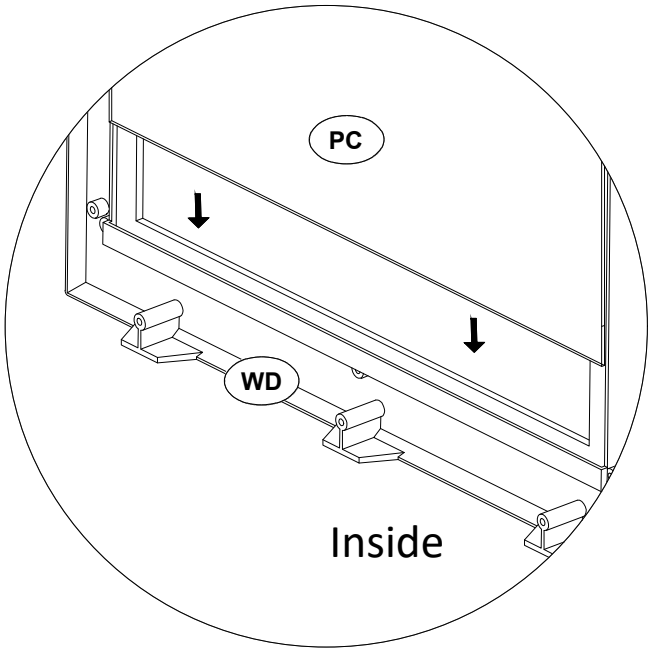

Up

Down

The milky white film faces outward and tears off the films on both sides

x4

Y		4	S4		76
YE1		2	F7		8

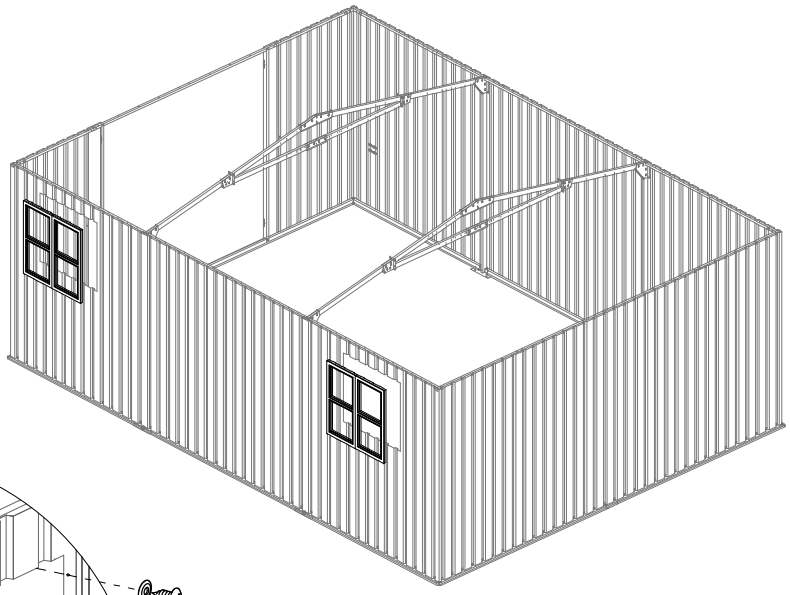

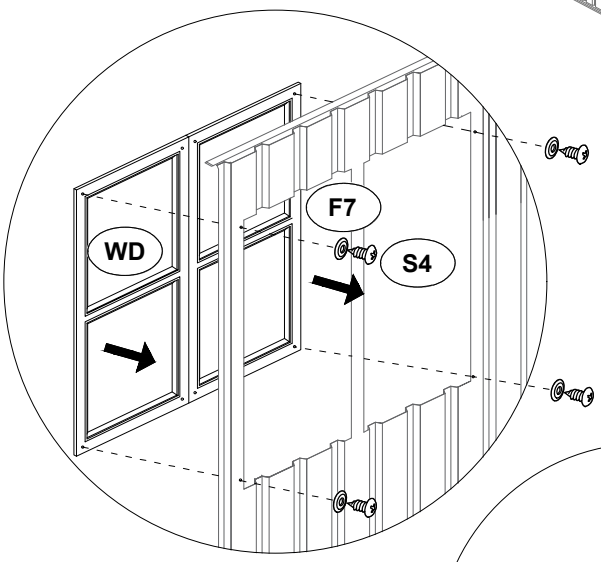

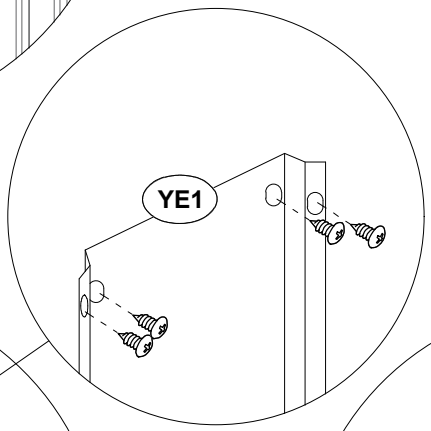

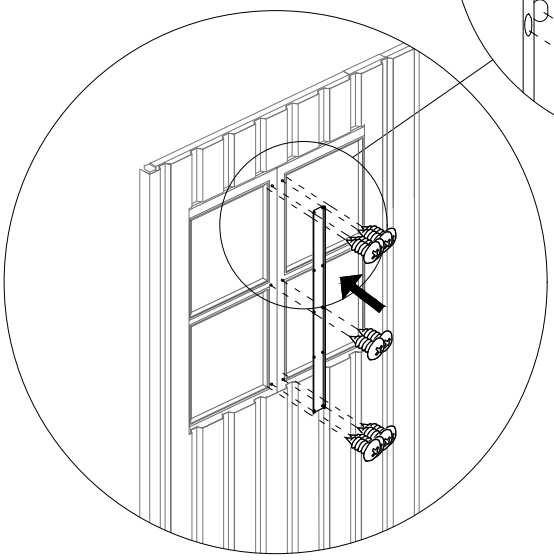

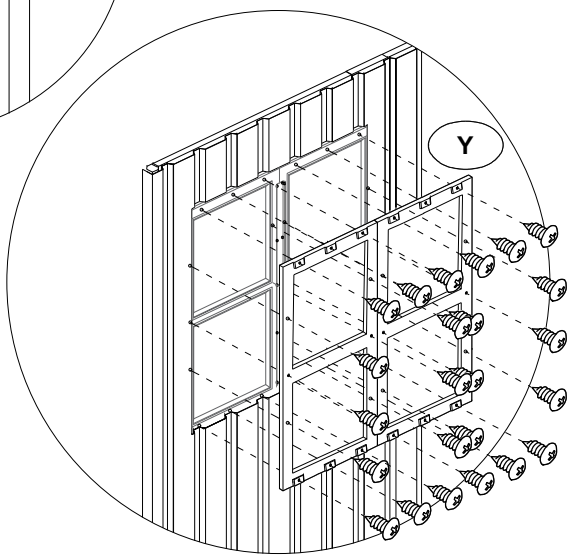

A15L		2	C5L		2	S6		8
A16R		2	C5R		2	S7		8
A15		2	C6L		4			
A16		2	C6R		4			

21

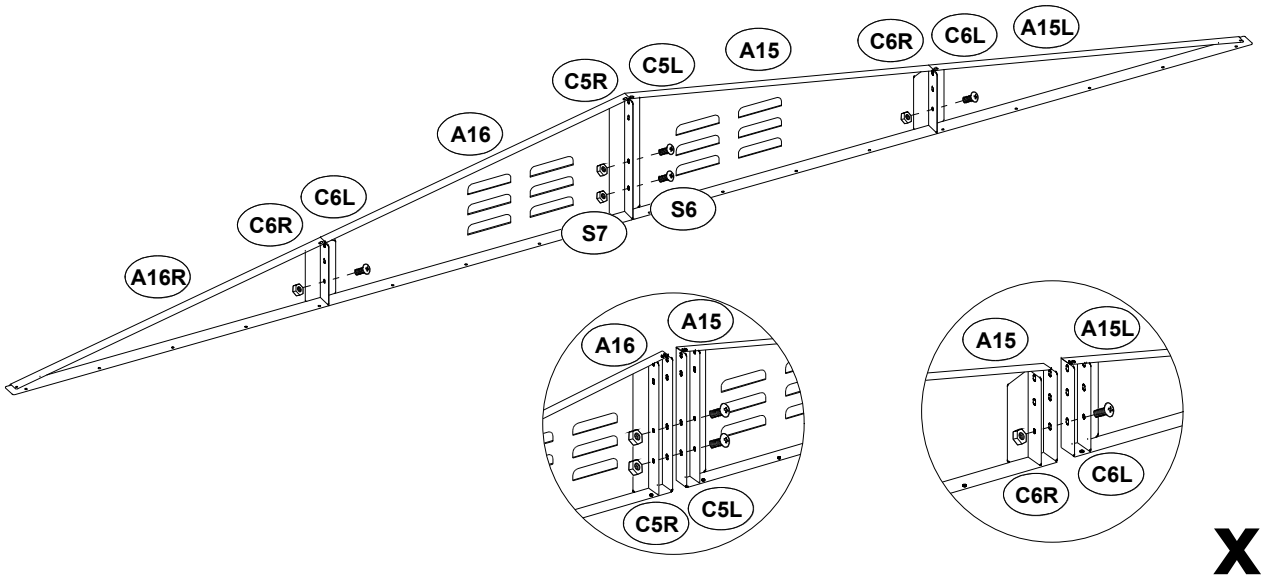

x2

S4		36

22

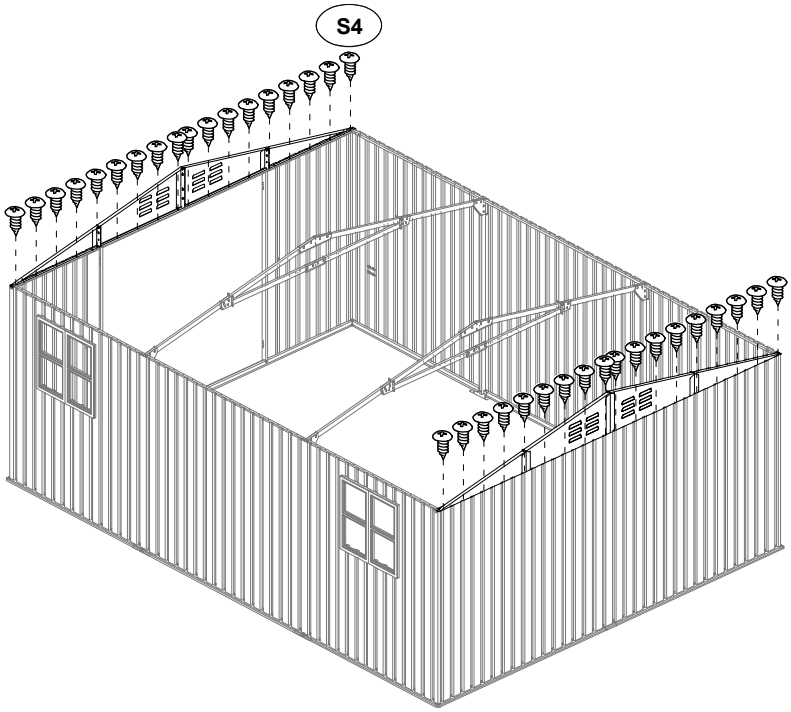

M28		6	S6		72
M28S		6	S7		72
M30		6			

23

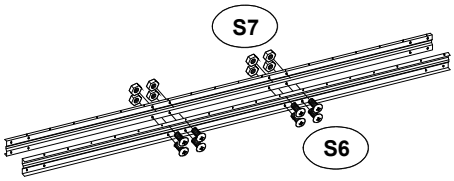

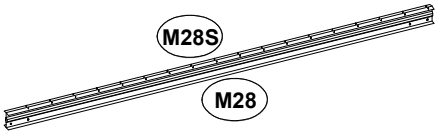

x6

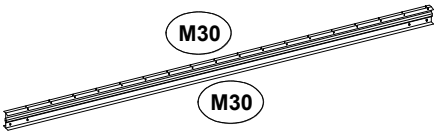

x3

S6		24
S7		24
4U		2

24

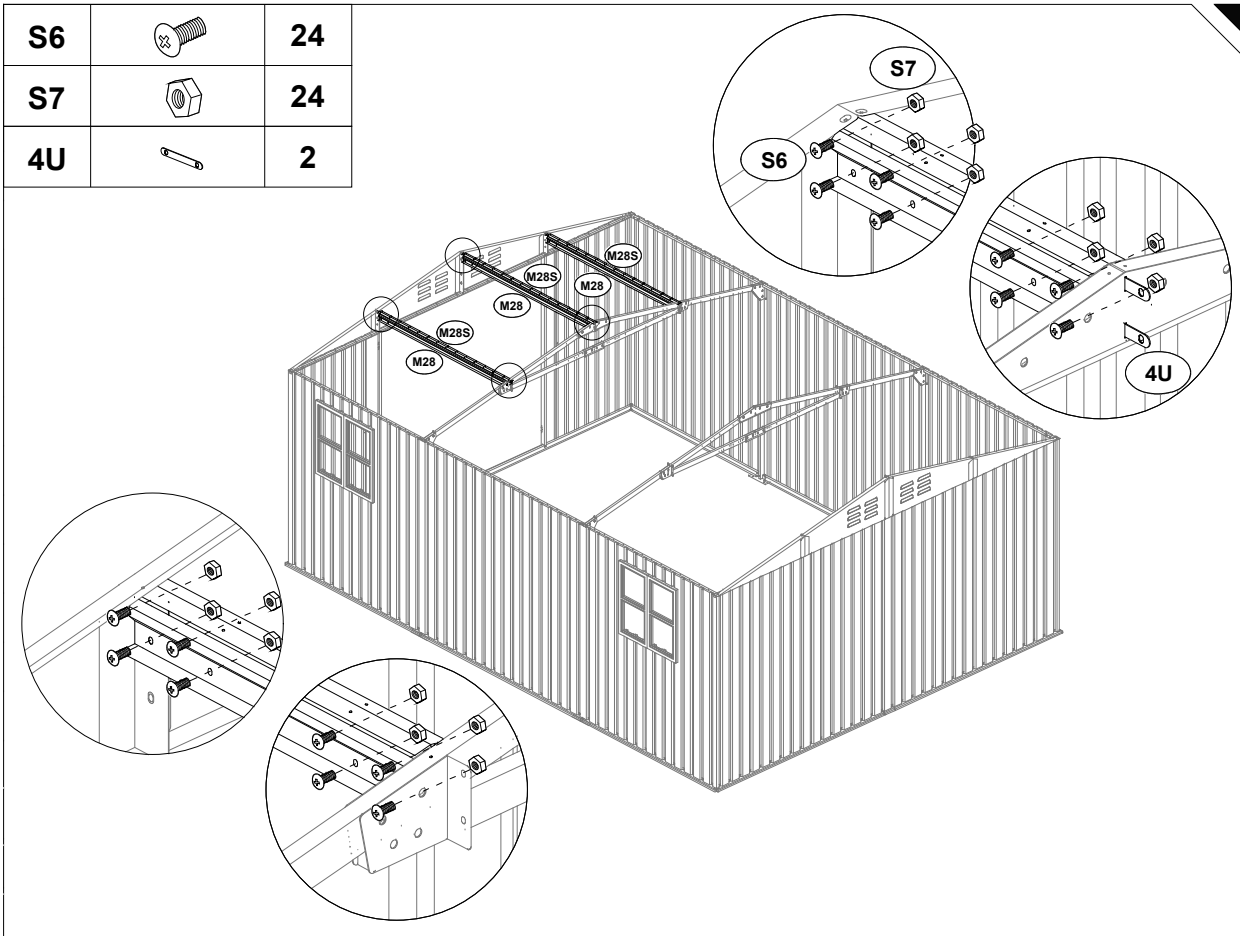

S6		48
S7		48
4U		2

25

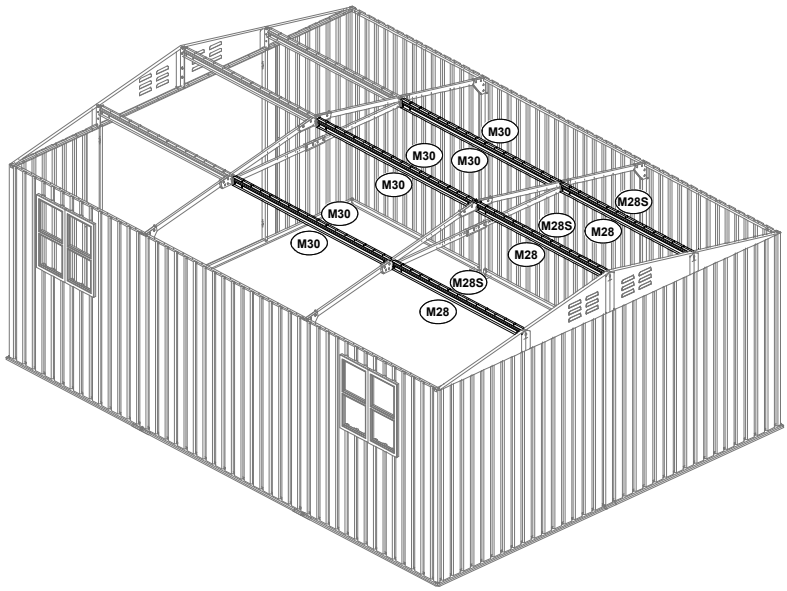

W12	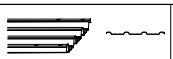	10
S4		90
F7		92
S8		2

26

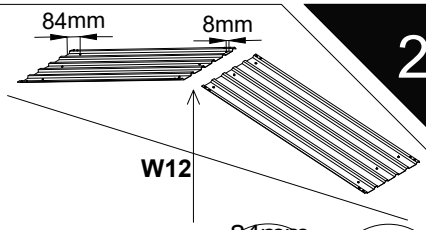

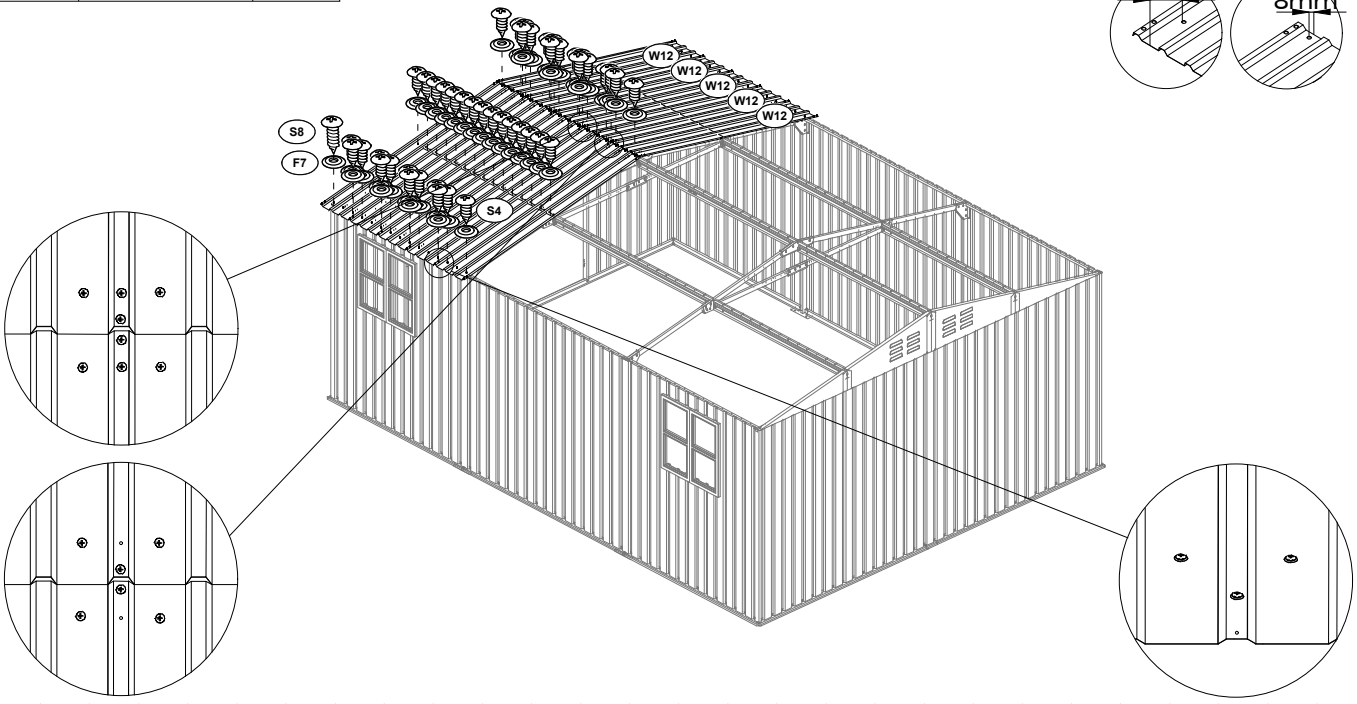

18	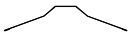	2
S4		3
F7		3

27

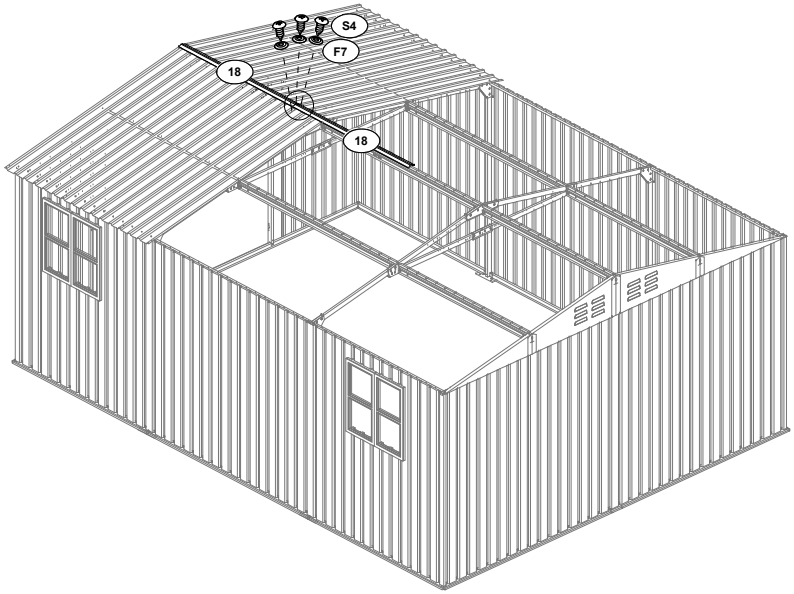

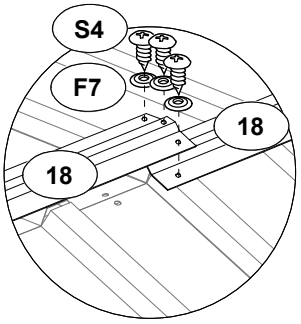

W12	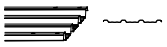	8
S4		78
F7		78

28

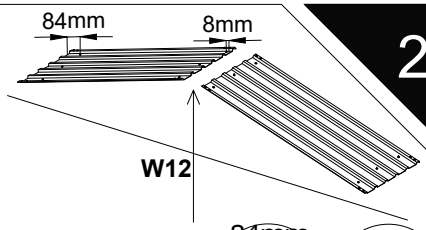

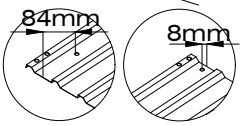

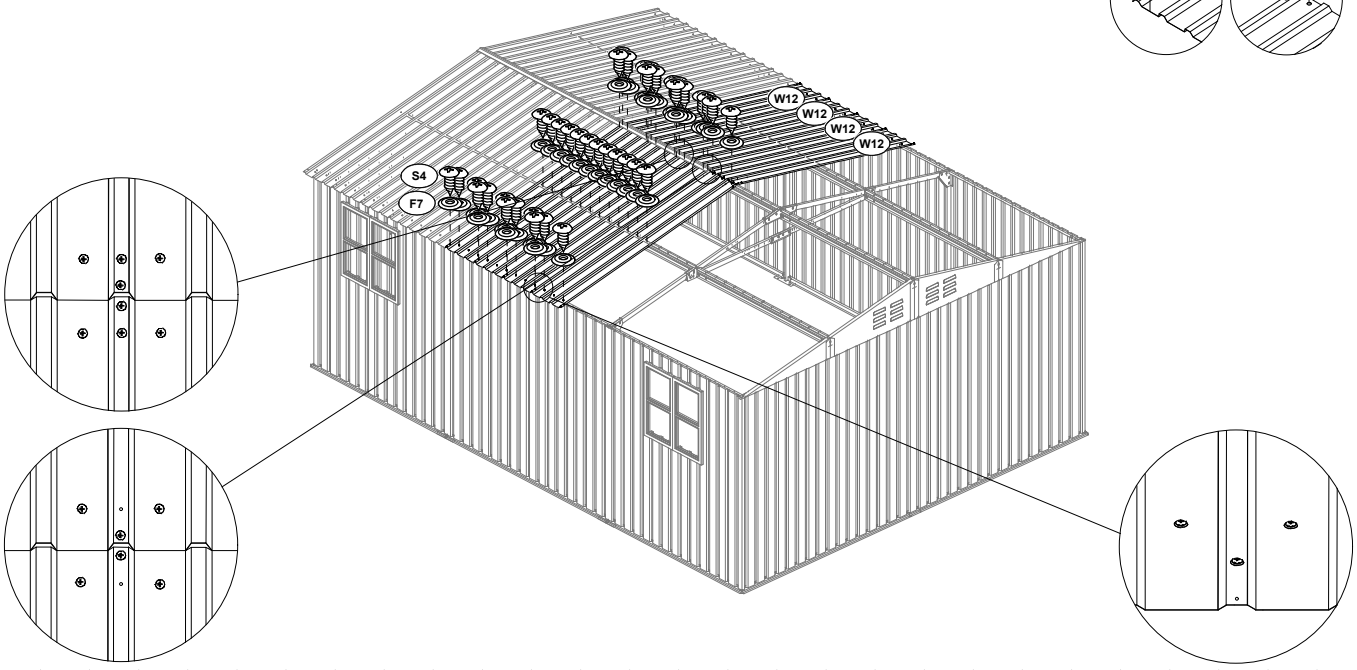

18		1
S4		3
F7		3

29

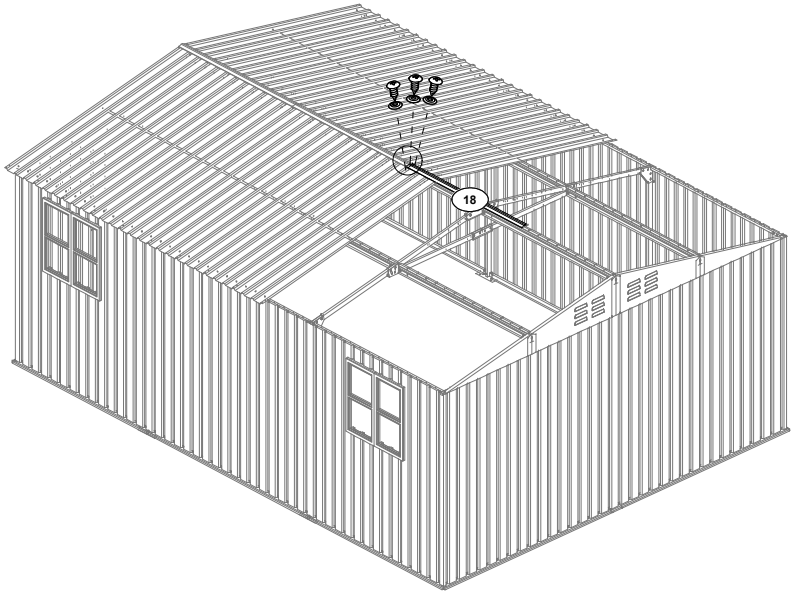

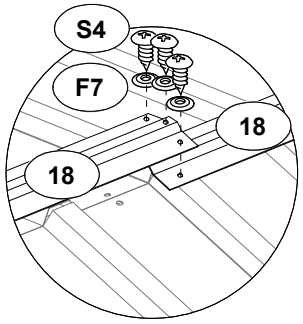

W12		8
S4		78
F7		78

30

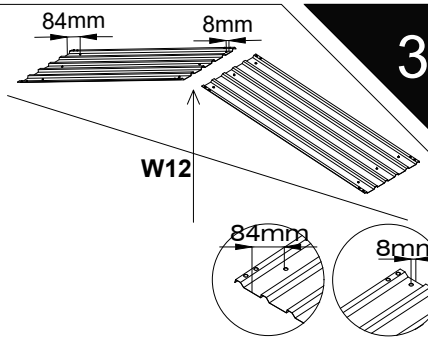

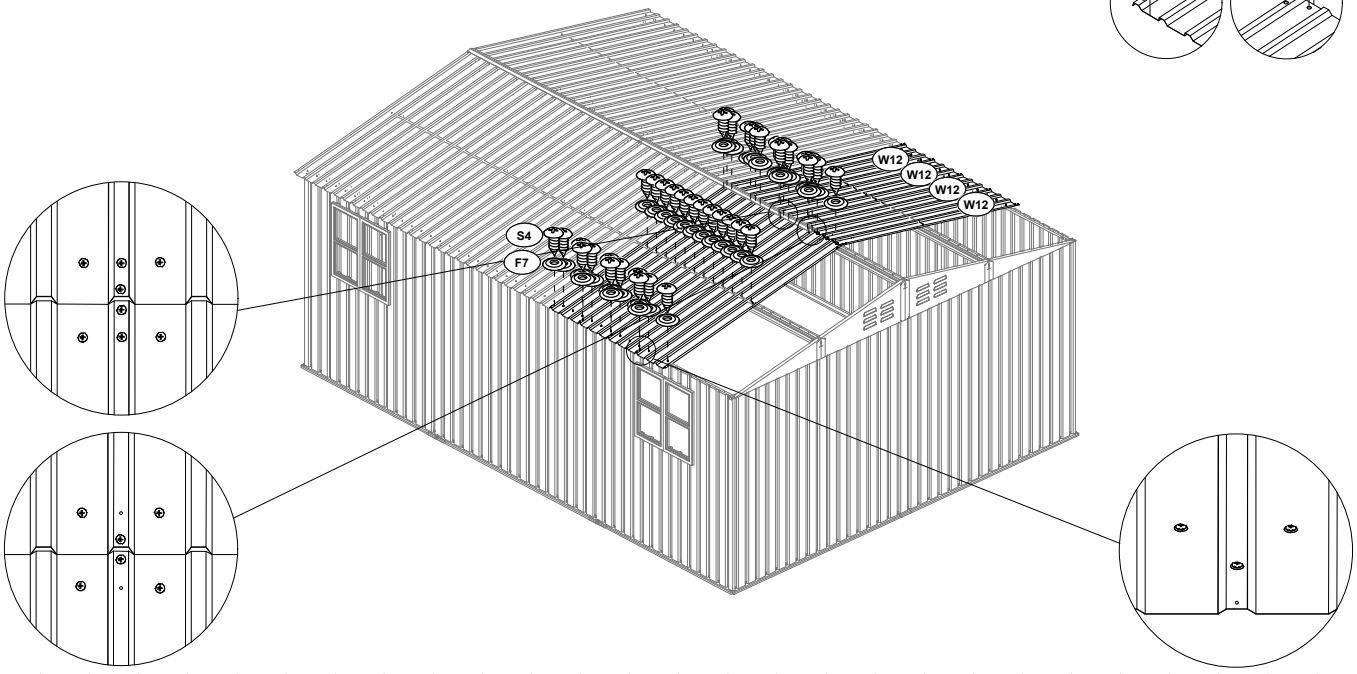

18Z		1
S4		3
F7		3

31

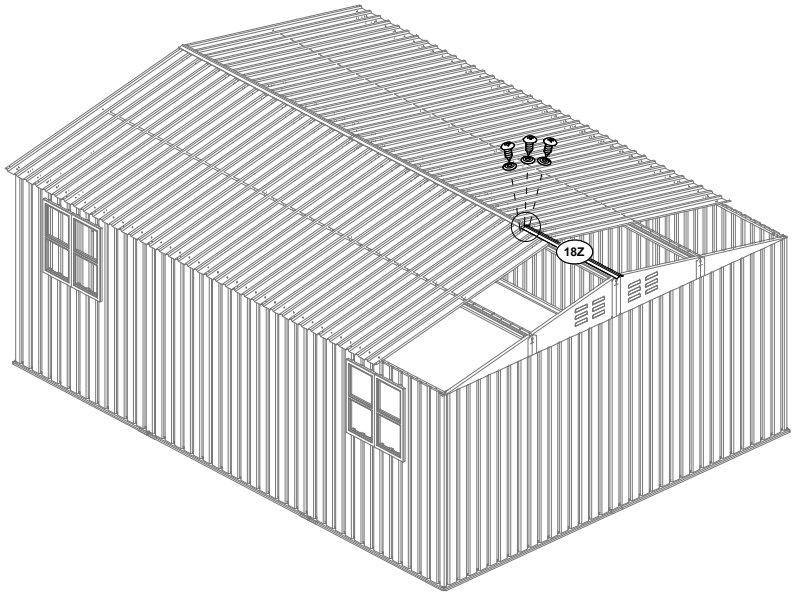

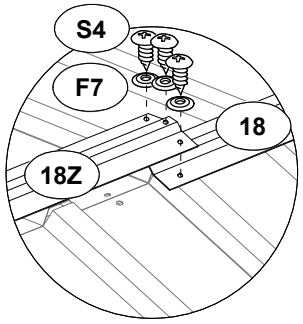

W11		2
W12		4
S4		50
F7		52
S8		2

32

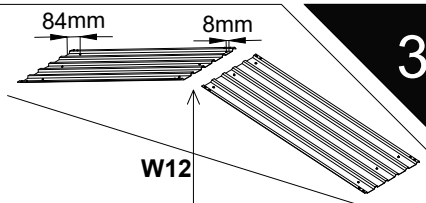

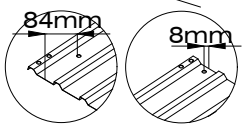

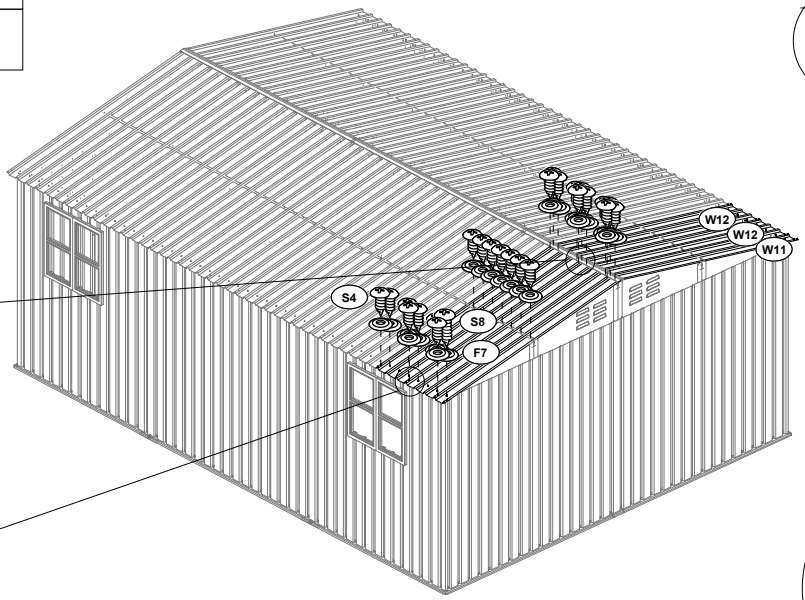

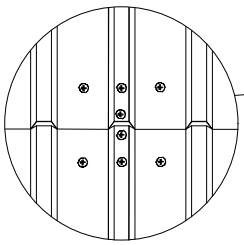

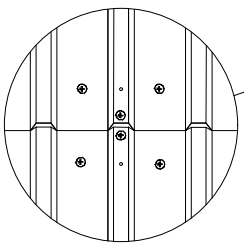

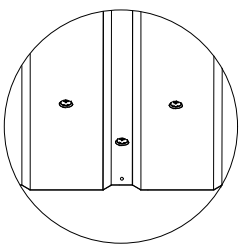

33

L11		4	S4		12
F5		2	F7		14
S8		2			

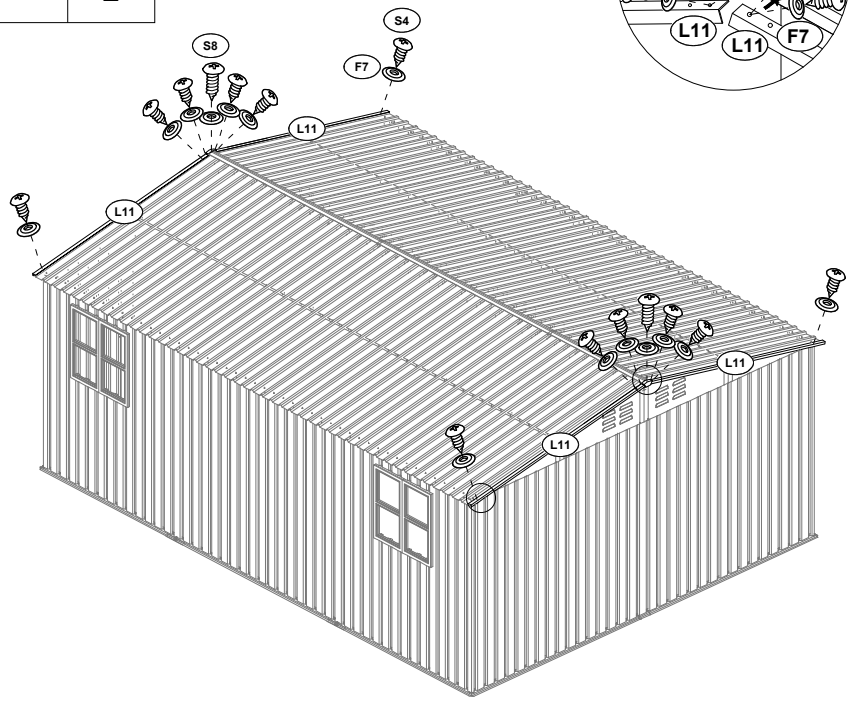

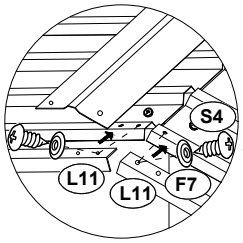

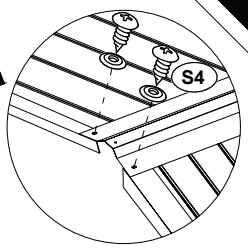

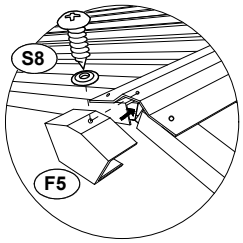

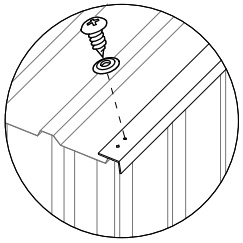

34

L12		3	S4		7
L12S		1	F7		9
F4-1		2	S8		2

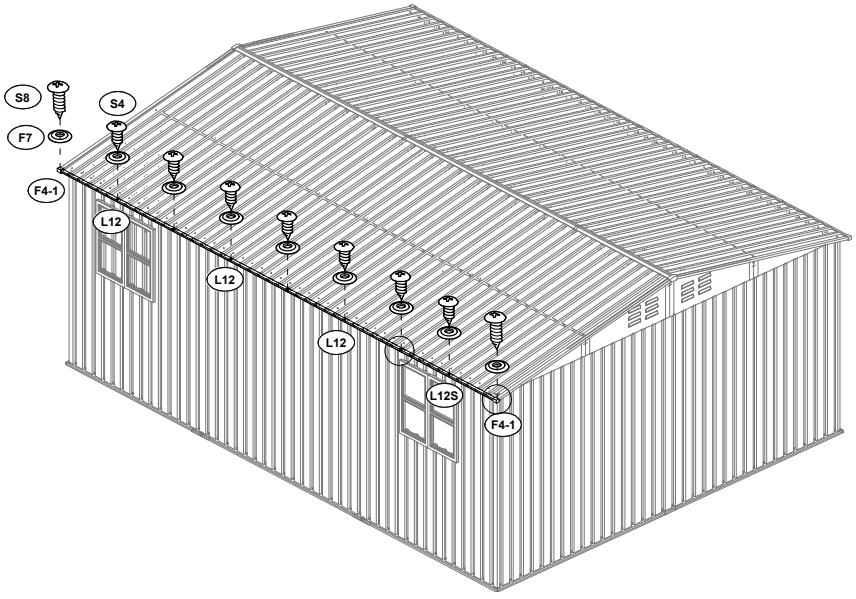

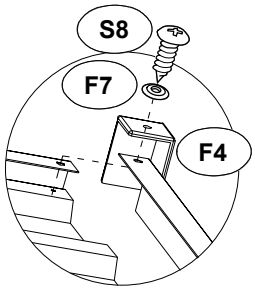

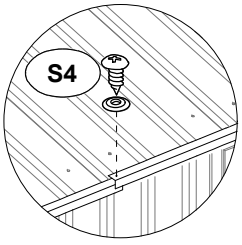

L12		3	S4		7
L12S		1	F7		9
F4-1		2	S8		2

35

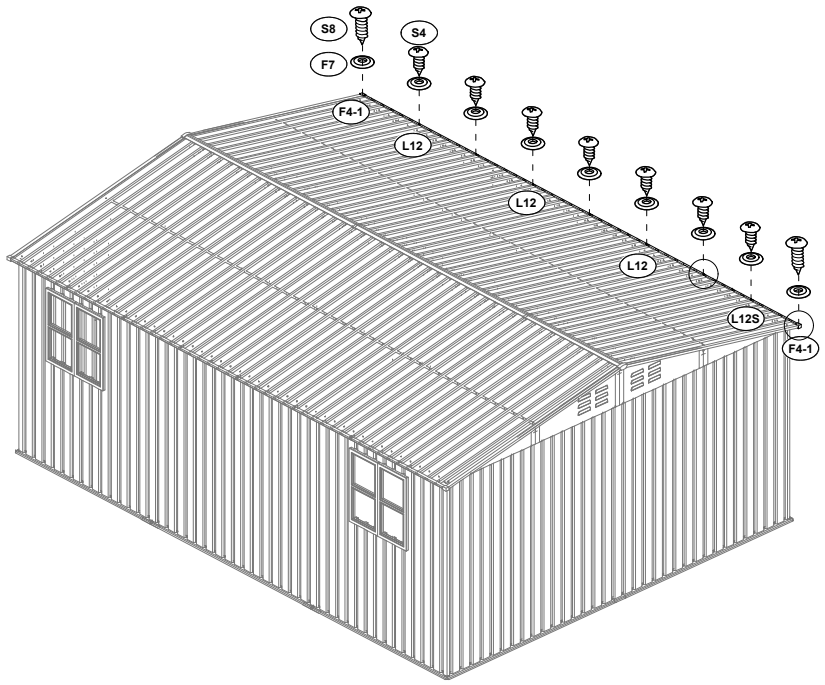

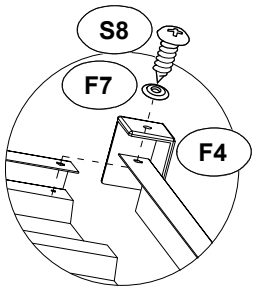

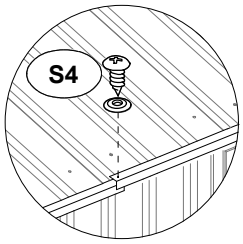

F8		228

36

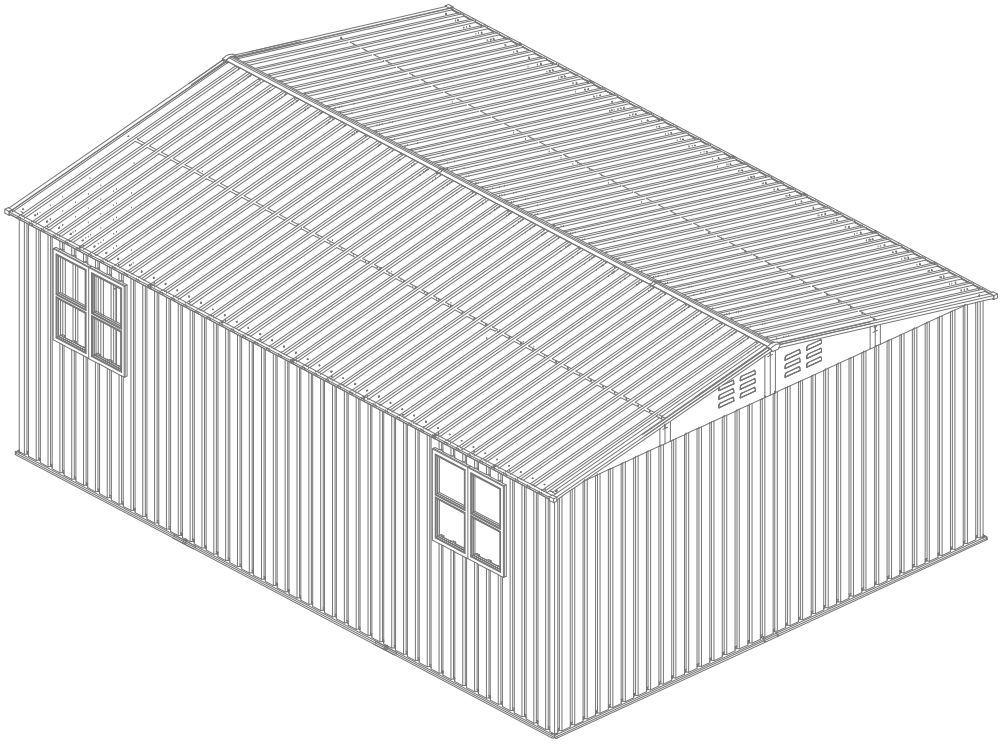

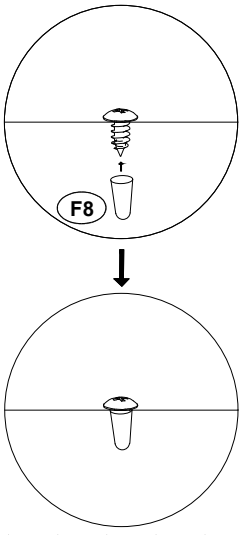

DLA		1
DLB		1
DX3		2
22D		2
H	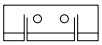	2
H2		1
F7		20
S6		16
S7		16
S4		12
DD1		2

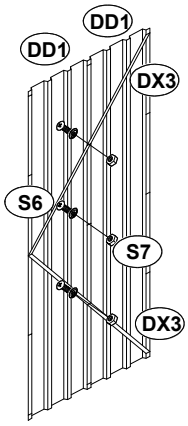

Inside

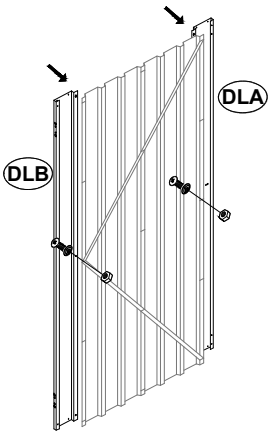

Inside

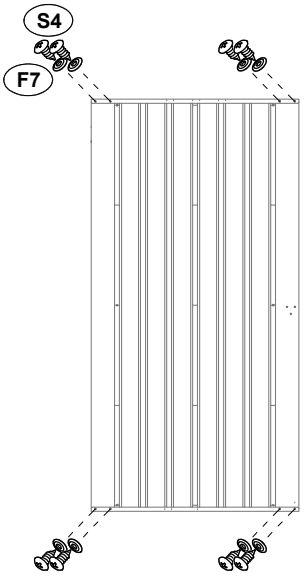

Outside

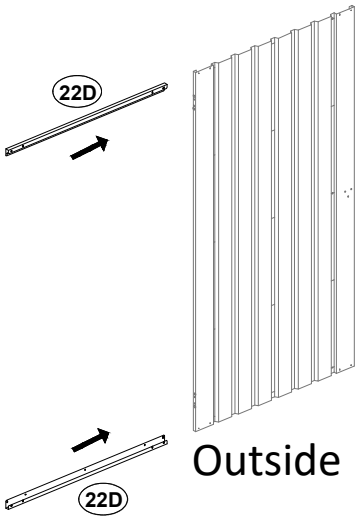

Outside

Inside

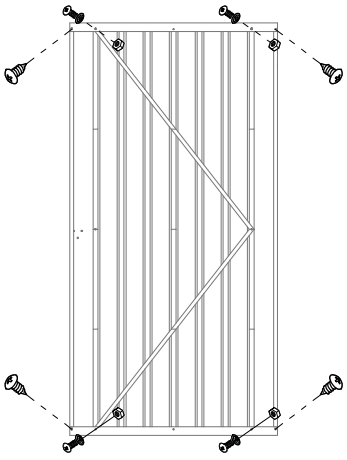

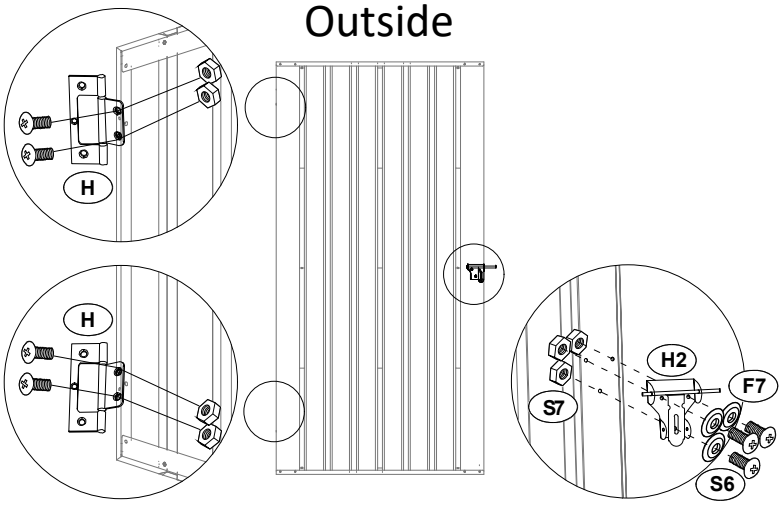

DLA		1
DRC		1
DX3		2
22D		2
H		2
H1		1
F7		19
S6		15
S7		15
S4		16
DD1		2
DPL		1
DPR		1

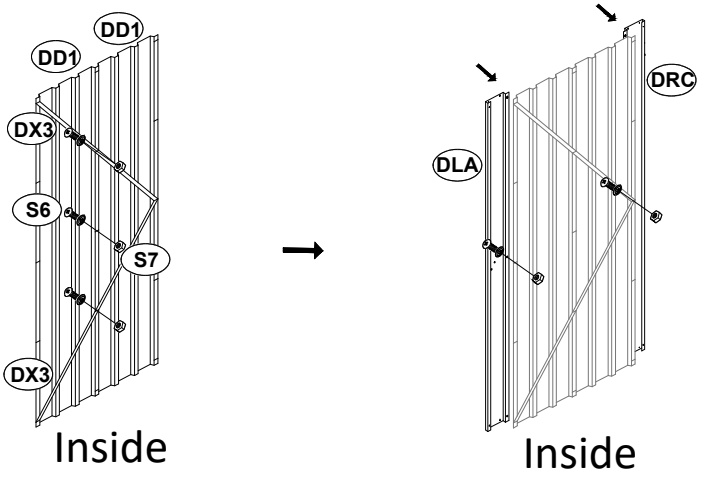

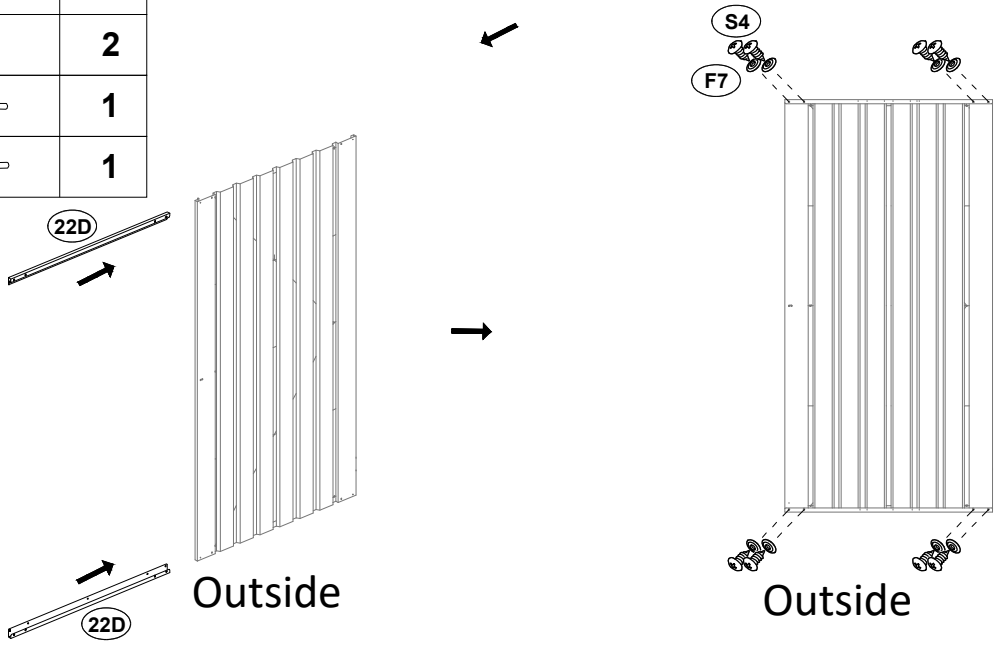

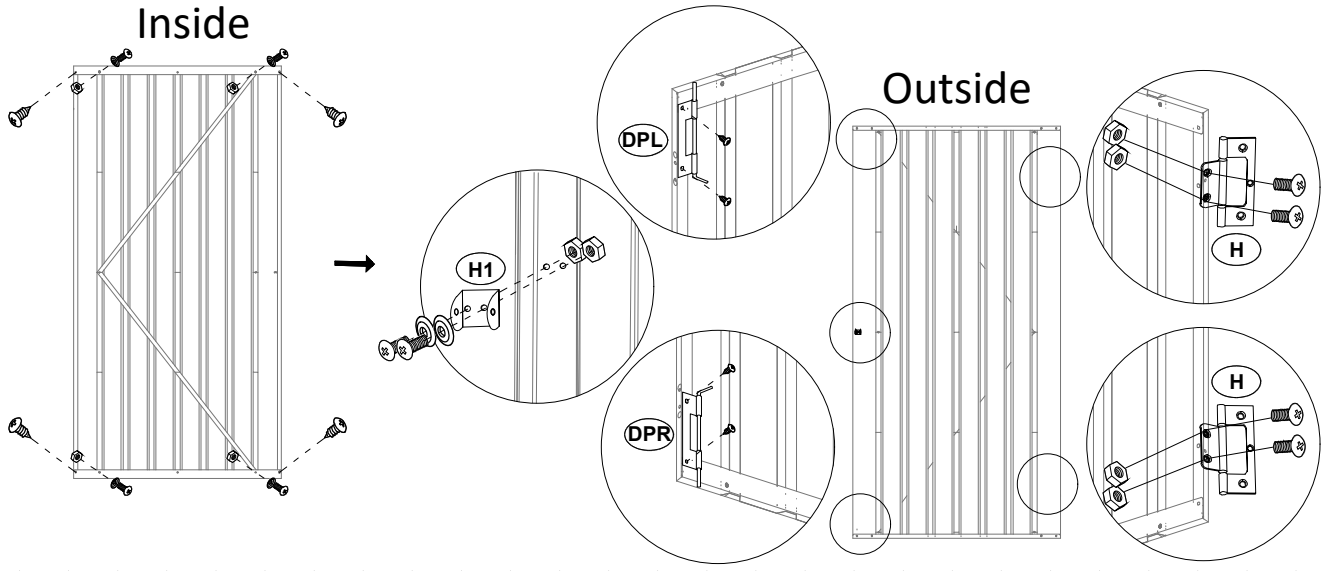

S6		**12**
S7		**12**

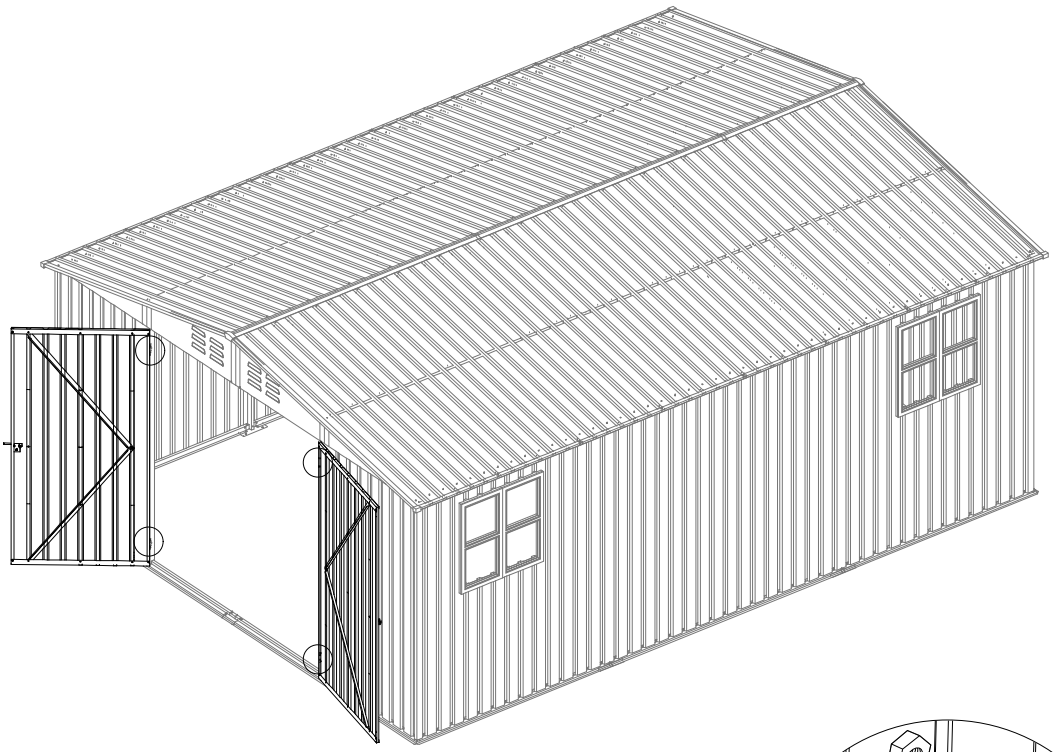

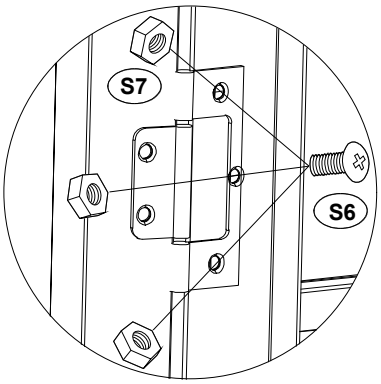

S9		4

40

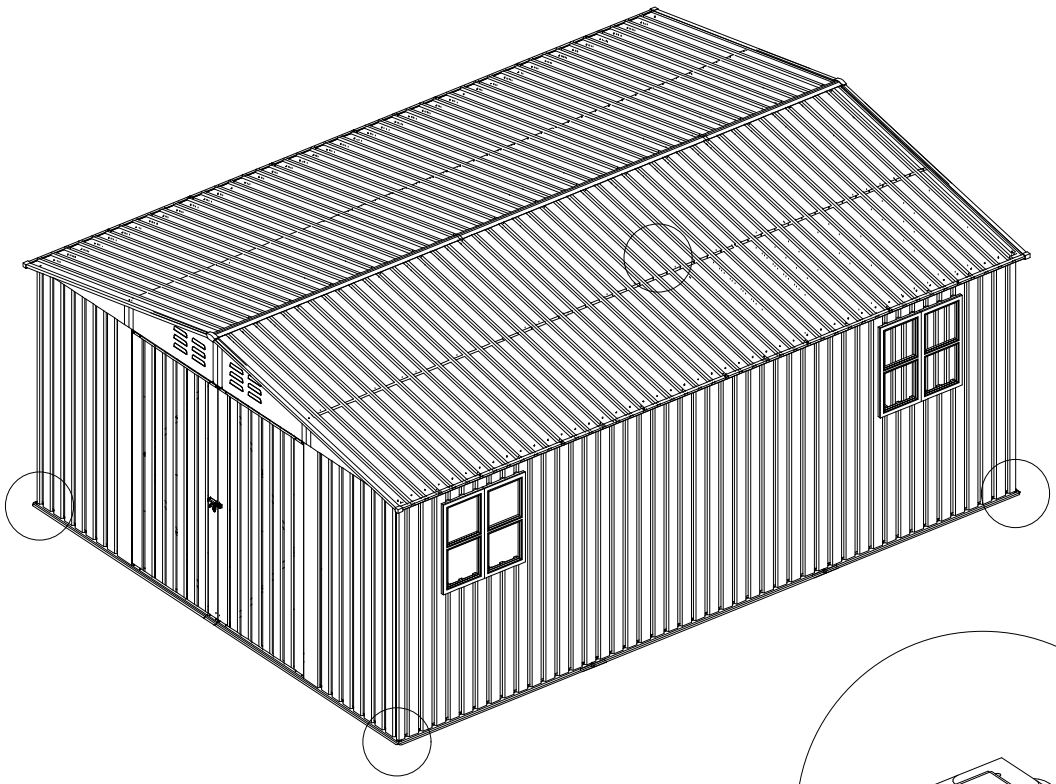

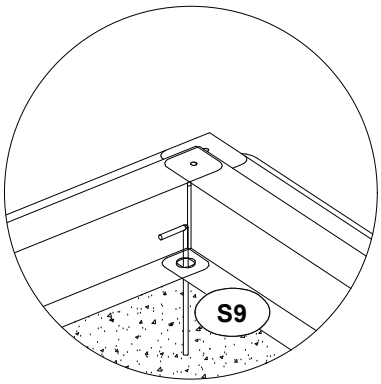

EN:If the shed is installed on grass,the[S9]can be used to increase the stability of the shed.