ASSEMBLY INSTRUCTIONS
BELLA DAYBED

THANK YOU FOR YOUR PURCHASE. PLEASE READ ALL INSTRUCTIONS CAREFULLY BEFORE ASSEMBLING THIS PRODUCT.

· INSPECT ALL PARTS TO MAKE SURE THAT NOTHING IS BROKEN OR MISSING.
IF SOMETHING IS BROKEN OR MISSING, PLEASE CALL OR EMAIL OUR CUSTOMER SERVICE @
1-714-729-3808 OR EMAIL US – SUPPORT@LUXEOUSA.COM (MONDAY TO FRIDAY 9AM TO 5PM PACIFIC TIME)
· DO NOT OVER TIGHTEN THE SCREWS
· ONLY USE HAND TOOLS FOR ASSEMBLY. DO NOT USE POWER TOOLS.

CAUTION: 1. DO NOT FULLY TIGHTEN THE BOLTS UNTIL ALL BOLTS ARE ASSEMBLED.
2. DO NOT OVER TIGHTEN THE BOLTS TO AVOID CAUSING DAMAGES TO THE THREAD.
3. KEEP ALL PARTS AND HARDWARE OUT OF REACH FROM CHILDREN.

TOOLS NEEDED : SCREWDRIVER (NOT PROVIDED)

PART LIST		
ITEM	DESCRIPTION	QTY
A	SIDES (L & R)	2 PCS
B	BACK	1 PC
C	SIDERAIL	1 PC
D	SLATS	2 SET
E	BED LEG	4 PCS

HARDWARE LIST		
ITEM	DESCRIPTION	QTY
1	JCBC BOLT M6 x 45mm	2 PCS
2	M6 FLAT WASHER	2 PCS
3	M6 SPRING WASHER	2 PCS
4	CSK SCREW M4 x 38mm	8 PCS
5	ALLEN KEY M4	1 PC
6	ALLEN KEY M5	1 PC

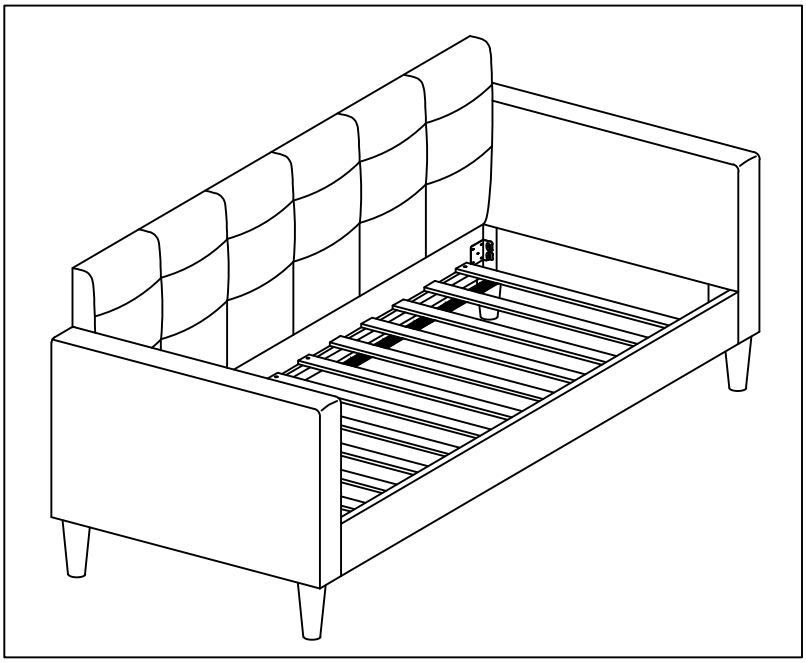

STEP 1

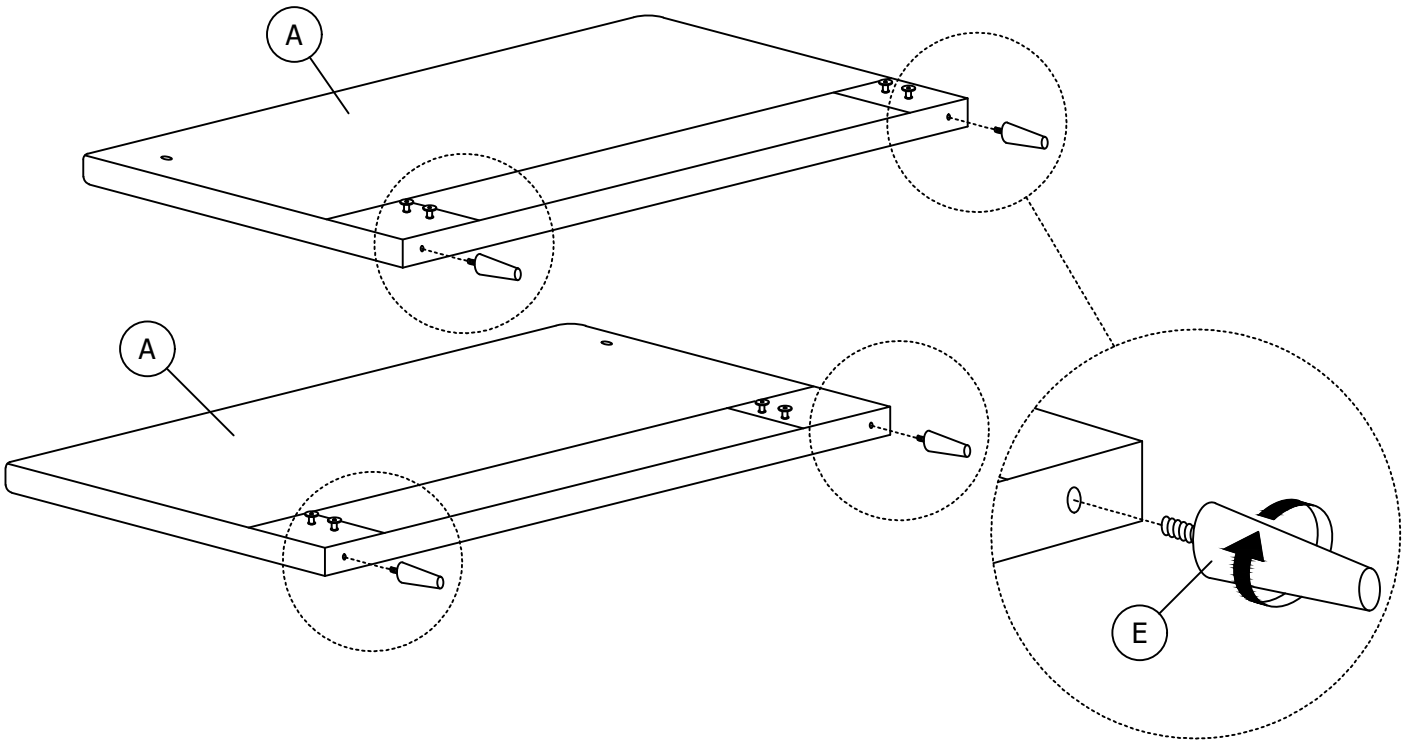

STEP 2

STEP A : USE THE ALLEN KEY M5 (6) TO TURN LOOSE ALL THE JCBB BOLT PREFIX AT SIDES (A) , BUT DO NOT PULL OUT.

STEP B : TIGHTEN THEM AFTER THE BACK (B) & SIDE RAIL (C) ARE ASSEMBLED.

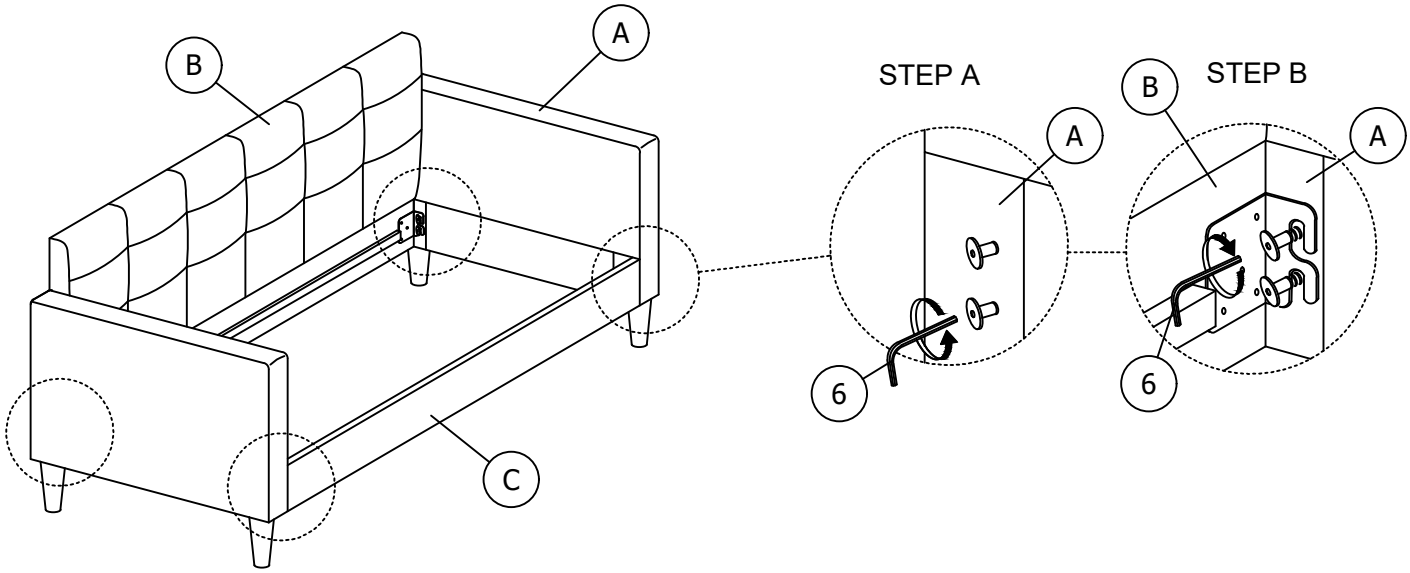

STEP 3

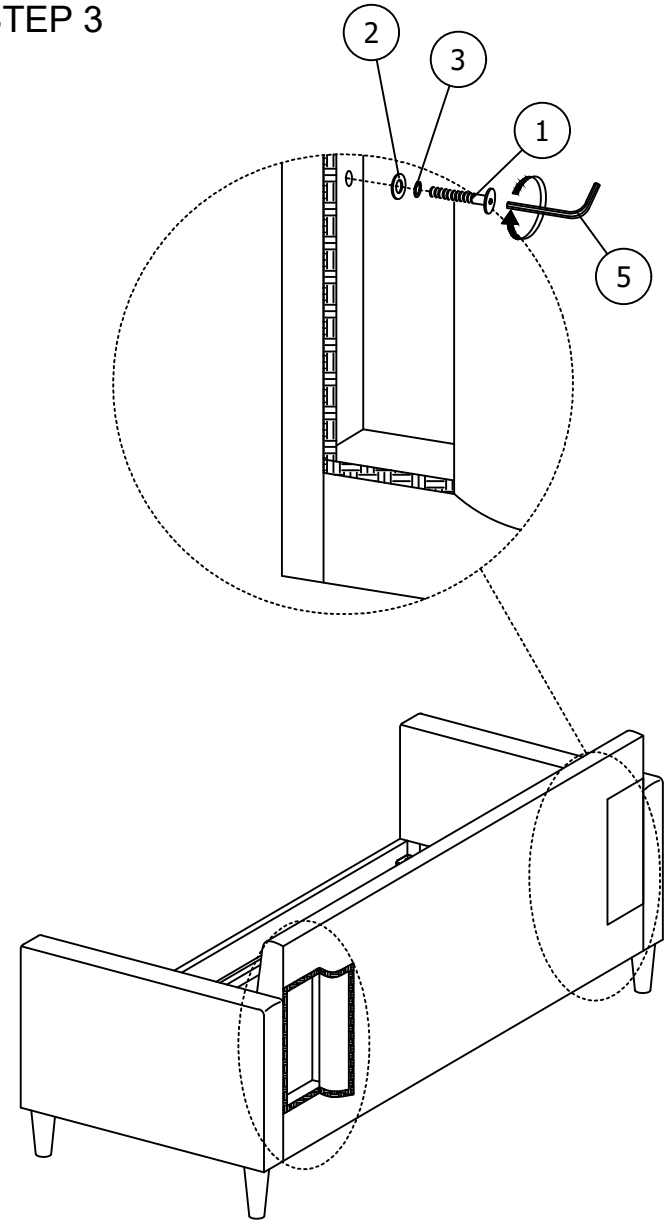

STEP 4

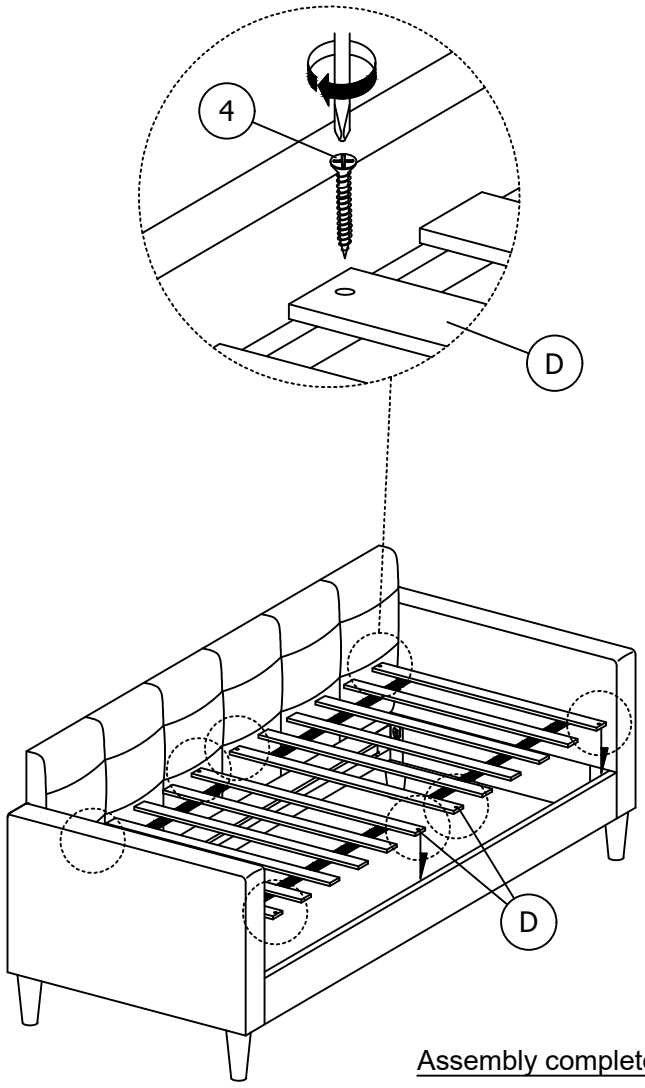

Assembly completed

Reminder:Please ensure all bolts and screws are tightened and secure before you use it.

* When moving bed position, the center support leg levelers must be adjust up right to avoid breakage of the leg and center support.