Assembly Instructions

Caution: You must read this before you proceed

Care & Maintenance



- Not for commercial use. For residential use only.



- Furniture may scratch floors. We recommend using furniture pads to protect your floors.



- Do not put hot items directly on furniture surface.



- Do not clean furniture with harsh cleansers or polish.



- Do not place furniture under direct sunlight.



- Do not place furniture near heating or cooling vents.



- Do not write on furniture without a padded barrier to protect the surface.



- Do not place furniture outside . For indoor use only.



- Stains may be removed with mild soap solution and damp cloth.



- Children should not climb or jump on the furniture.



- Dust and pick-up spills using a clean, non-colored, lint-free cloth.

Please look in the box for hardware packs and legs.

Bed
N757P469341

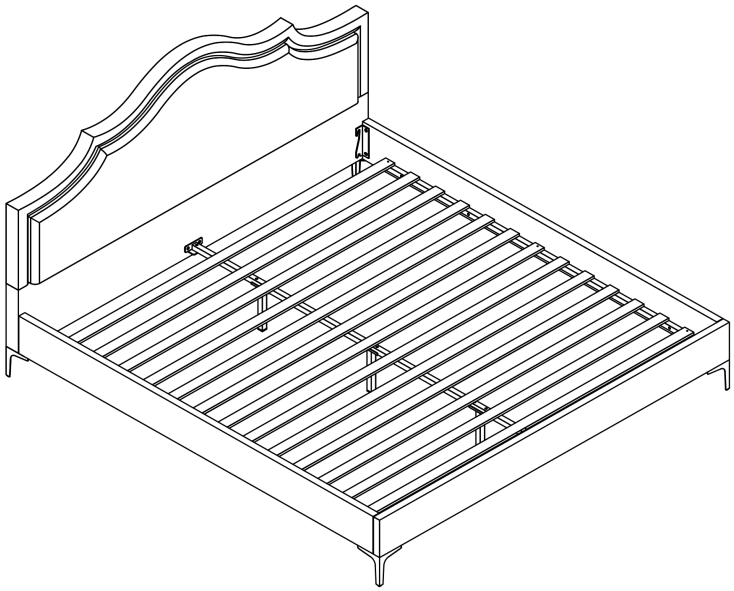

Part List N757P469341

Label	Picture	Description	QTY
A	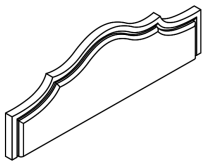	Head board	1
B	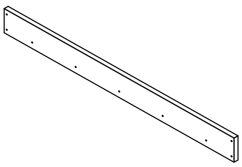	Side rail	2
C	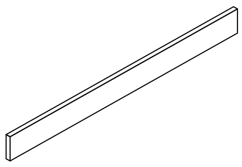	Foot board	1
D	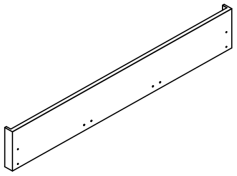	Base board	1

E	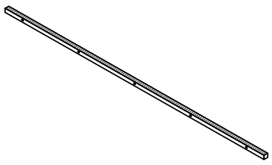	Side rails support bar	2
F	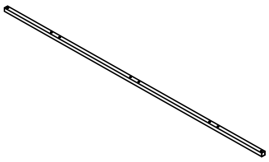	Center support bar	1
G	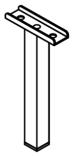	Middle support leg	3
H		Bed legs	4
I	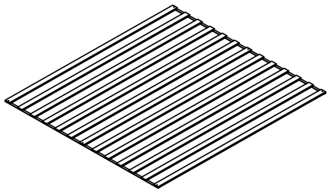	Slats	1

Hardware N757P469341

Label	Picture	Description	QTY
①		Allen Wrench	1
②		Bolts (M8x20mm)	36
③		Bolts (M8x45mm)	18
④		Nails (M4x30mm)	22
⑤		Hinge	4
⑥		Center support bar fittings	2
⑦	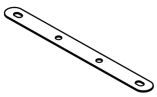	Four hole iron	2
⑧	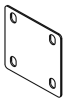	Four hole iron	2

Assembly Preparation

Before Beginning Assembly:

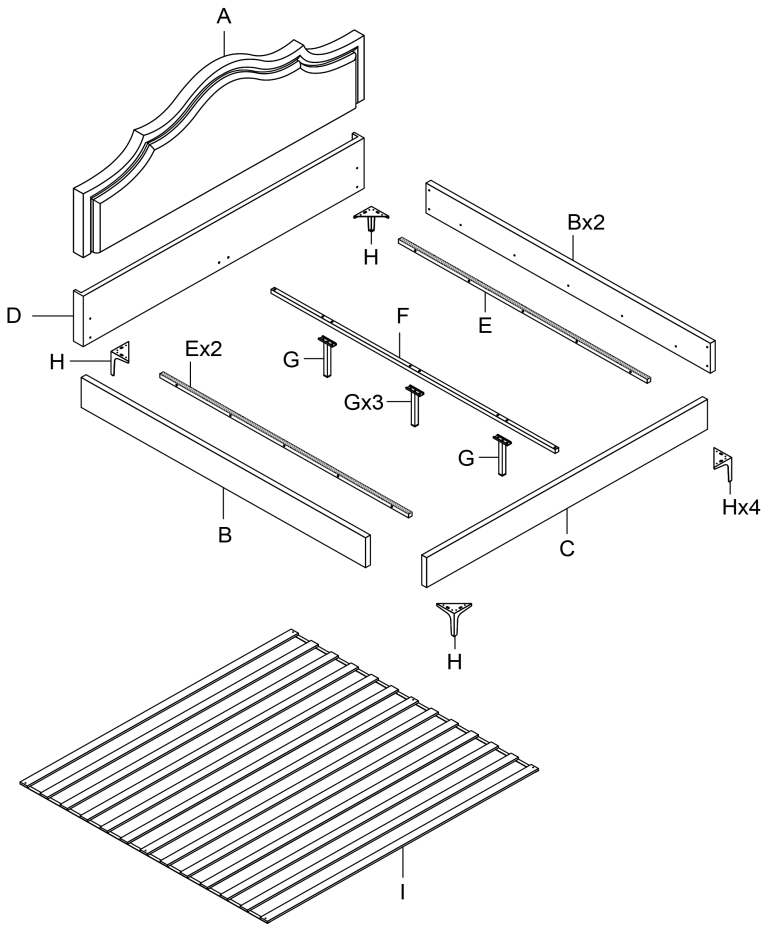

1		x1	5		x4
2		x36	6		x2
3		x18	7		x2
4		x22	8		x2

- Read instructions, cover to cover-
- Have 2 adults on hand for assembly-
- Do not assemble on flooring or carpet-
- Assemble on a clean non-marring surface (packing foam)-
- Save all packaging until finished-

Assembly Steps

OVERVIEW

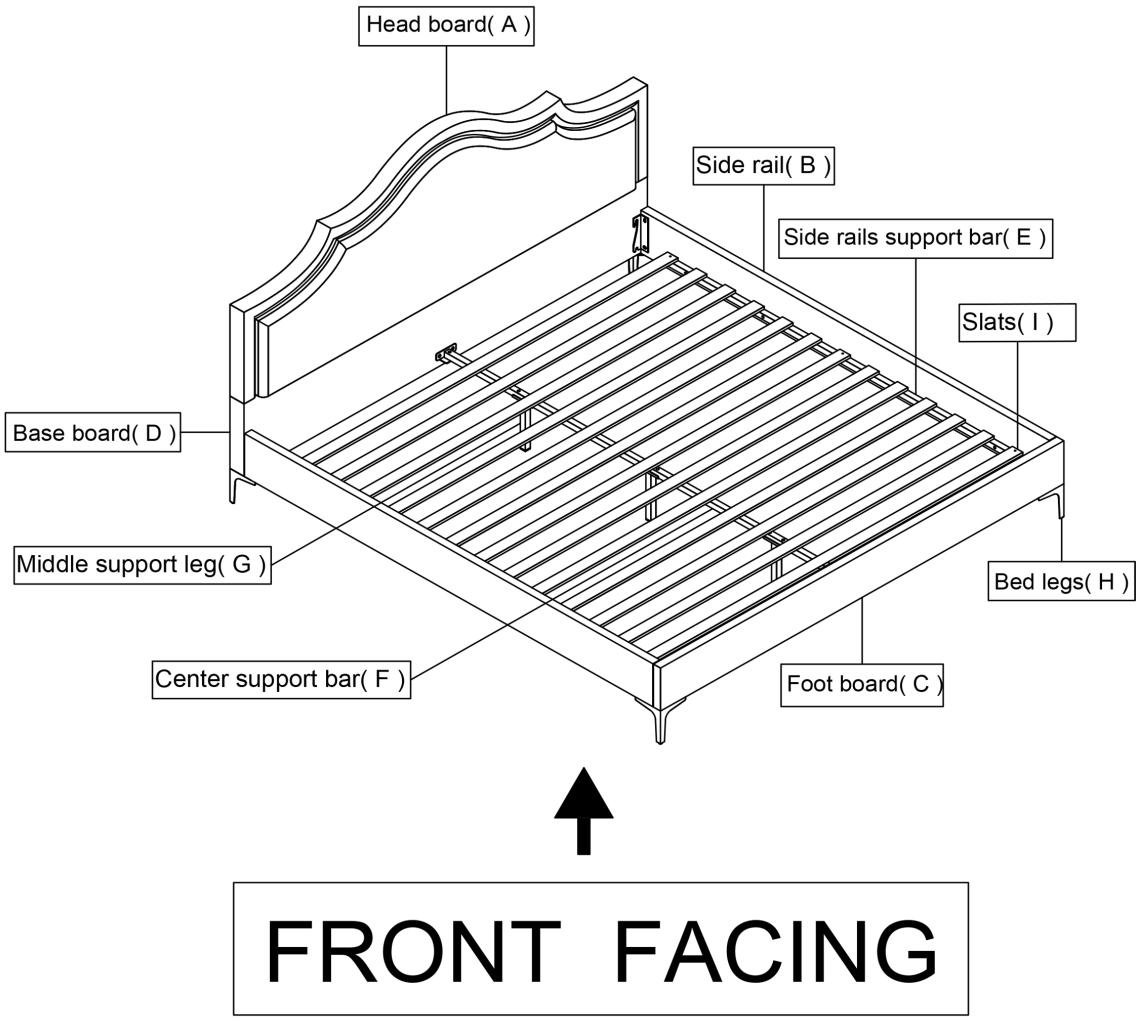

This Bed have multiple parts and may require up to 45 minutes to assemble. To give you an overview of the Bed parts, the above picture is to help you put the various parts into perspective. Please read through the instructions below to familiarise yourself with the parts and steps before assembly.
Note: It is recommended that you have an adult partner to assist during the entire assembly process.

Step 1

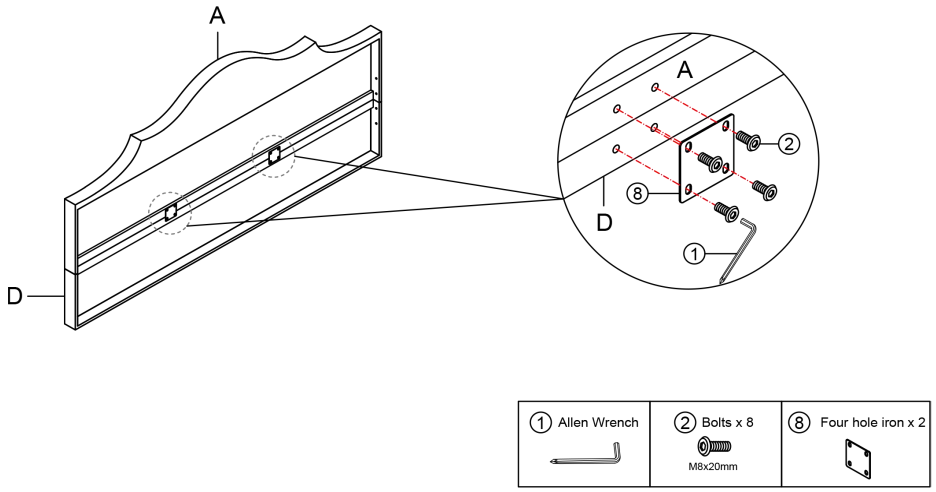

Attach the Base board D to the Head board A with Bolts ② and Four hole iron ⑧ by using Allen Wrench ①.

Step 2

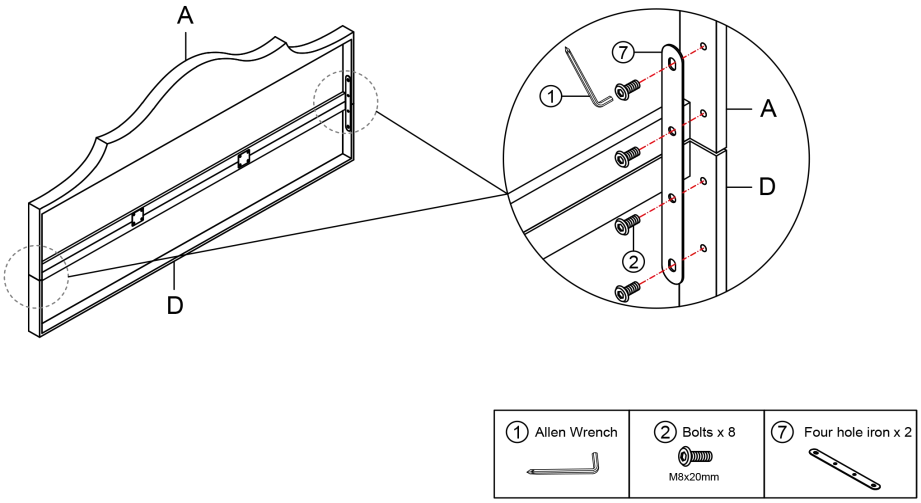

Attach the Base board D to the Head board A with Bolts ② and Four hole iron ⑦ by using Allen Wrench ①.

Step 3

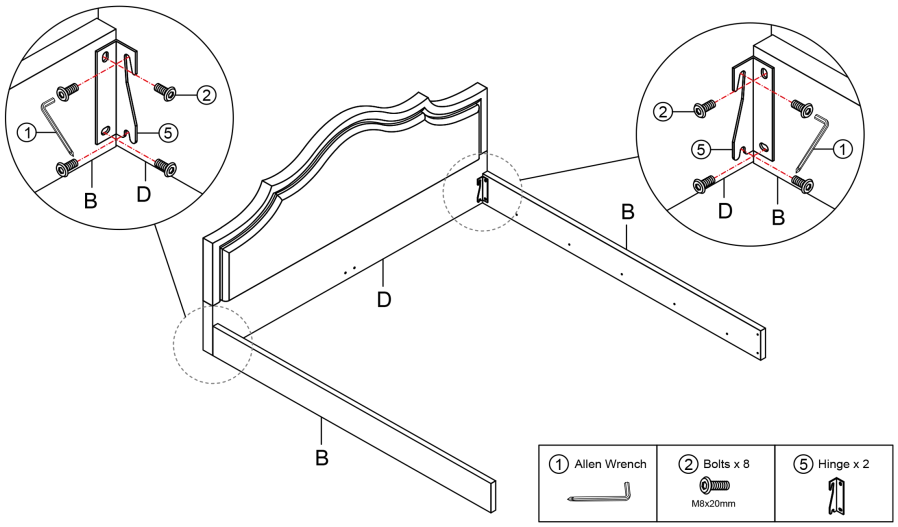

Attach the Side rail B to the Base board D with Bolts ② and Hinge ⑤ by using Allen Wrench ①.

Step 4

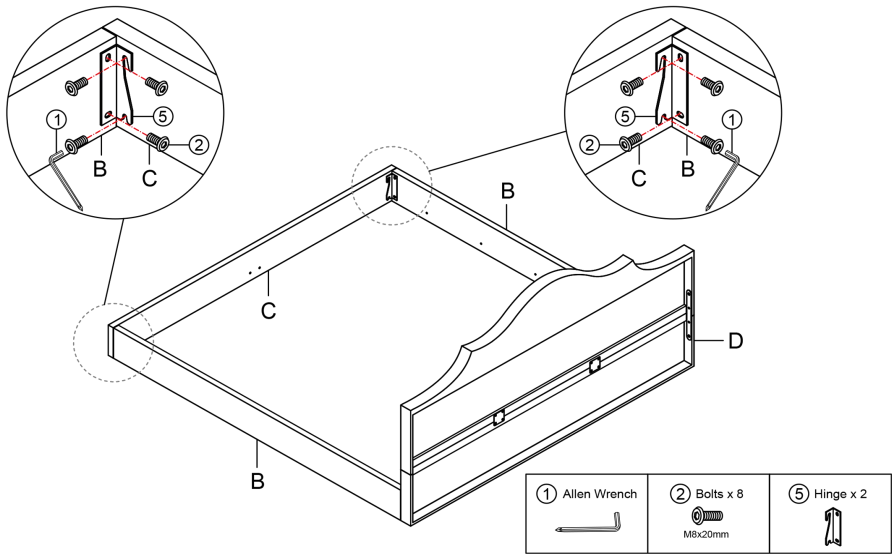

Attach the Foot board C to the Side rail B with Bolts ② and Hinge ⑤ by using Allen Wrench ①.

Step 5

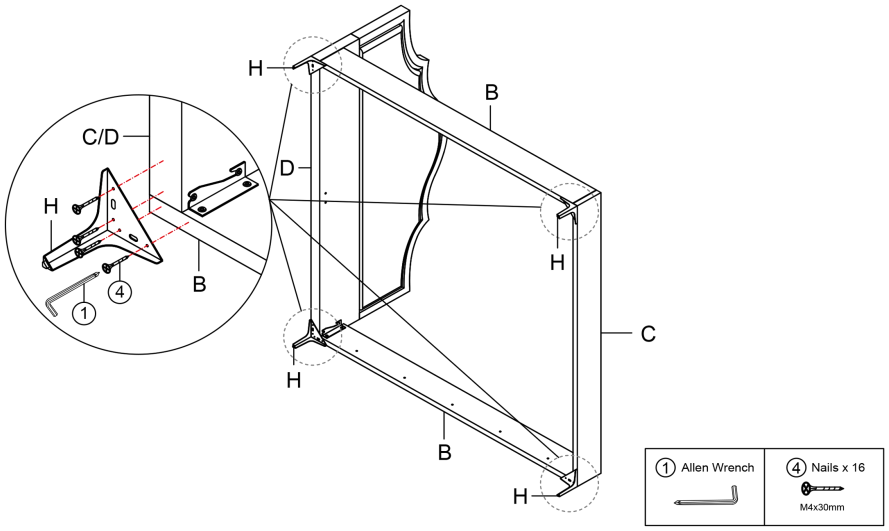

Attach the Bed legs H to the Side rail B, Foot board C and Base board D with Nails ④ by using Allen Wrench ①.

Step 6

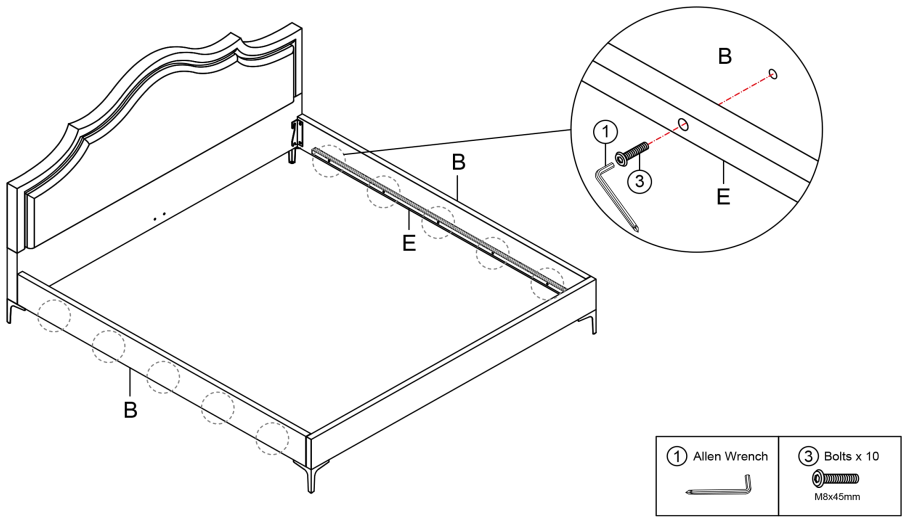

Attach the Side rails support bar E to the Side rail B with Bolts ③ by using Allen Wrench ①.
NOTICE:DO NOT FULLY TIGHTHEN BOLTS IN ONE GO, TIGHTEN THE BOLTS AFTER 10 BOLTS ③ ARE ATTACHED.

Step 7

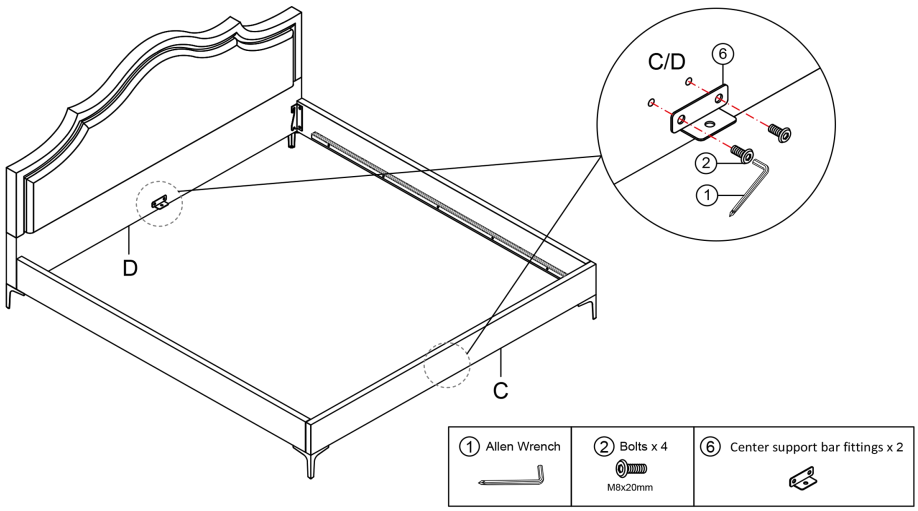

Attach the Center support bar fittings ⑥ to the Foot board C and Base board D with Bolts ② by using Allen Wrench ①.

Step 8

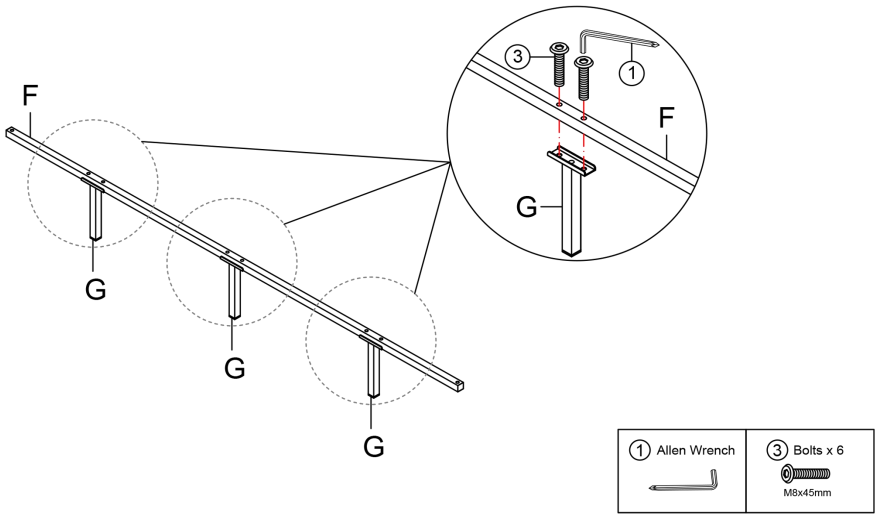

Attach the Middle support leg G to the Center support bar F with Bolts ③ by using Allen Wrench ①.

Step 9

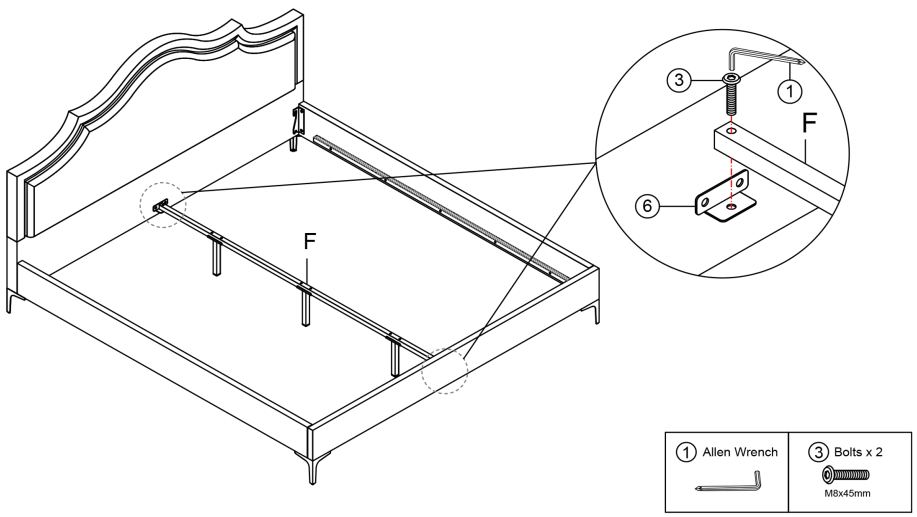

Attach the Center support bar F to the Center support bar fittings ⑥ with Bolts ③ by using Allen Wrench ①.

Step 10

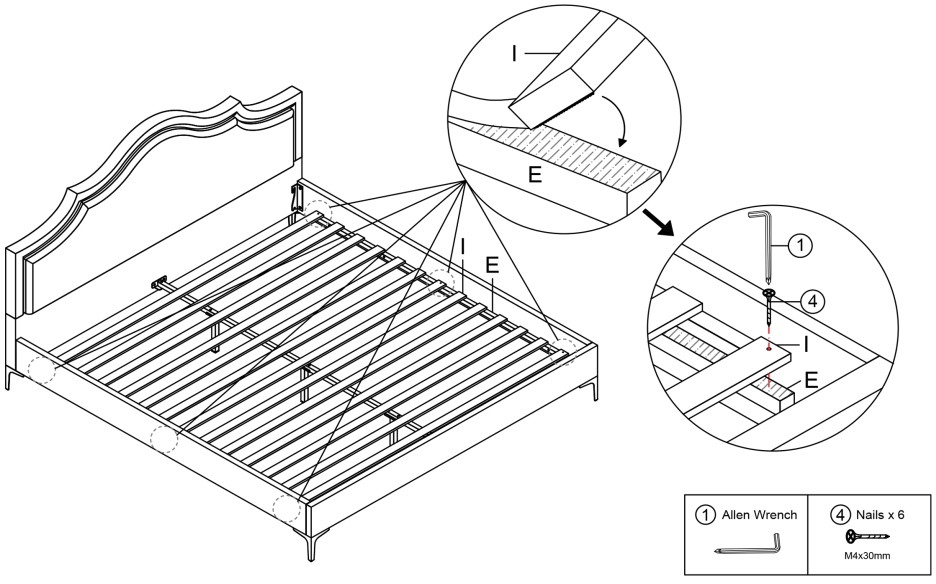

Attach the Slats I to the Side rails support bar E with Nails ④ by using Allen Wrench ①.

Step 11	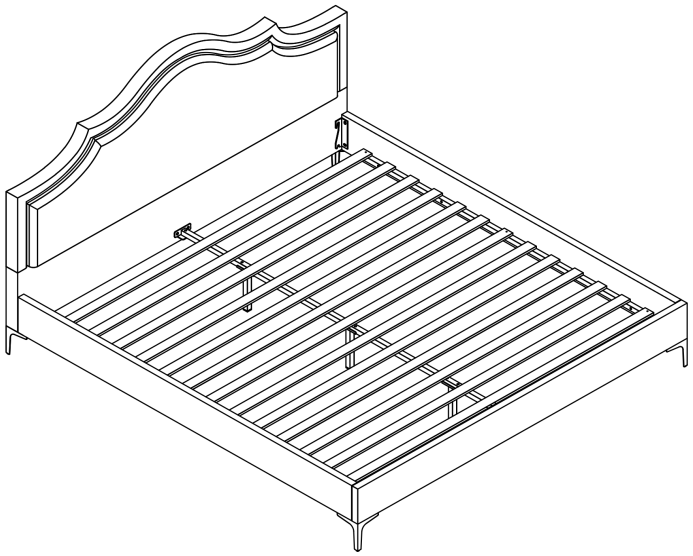

Your Bed is ready for use.
This Bed can only be used on a flat, level surface.

Place the Bed on a LEVEL SURFACE.
Inspect it and make sure all parts are adequately connected.
Don't push too hard, shake on the bed.
This would help to align all the parts at all the joint areas.
CAUTION 1: When tightenlng these screws, tighten sequentlally.
DO NOT tighten any screw fully and then towards the next one.
Thls would cause the frame to warp.
If there is stlll wobbles, loosen the screws and execute this same process.DO NOT tighten any screw fully and then towards the next one.
WARNING!! IF BED IS NOT STABLE,IT COULD LEAD TO DAMAGING THE PRODUCT.
Ensure all screws are fully locked into position.