2-DRAWERS CABINET

Assembly Instructions – Please keep for future reference

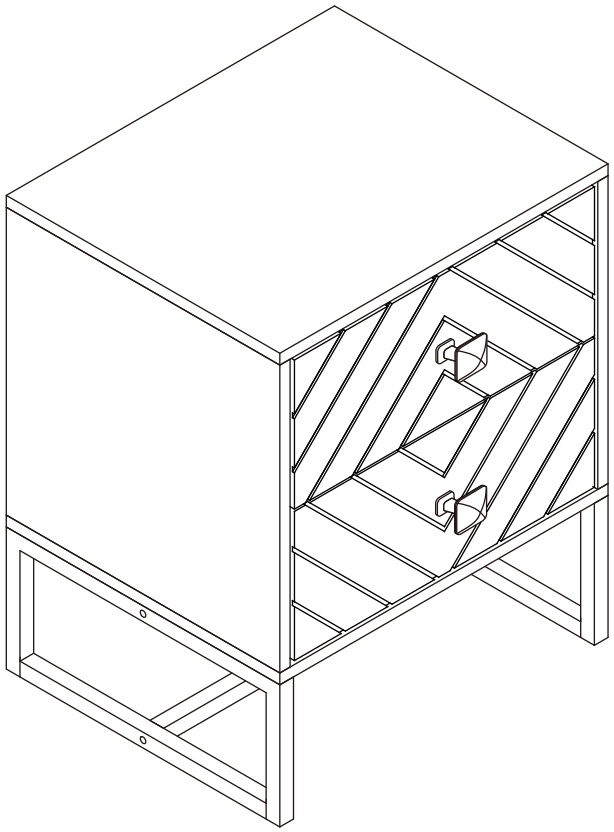

Dimensions	No. people	Assembly Time
Width: 39.5 cm Depth: 48 cm Height: 60 cm		40 mins (approx.)

Important

- PLEASE READ THESE INSTRUCTIONS FULLY BEFORE STARTING ASSEMBLY
- PLEASE DO NOT THROW THE PACKAGING AWAY UNTIL YOU ARE SATISFIED WITH PURCHASE, GOODS NEED TO BE RETURNED IN ORIGINAL PACKAGING.

⚠ Safety and Care Advice

Important

- PLEASE READ THESE INSTRUCTIONS FULLY BEFORE STARTING ASSEMBLY
- PLEASE DO NOT THROW THE PACKAGING AWAY UNTIL YOU ARE SATISFIED WITH PURCHASE, GOODS NEED TO BE RETURNED IN ORIGINAL PACKAGING.

- Check you have all the components and tools listed on pages 4 and 5.
- Remove all fittings from the plastic bags and separate them into their groups.
- Keep children and animals away from the work area, small parts could choke if swallowed.
- Make sure you have enough space to lay out the parts before starting.
- Do not stand or put weight on the product, this could cause damage.
- Assemble the item as close to its final position (in the same room) as possible.
- Assemble on a soft, level surface to avoid damaging the unit or your floor.
- We do not recommend the use of power drill/drivers for inserting screws, as this could damage the unit. Only use hand screwdrivers.



- Dispose of all packaging carefully and responsibly.

Care and Maintenance

- Only clean using a damp cloth and mild detergent, do not use bleach or abrasive cleaners.
- From time to time check that there are no loose screws on this unit.
- This product should not be discarded with household waste. Take to your local authority waste disposal centre.

If kept outside please ensure in the winter months that the product is correctly covered or put away into a dry environment to prevent corrosion, weathering or damage.

If your product is not designed to be outside, we recommend that it is always kept indoors in a dry environment.

If you are unhappy with the product and wish to return it, please follow the retailer's returns procedure.

Exploded View

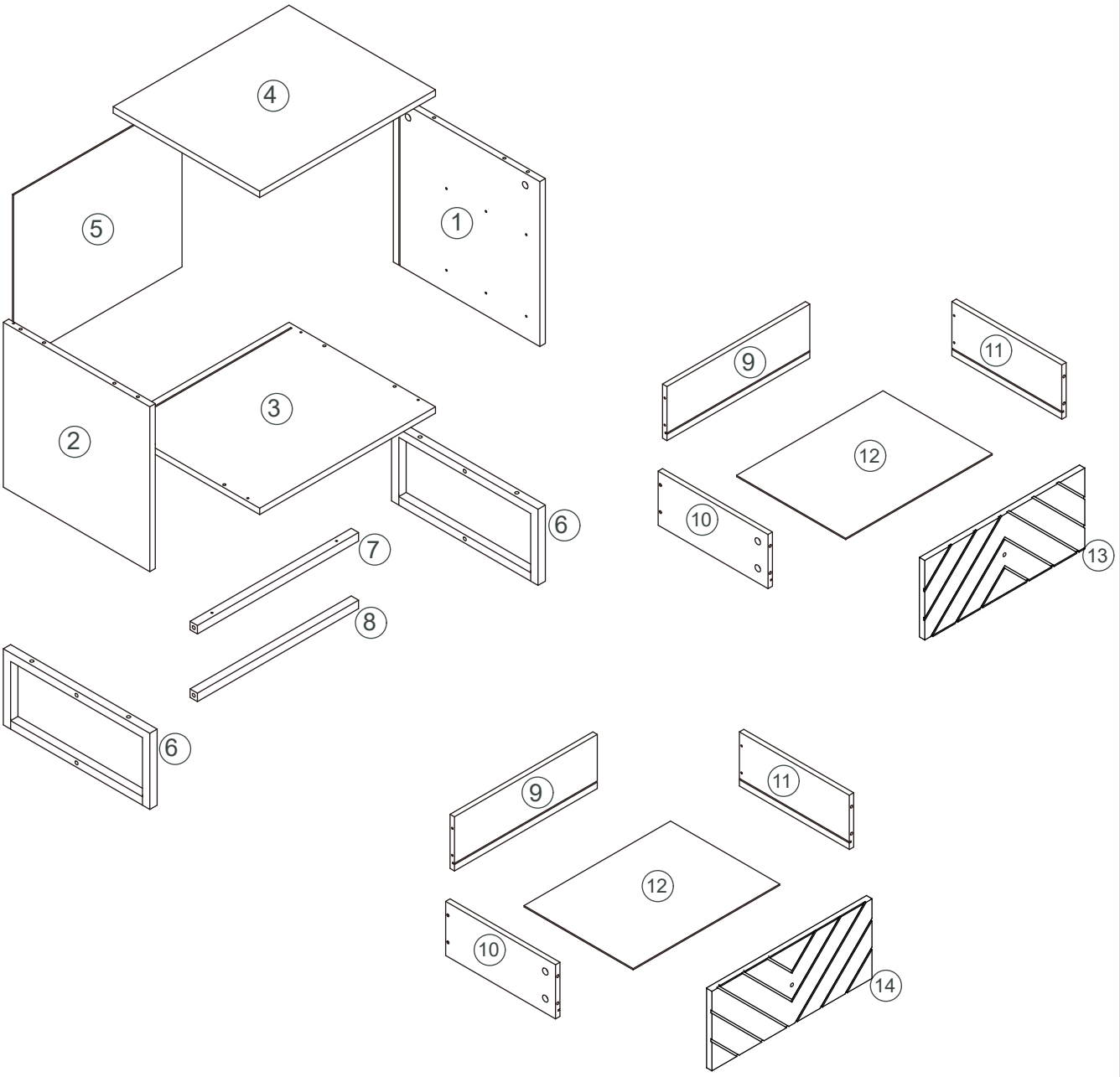

Components - Panels

Please check that you have all the components listed below before constructing your item.

Part No	Description	Qty	Thickness (mm)
1	Right Side Panel	1	15mm
2	Left Side Panel	1	15mm
3	Bottom Panel	1	15mm
4	Top Panel	1	15mm
5	Back Panel	1	3mm
6	Metal Leg	2	18mm
7	Upper Metal Tube	1	18mm
8	Lower Metal Tube	1	18mm
9	Drawer Back Panel	2	12mm
10	Drawer Left Side Panel	2	12mm
11	Drawer Right Side Panel	2	12mm
12	Drawer Bottom Panel	2	3mm
13	Upper Drawer Front Panel	1	15mm
14	Lower Drawer Front Panel	1	15mm

Important – Please read these instructions fully before starting assembly

Components - Fixings

Please check that you have all the components listed below before constructing your item.

Note: The quantities below are the correct amount to complete the assembly. In some cases more fittings may be supplied than are required.

(A)	Left Female Runner 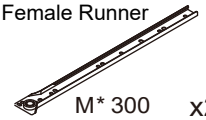 M* 300 x2	**(B)**	Right Female Runner 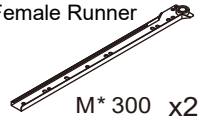 M* 300 x2	**(C)**	Screw  ∅3*12 x24+2	**(D)**	Dowel  ∅6*30 x8
(E)	Screw  ∅4*30 x14+1	**(F)**	Cam Bolt  x12+1	**(G)**	Cam Lock  x12+1	**(H)**	Wall Fixing Stripe  x2
(I)	Screw  M4*12 x1	**(J)**	Rear Panel Hook  x4	**(K)**	Screw  ∅3*14 x4	**(L)**	Bolt  M6*30 x8
(M)	Allen Key 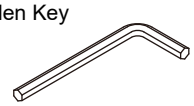 x1	**(N)**	Bolt  M4*20 x2	**(O)**	Handle  x2	**(P)**	Left Male Runner 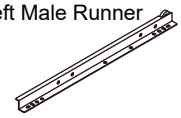 x2
(Q)	Right Male Runner 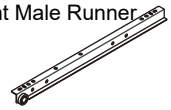 x2	**(R)**	Wall Anchor  x1	**(S)**	Screw  ∅4*35 x1		

Tools Required

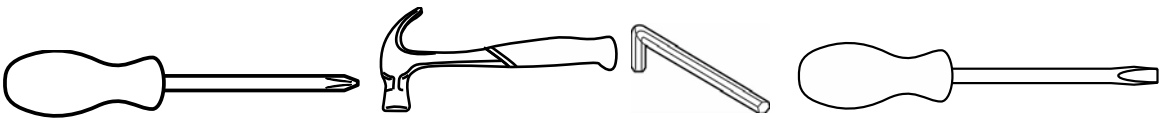

Ruler – Use this to measure your screws (mm)

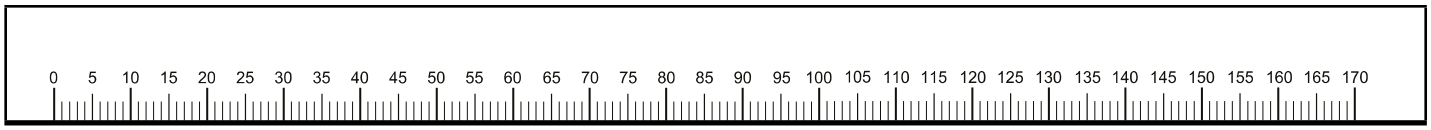

Important – Please read these instructions fully before starting assembly

Assembly Instructions

Step 1

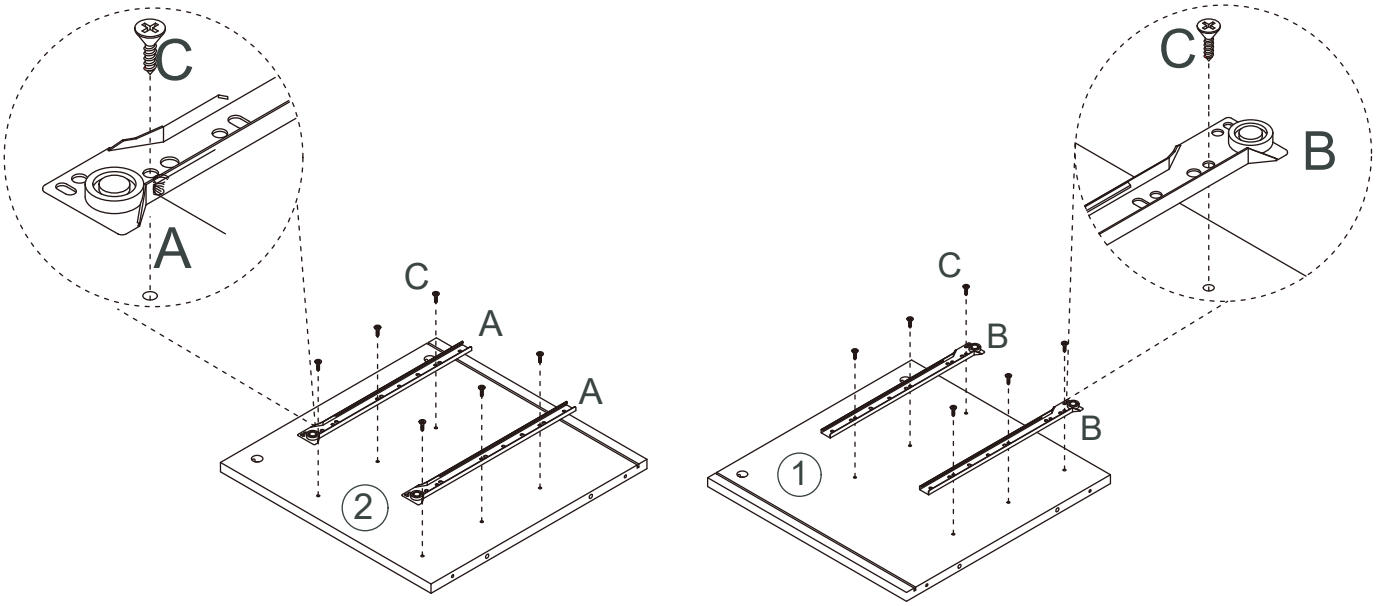

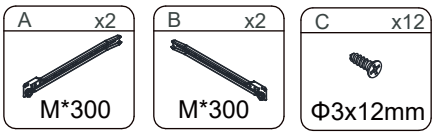

Step 2

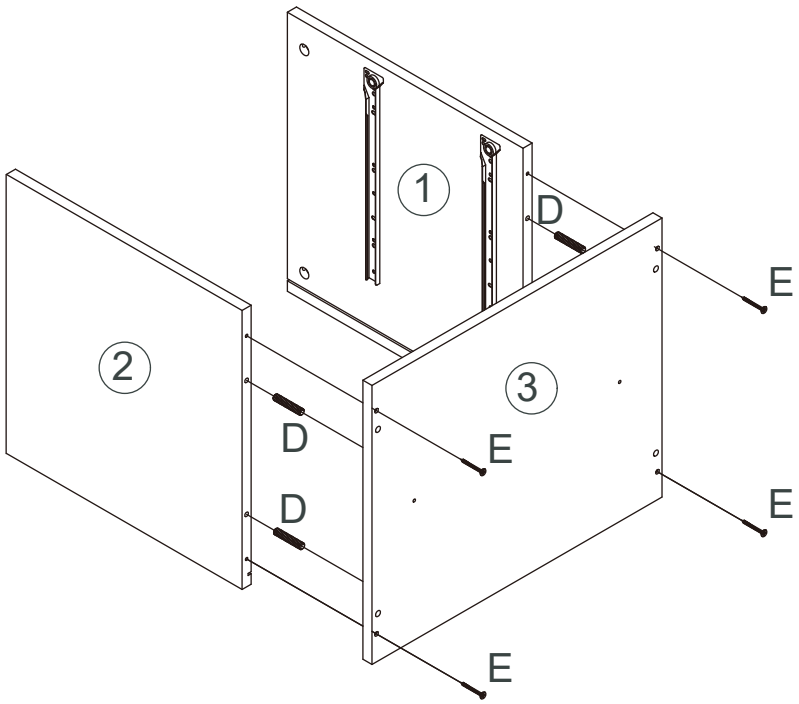

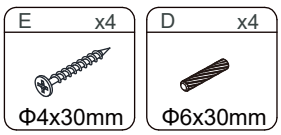

Assembly Instructions

Step 3

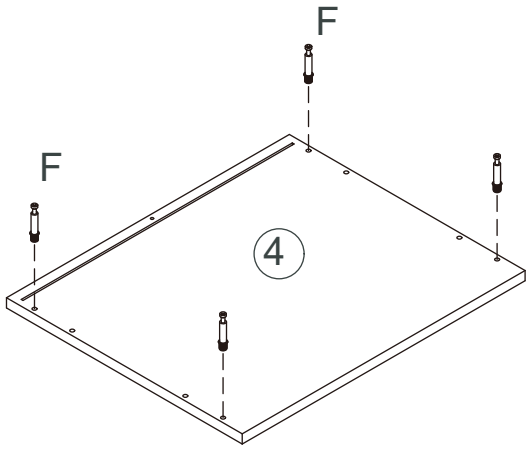

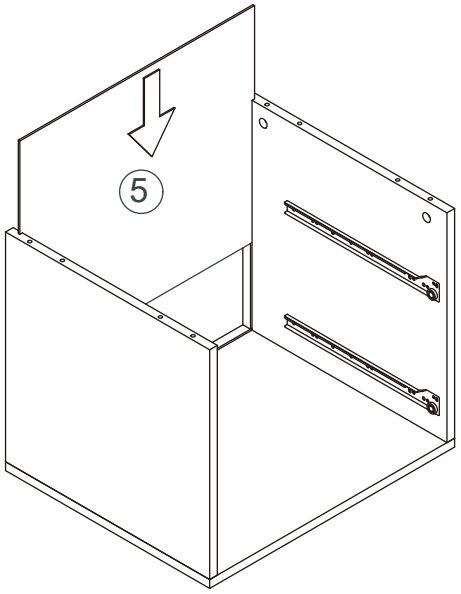

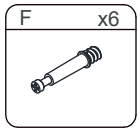

Step 4

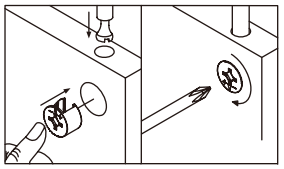

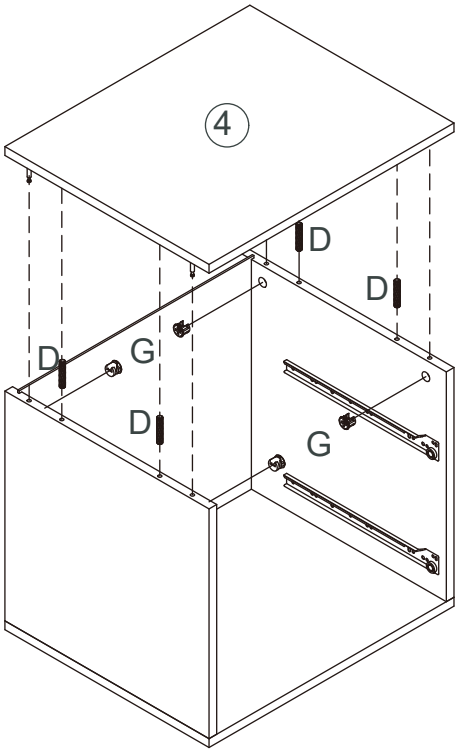

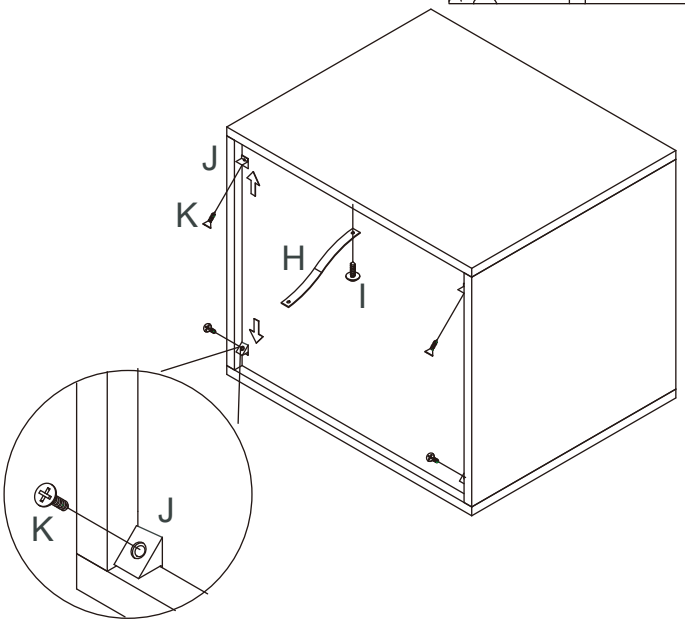

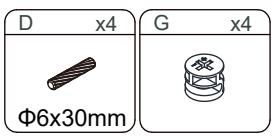

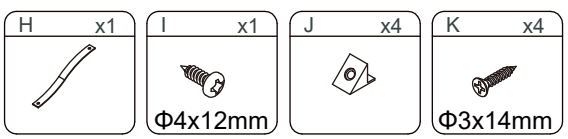

Assembly Instructions

Step 5

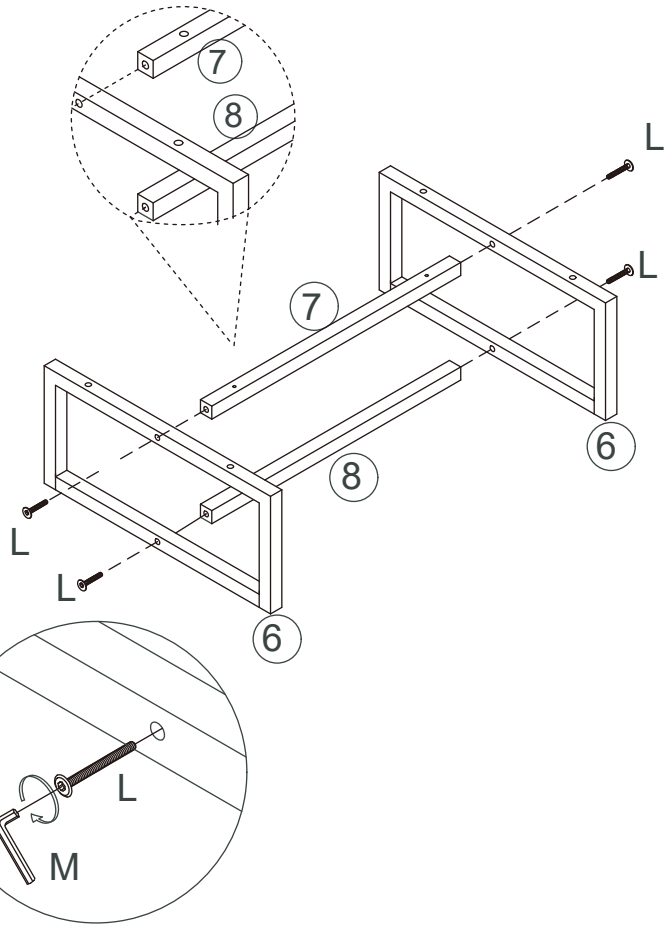

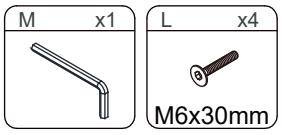

Step 6

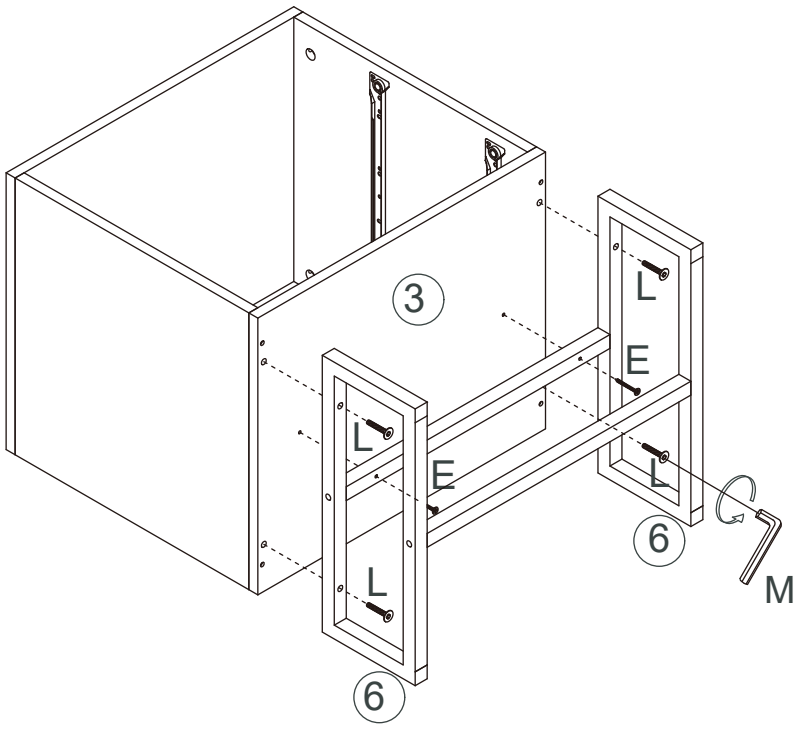



Assembly Instructions

Step 7

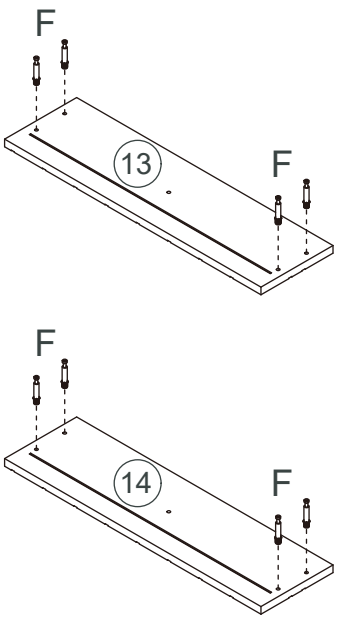

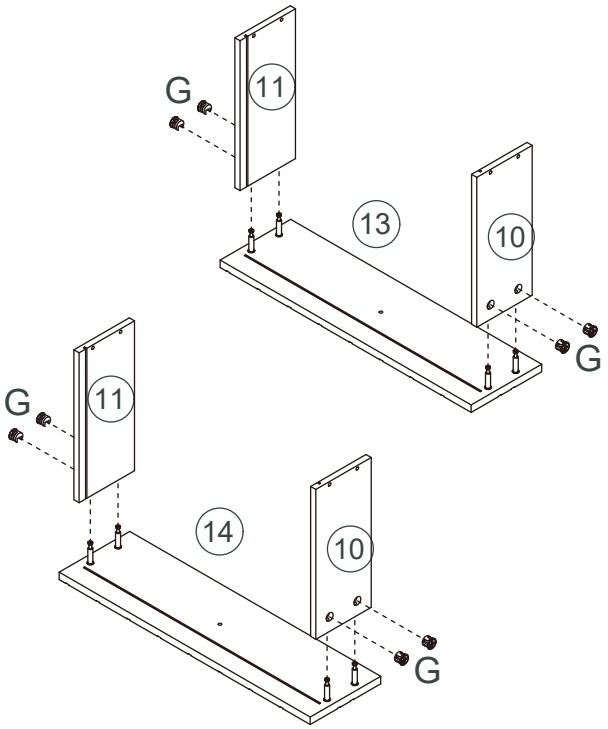

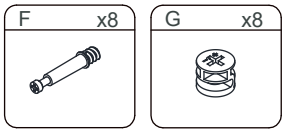

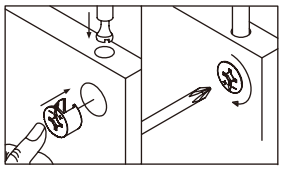

Step 8

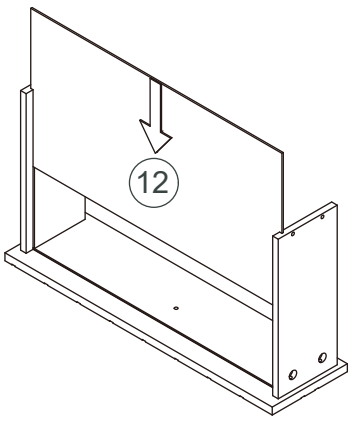

X2

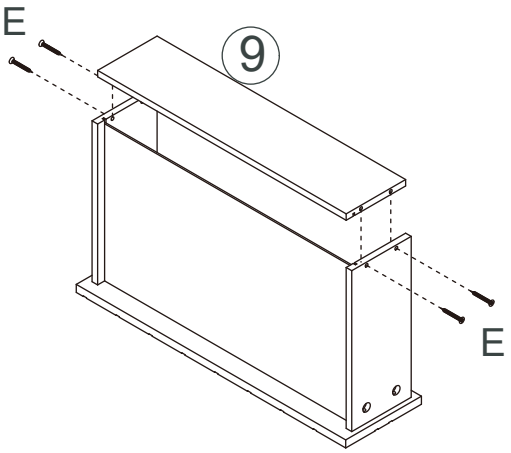

X2



Assembly Instructions

Step 9

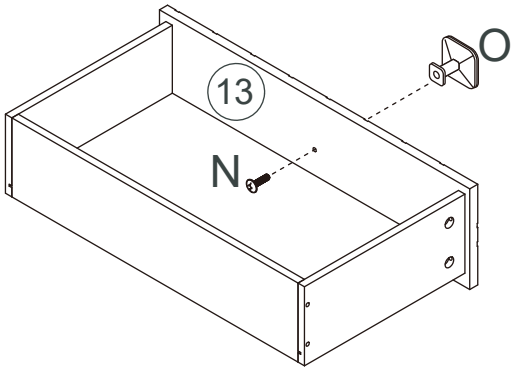

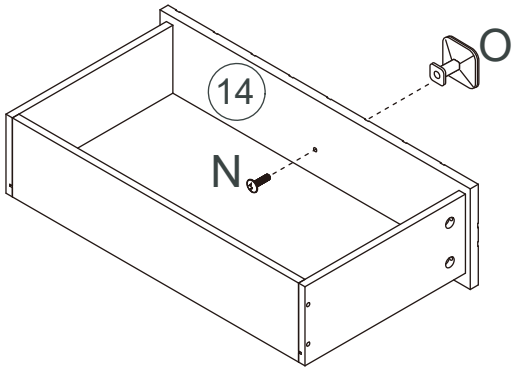

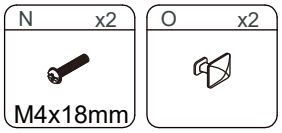

Step 10

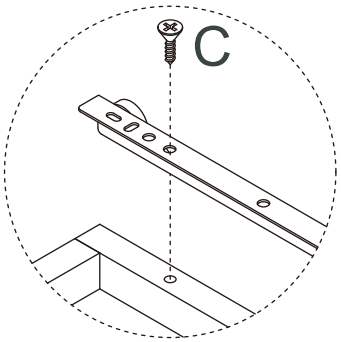

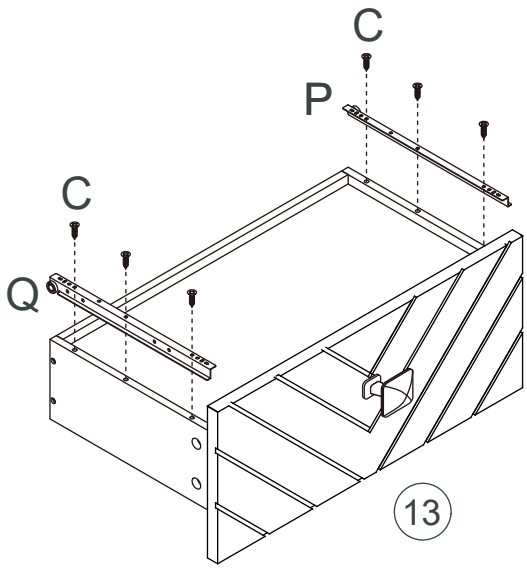

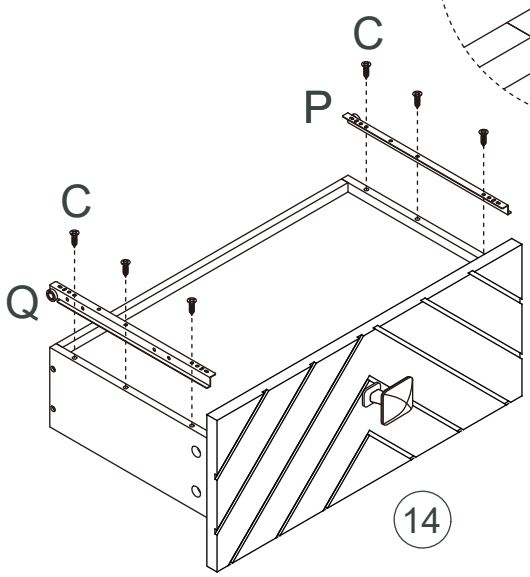

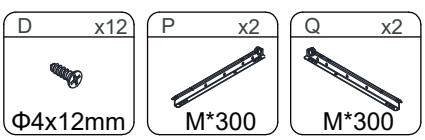

Assembly Instructions

Step 11

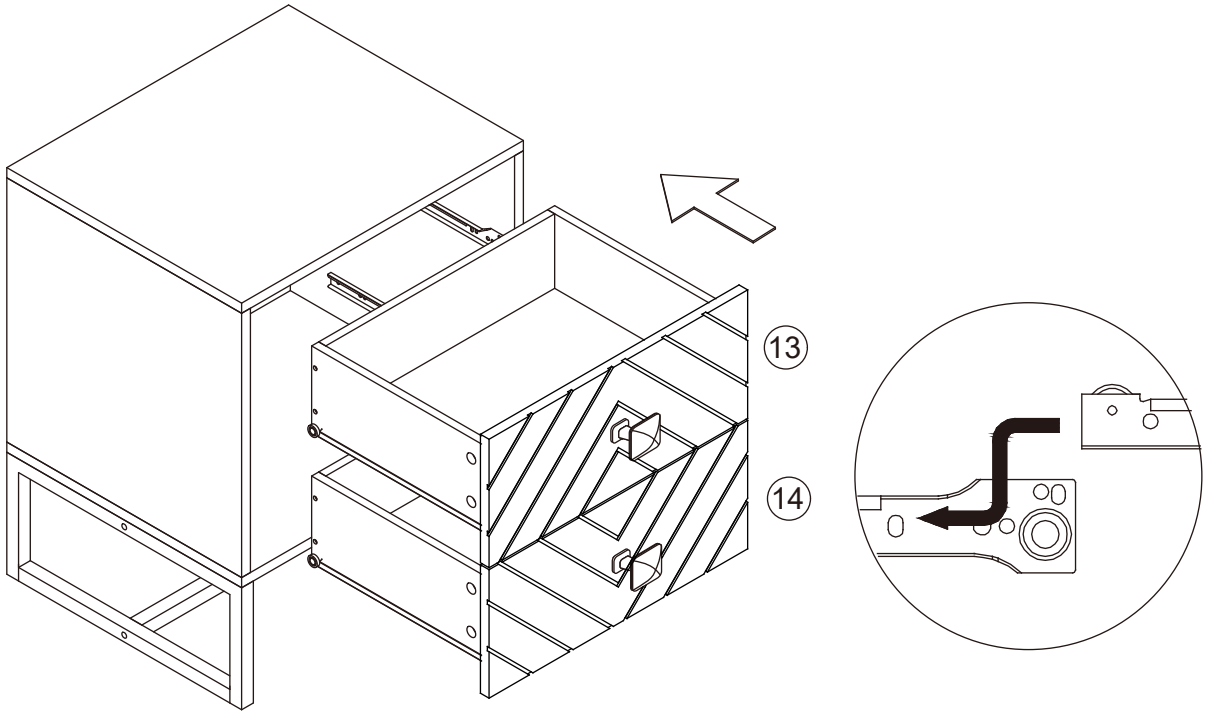

Step 12

