BURN BARRELS

JJ00712-BK

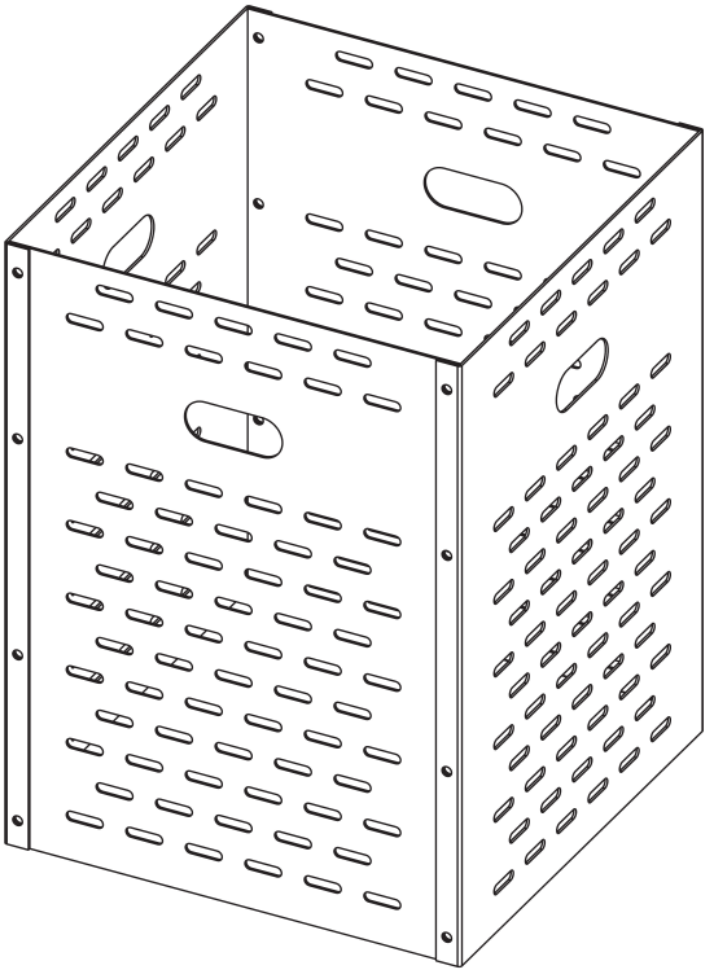

Question? Concerns? We'd love to hear them!
E-mail: jinmai211211@gmail.com and we will reply within 24 business hours.

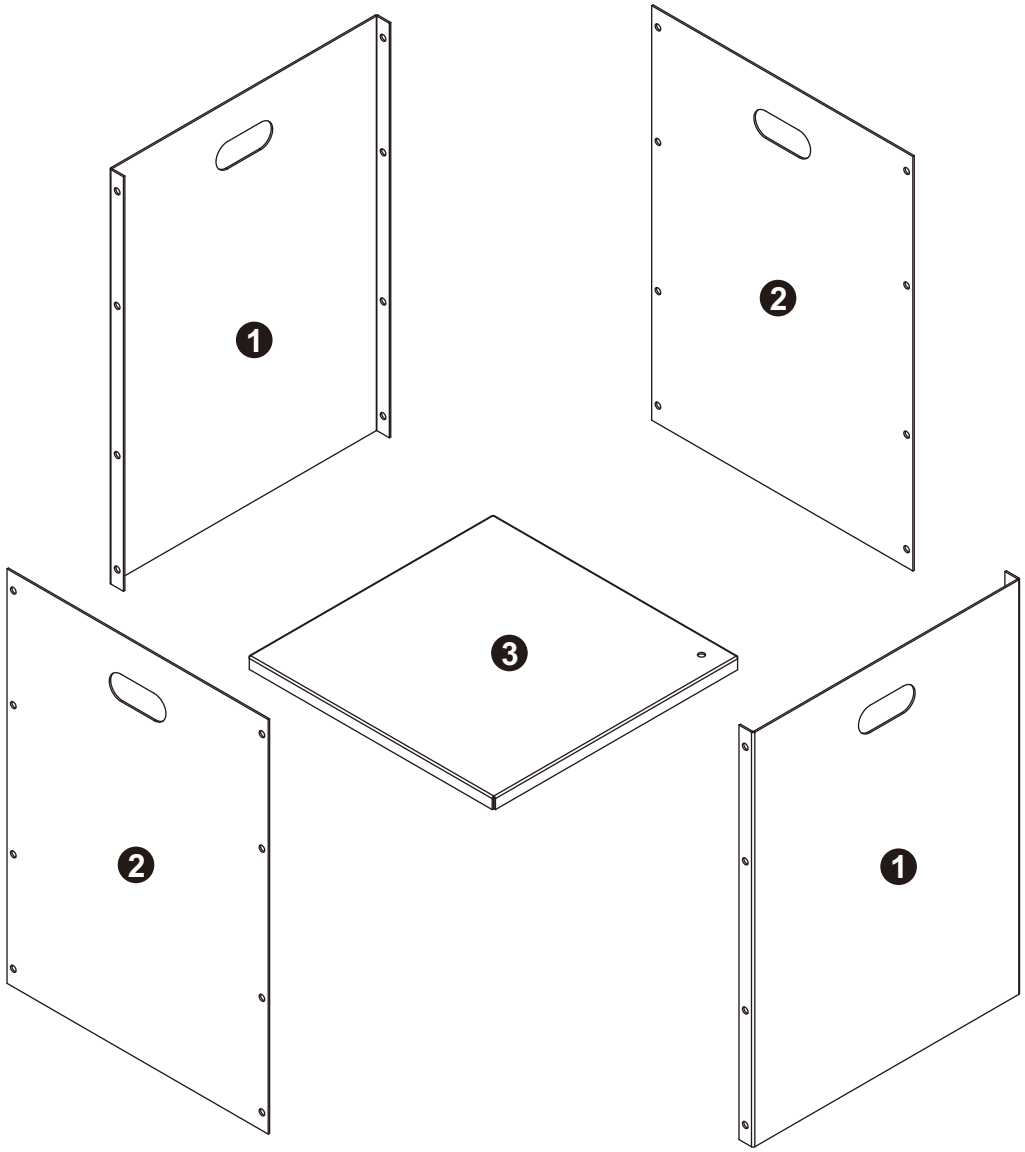

1 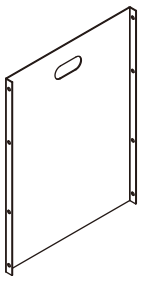 2pcs	2 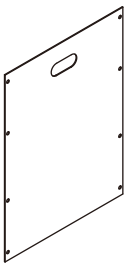 2pcs	3 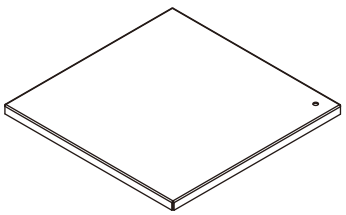 1pc
A  M6x12mm 16pcs	B 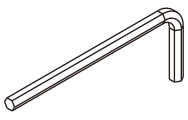 1pc	

1

A	M6x12mm	x8

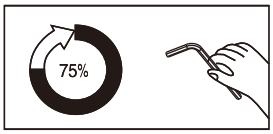

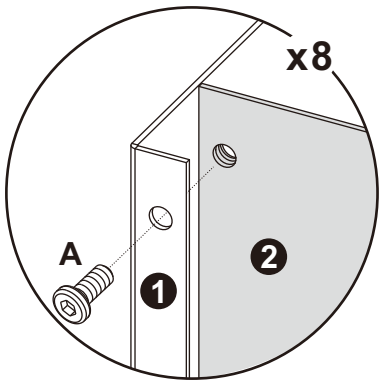

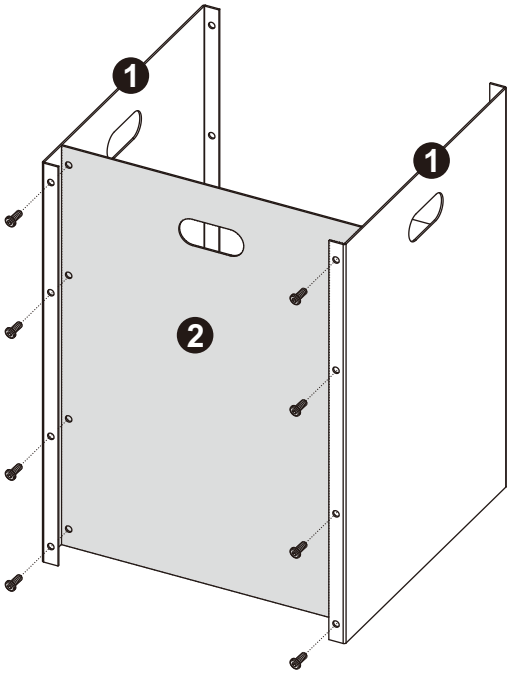

2

A	M6x12mm	x8

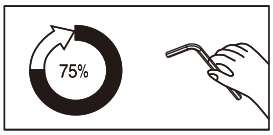

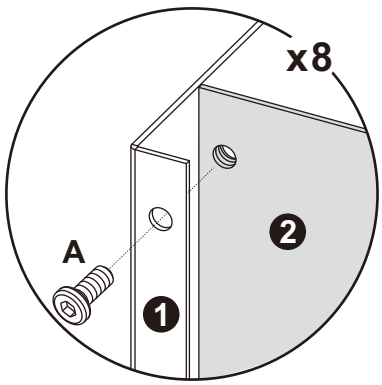

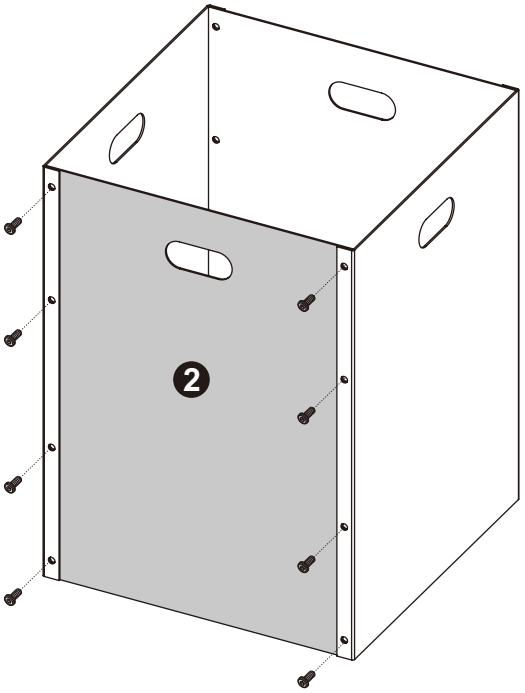

3

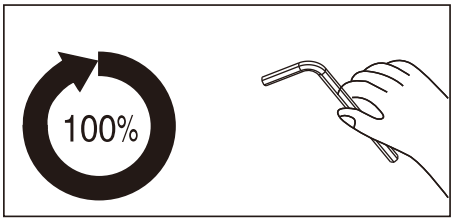

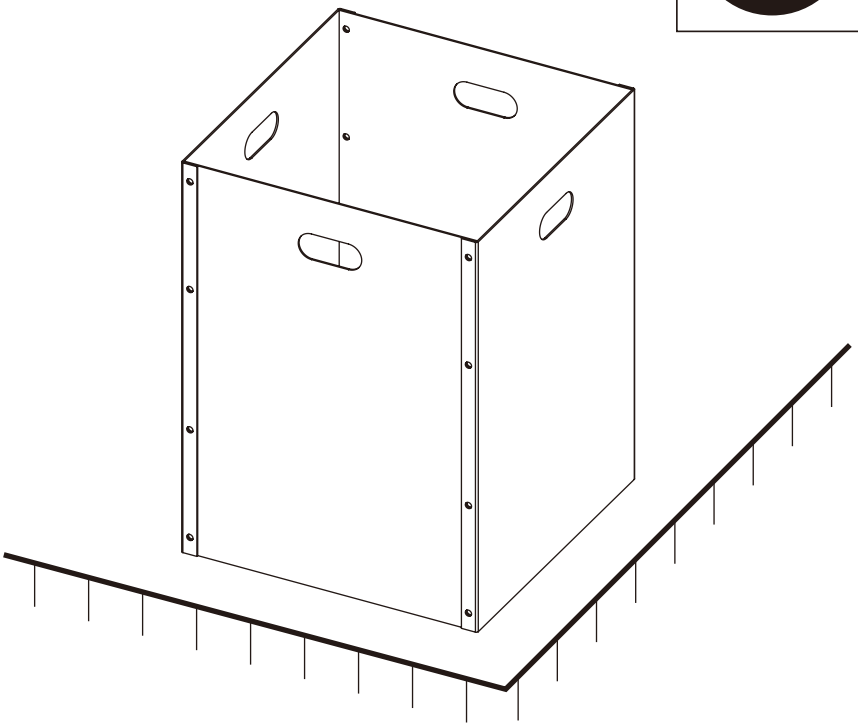

4

