CABINET

Assembly Instructions - Please keep for future reference

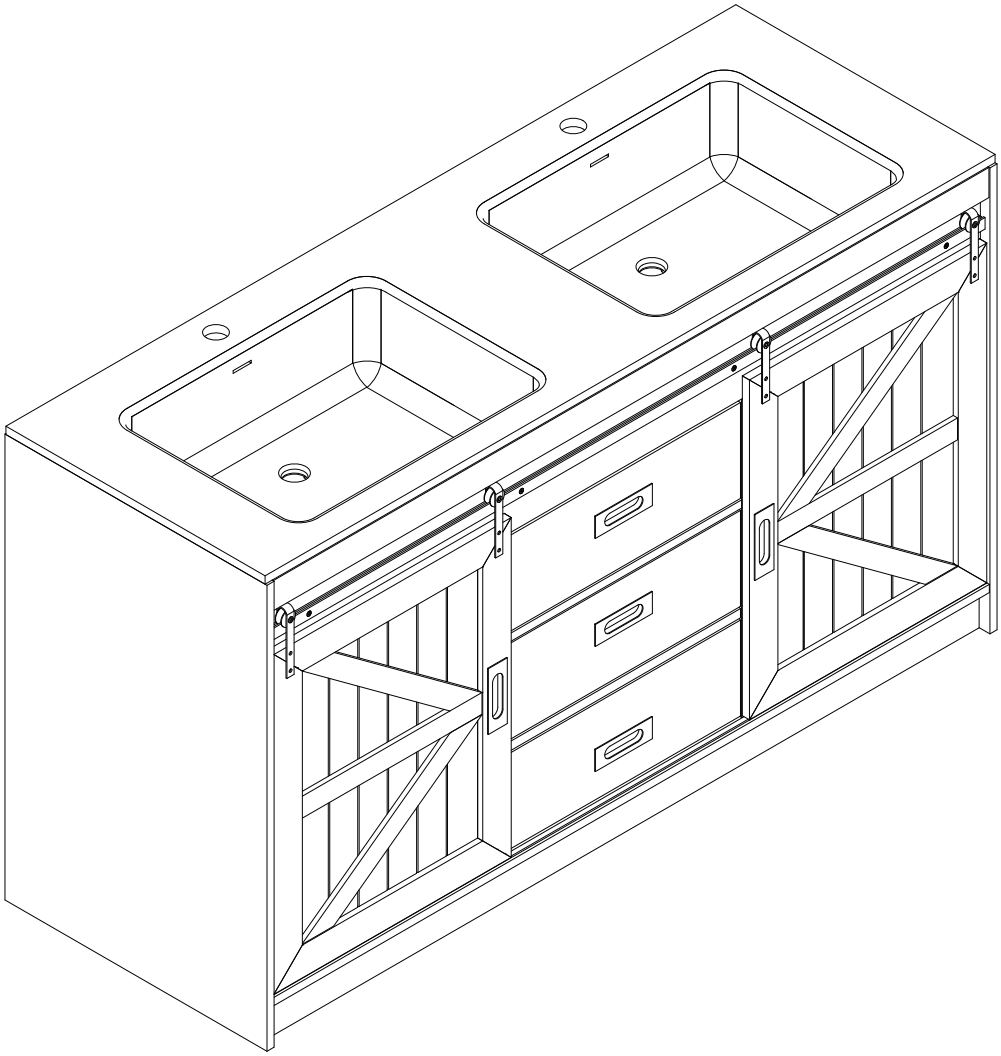

Dimensions

Width - 60.6inch
Depth - 21.7inch
Height - 33.5inch

Important – Please read these instructions fully before starting assembly

Issue 1 - 25/03/2024

Safety and Care Advice

Important – Please read these instructions fully before starting assembly

• Check you have all the components and tools listed on the following pages.

• Remove all fittings from the plastic bags and separate them into their groups.

• Keep children and animals away from the work area, small parts could choke if swallowed.

• Make sure you have enough space to layout the parts before starting.

• During assembly do not stand or put weight on the product, this could cause damage.

• Assemble the item as close to its final position (in the same room) as possible.

• Assemble on a soft level surface to avoid damaging the unit or your floor.

• Parts of the assembly will be easier with 2 people.



• To reduce the likelihood of damaging your product please ensure that your power drill is set on a low torque setting.

Care and maintenance

• Only clean using a damp cloth and mild detergent, do no use bleach or abrasive cleaners.

• From time to time check that there are no loose screws on this unit.

• This product should not be discarded with household waste. Take to your local authority waste disposal centre.

Handy Hints

• Assemble all parts and bolts loosely during assembly, only once the product is complete should you fully tighten the bolts

• Regularly check and ensure that all bolts and fittings are tightened properly.

WARNING

In order to help prevent overturning – please follow these instructions

To help prevent product toppling over please follow the below steps:-

Use the anti tip strap or wall fixing method provided (if applicable)
Do not allow children to climb or hang on the furniture
Do not open more than one drawer at a time
Do not place heavy items in the top drawers
Do not place heavy items on top of the furniture, unless the furniture has been designed for this purpose

Please note that only the anti tip strap is provided.
You will need to provide wall plugs and screws applicable for your wall type

Components - Fittings

Please check you have all the fittings listed below

Note: The quantities below are the correct amount to complete the assembly. In some cases more fittings may be supplied than are required.

A  Cam Bolt x 34	**B**  Cam Lock x 34	**C**  Wooden Dowel x 30
D  3.5*14mm Screw x 28	**E** 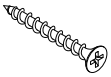 5*40mm Screw x 16	**F**  4*14mm Screw x 12
G  6*30mm Bolt x 4	**H** 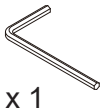 Allen Key x 1	**I**  Wall Fixing Pack x 4
J  Protective Foot x 6	**K**  Screw and plastic cap x 4	**L** 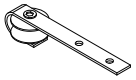 Pulley x 4
M 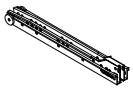 Drawer slide x 2	**N** 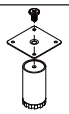 Adjustable Foot(Hx75mm) x 1	**O**  L shape bracket x 2

Tools required



Phillips screwdriver
(medium & large)

Ruler - Use this ruler to help correctly identify the screws

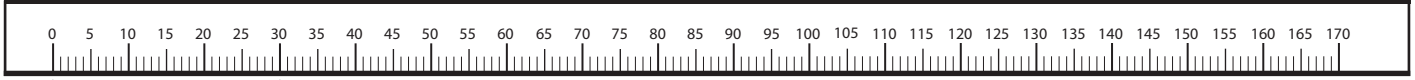

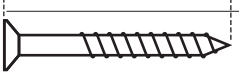

The screws length is measured from the head to the point (30mm screw shown).

Using Camlocks

Step 1

Connect the male camlock as directed in the assembly instructions using a screwdriver.

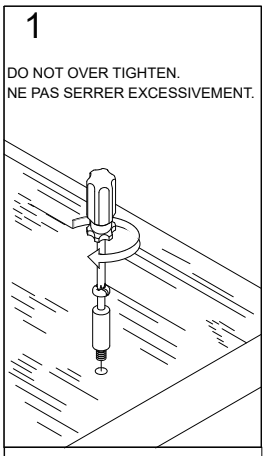

Step 2

Push the male camlock into the entry hole.

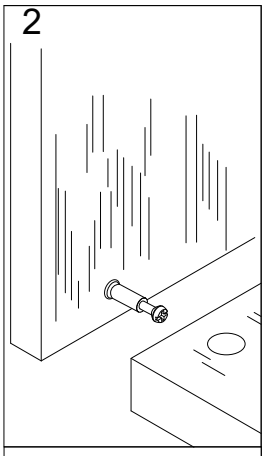

Step 3

Insert the female camlock as shown in the instructions.

Note: ensure that the arrow on the top of the camlock points towards the entry hole for the male camlock.

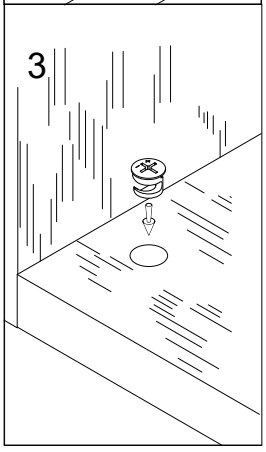

Step 4

Turn the female camlock clockwise with a screwdriver.

You should feel a click when the camlock is locked in place.

The joint is now secure.

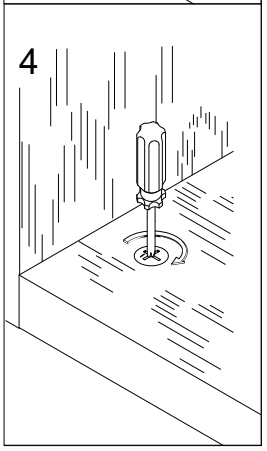

Components - Panels

Please check you have all the panels listed below

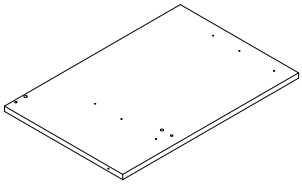

1 (39 x 58 x 1.5cm) x1

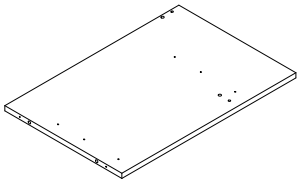

2 (39 x 58 x 1.5cm) x1

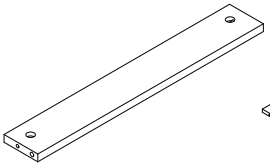

3 (7.5 x 50.1 x 1.5cm) x2

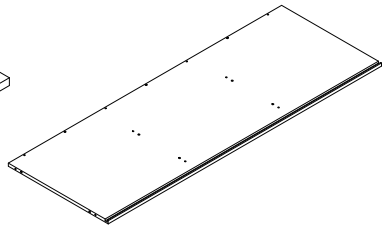

4 (55.1 x 150.8 x 1.5cm) x1

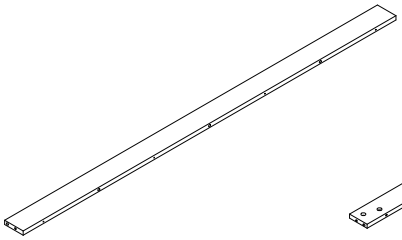

5 (7.5 x 150.8 x1.5cm) x1

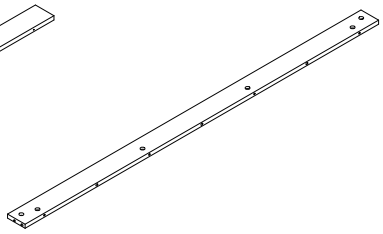

6 (7.5 x 150.8 x1.5cm) x1

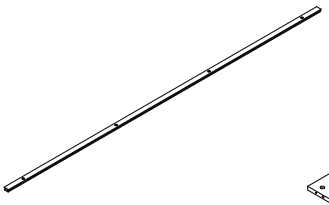

7 (150.4 x 2.5 x 1.5cm) x1

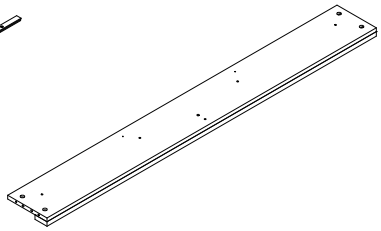

8 (18 x 150.8 x 3.3cm) x1

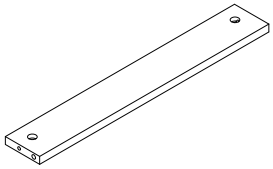

9 (7.5 x 50.1 x 1.5cm) x1

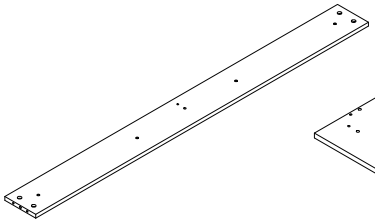

10 (14 x 150.8 x 1.5cm) x1

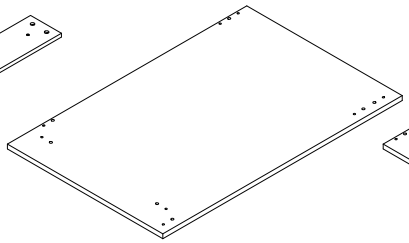

11 (55.2x 85 x 1.5cm) x1

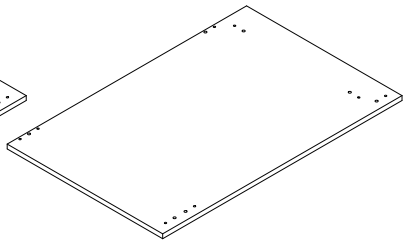

12 (55.2 x 85 x 1.5cm) x1

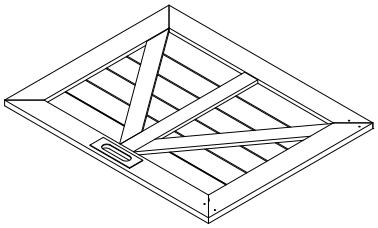

13 (50 x 63 x 1.5cm) x1

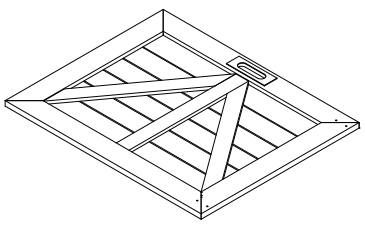

14 (50x 63 x 1.5cm) x1

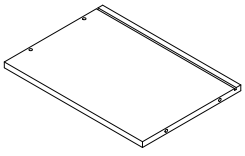

15 (23.5 x 33 x 1.2cm) x1

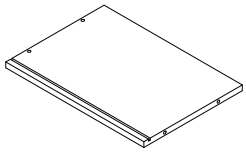

16 (23.5 x 33 x 1.2cm) x1

Components - Panels

Please check you have all the panels listed below

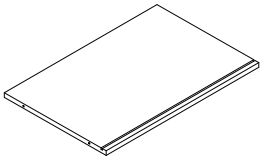

17 (23.5 x 45.2 x 1.2cm) x1

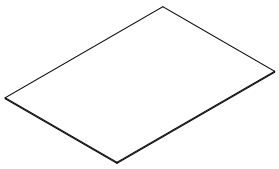

18 (32.5 x 46 x 0.27cm) x2

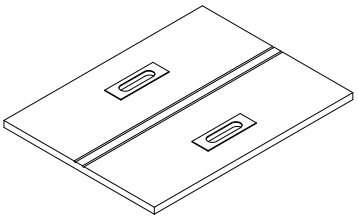

19 (37.5 x 49.5 x 1.5cm) x1

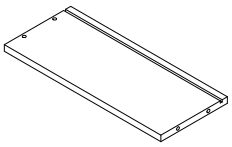

20 (14 x 33 x 1.2cm) x1

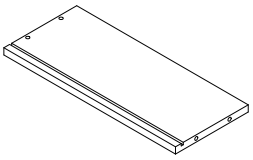

21 (14 x 33 x 1.2cm) x1

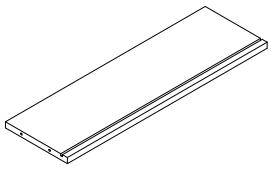

22 (14 x 45.2 x 1.2cm) x1

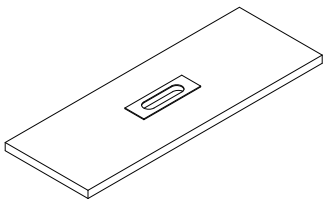

23 (17.5 x 49.5 x 1.5cm) x1

Assembly Instructions

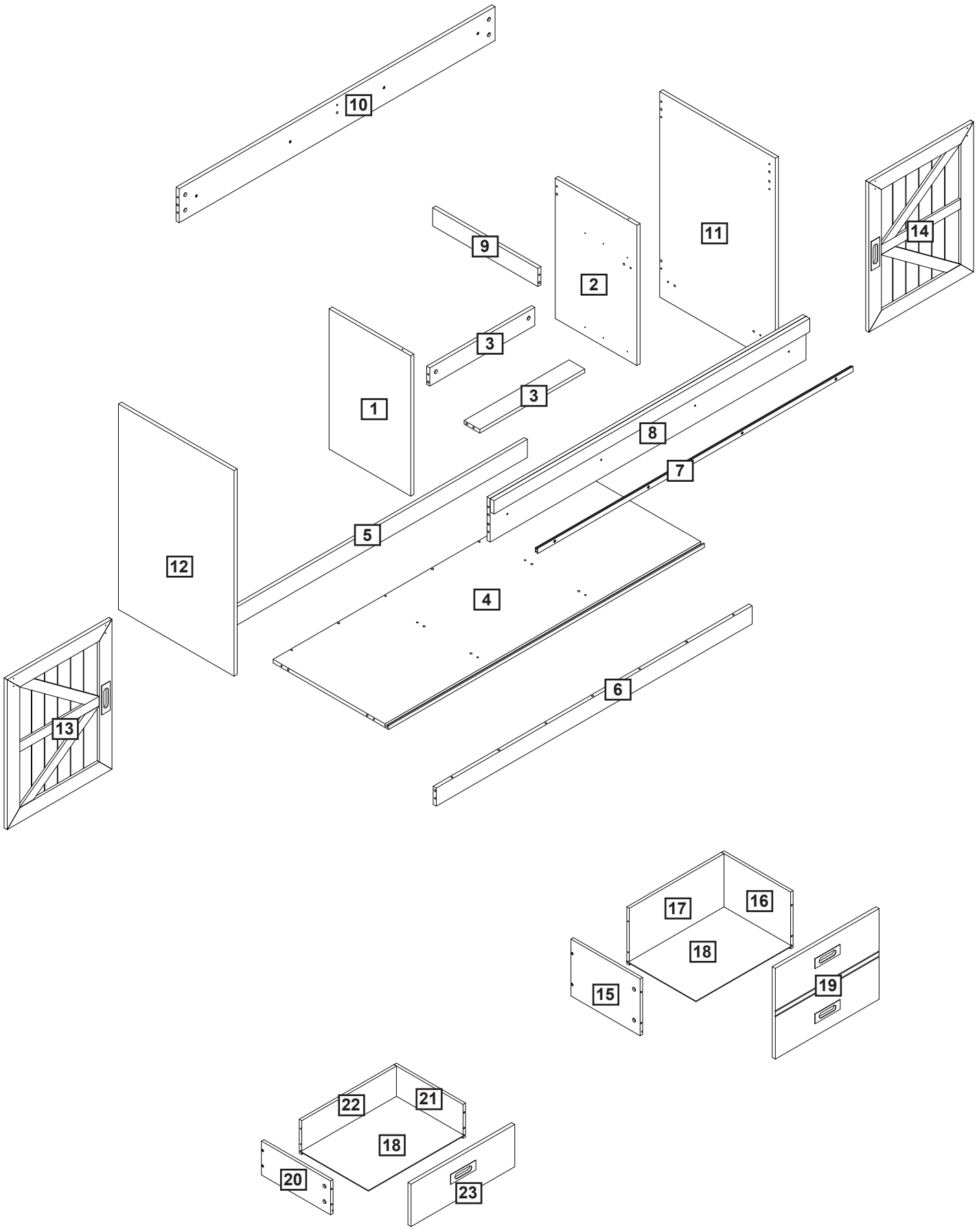

Assembly Instructions

Step 1

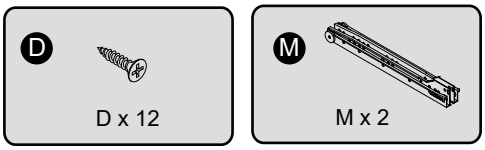

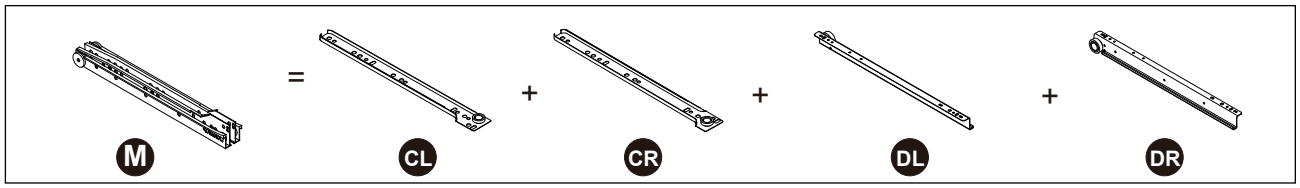

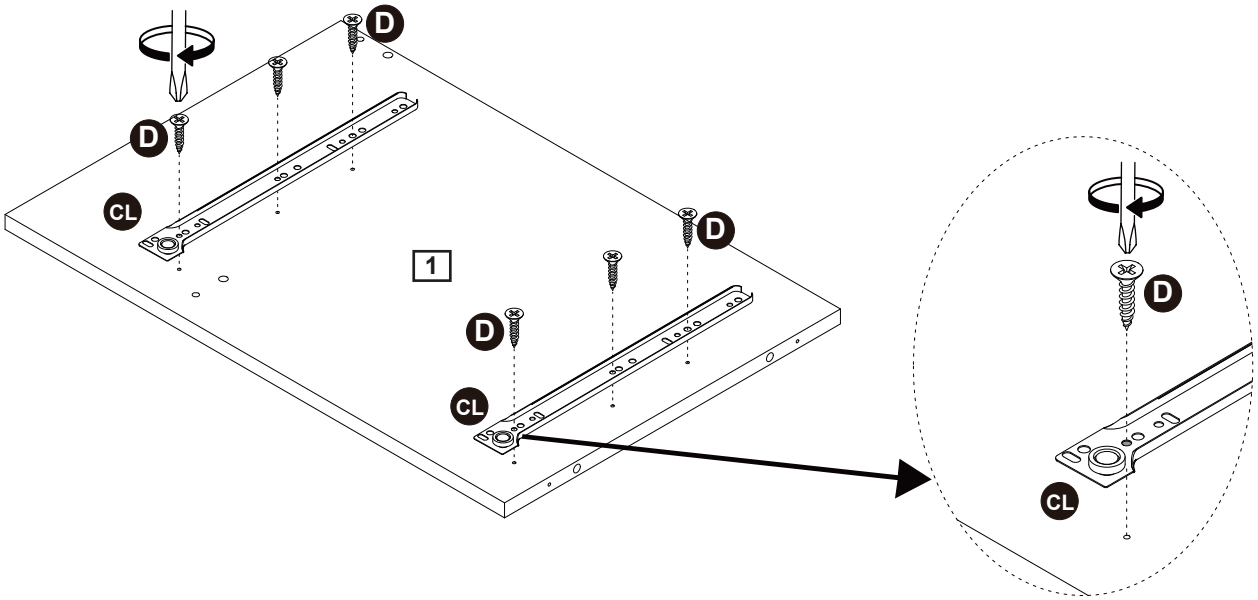

Use screw (D) to secure slide track (CL) to part (1) with a screwdriver.

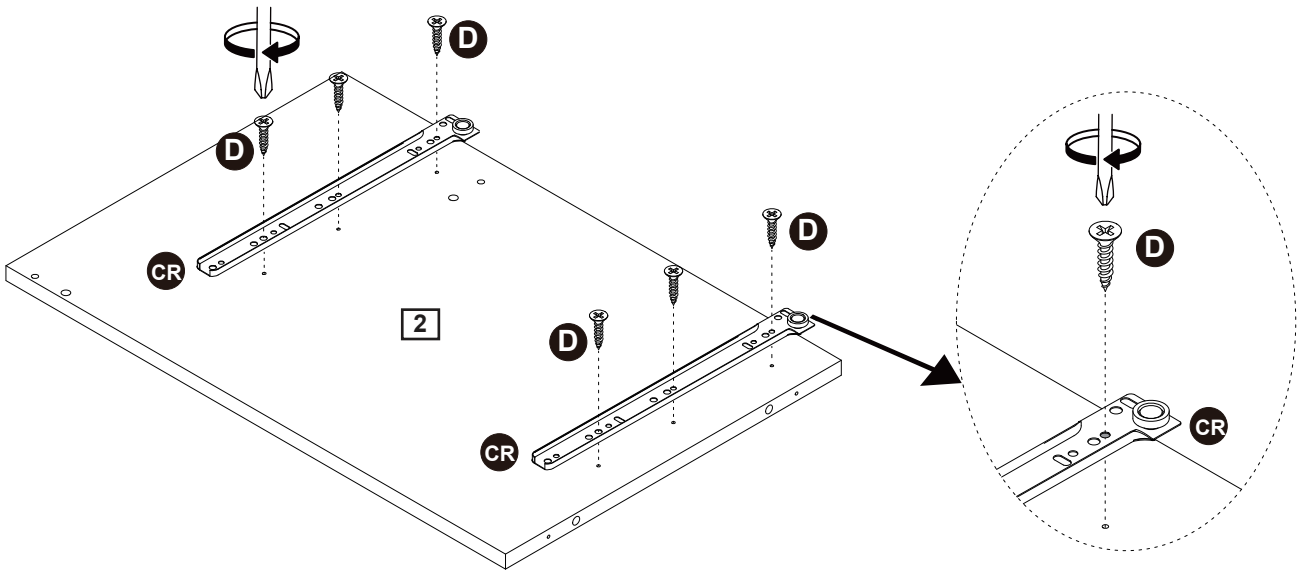

Use screw (D) to secure slide track (CR) to part (2) with a screwdriver.

Assembly Instructions

Step 2

CAM-LOCK
Tighten until shoulder is flush with panel.Do not overtighten or undertighten(see example below)

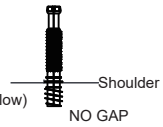

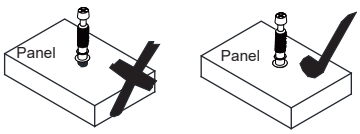

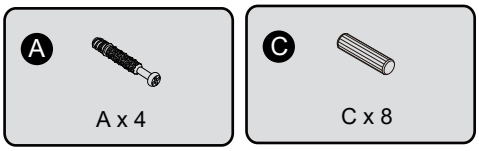

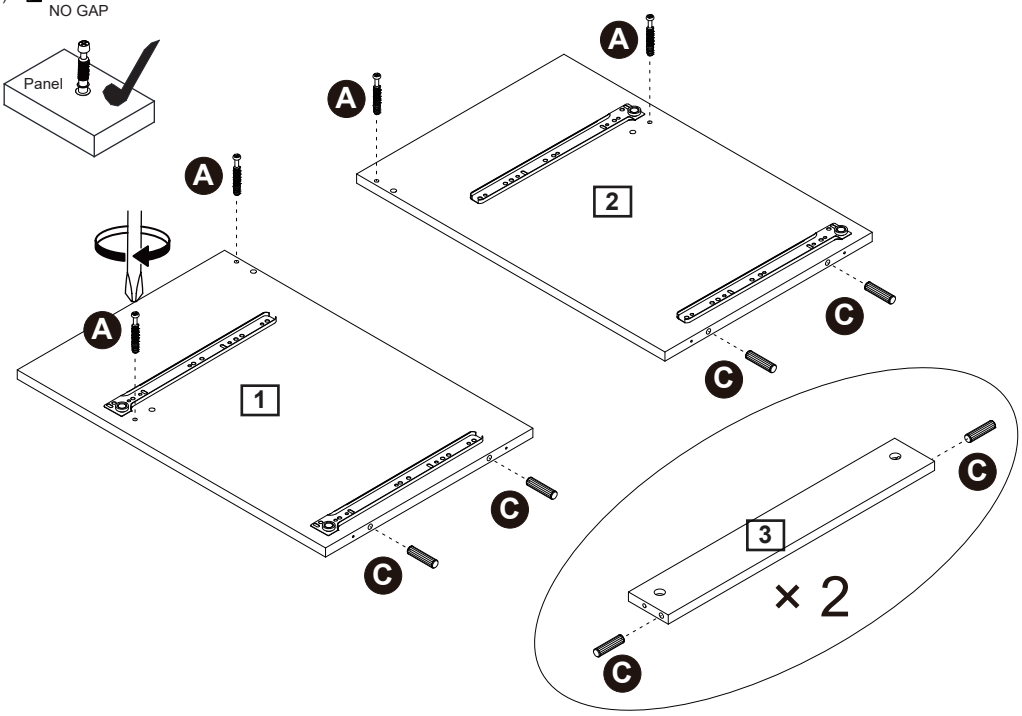

Attach cam bolt (A) to part (1, 2) with a screwdriver.
Insert wooden dowel (C) into part (1, 2, 3).

Step 3

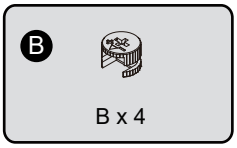

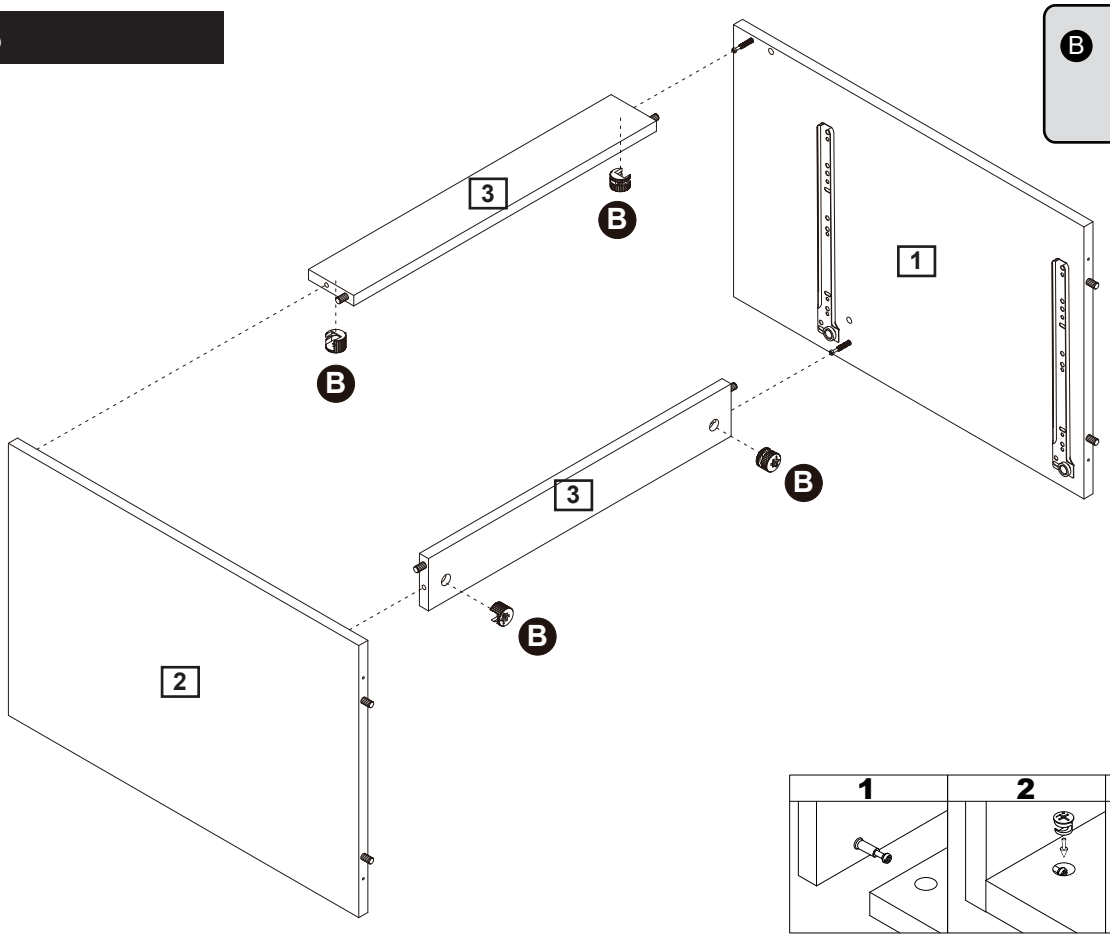

Attach part (1, 2) to part (3), then insert and secure cam lock (B) to part (3) to lock it.

Assembly Instructions

Step 4

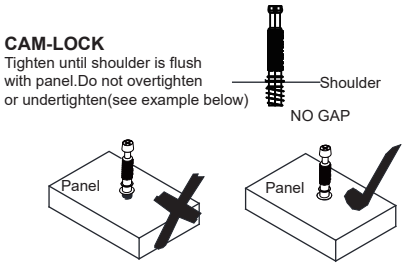

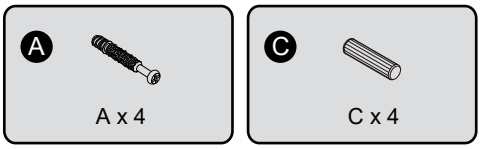

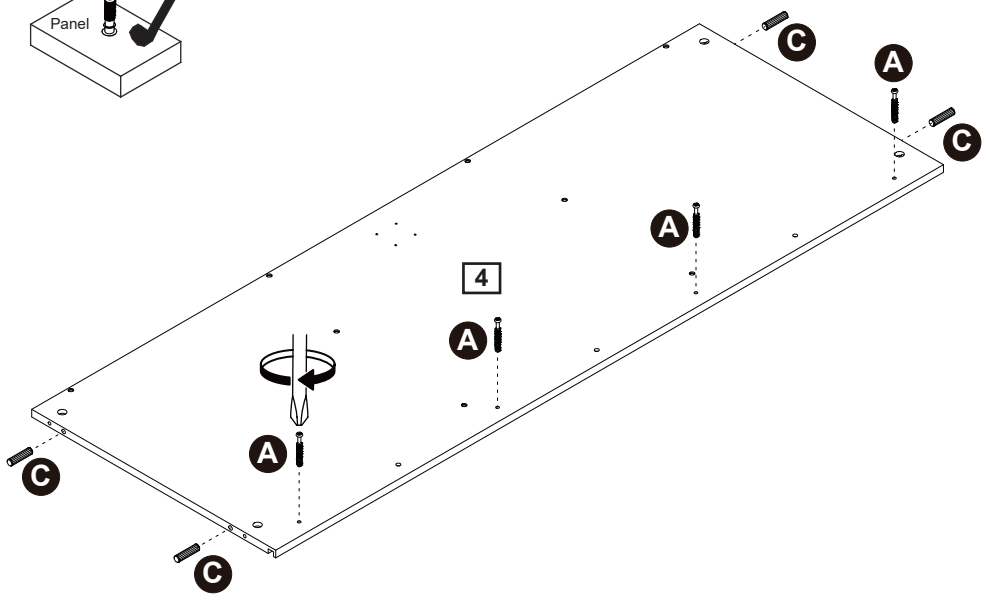

Attach cam bolt (A) to part (4) with a screwdriver.
Insert wooden dowel (C) into part (4).

Step 5

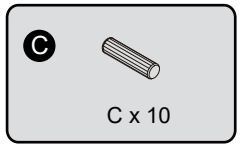

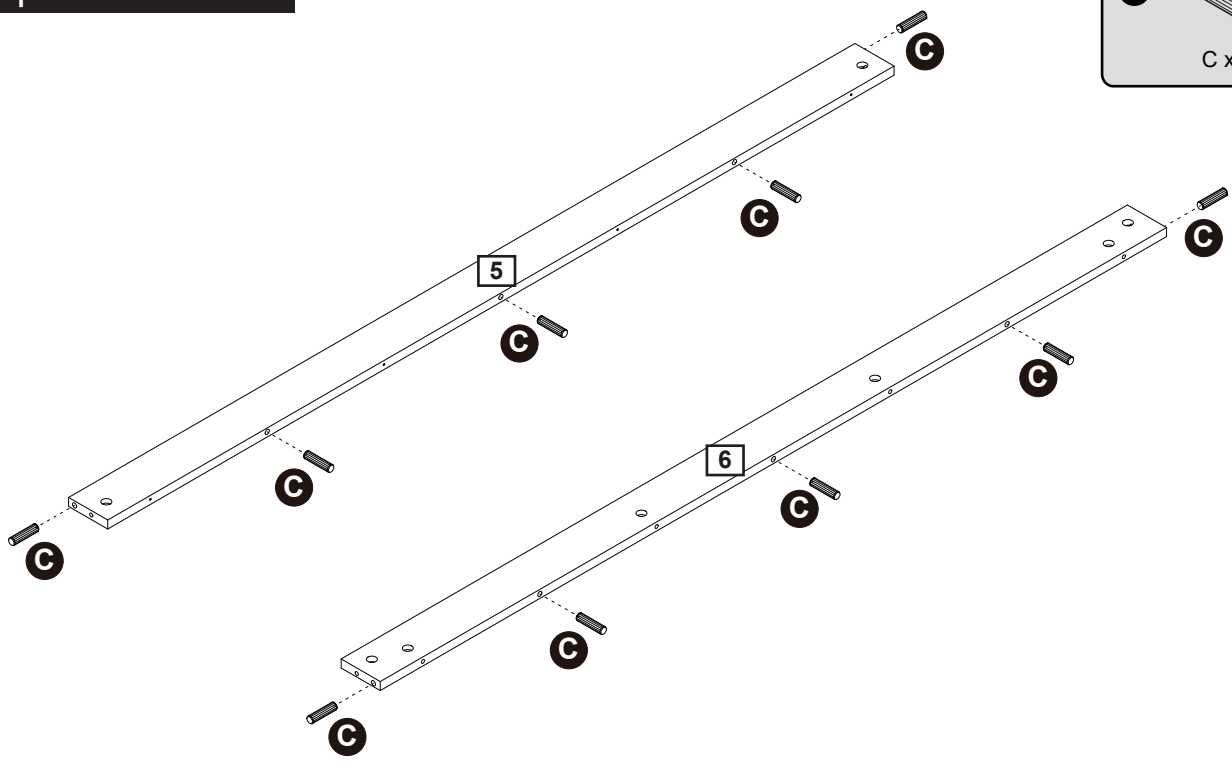

Insert wooden dowel (C) into part (5, 6).

Assembly Instructions

Step 6

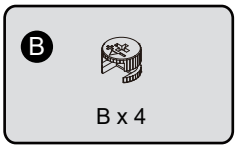

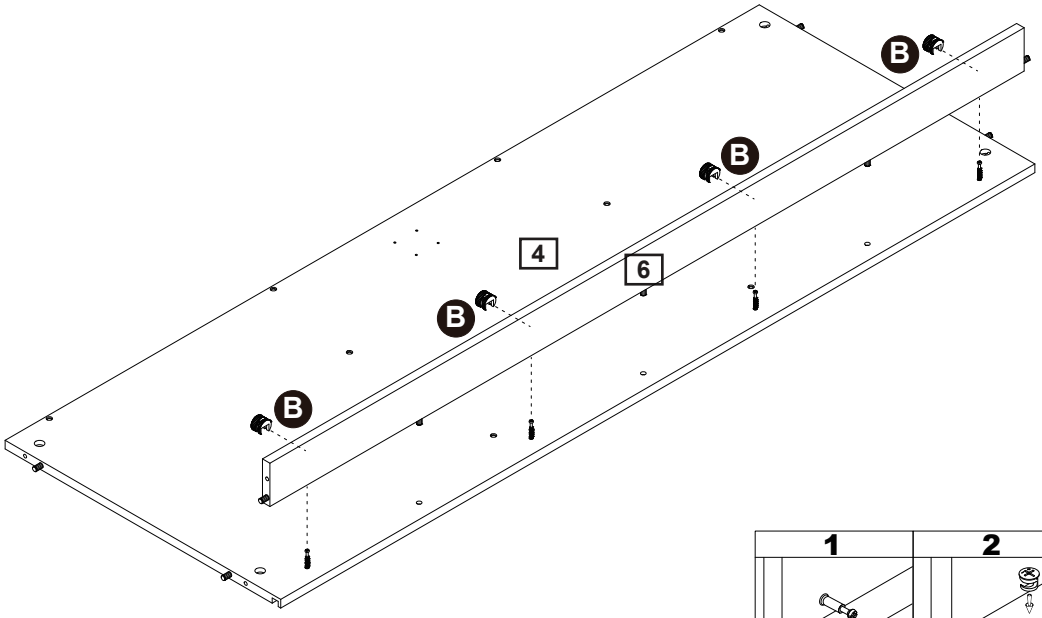

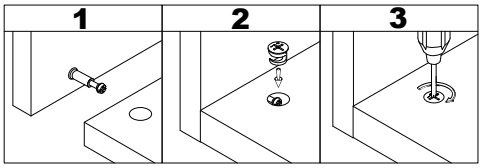

Attach part (6) to part (4), then insert and secure cam lock (B) to part (6) to lock it.

Step 7

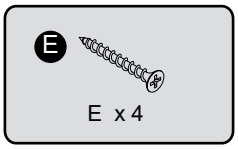

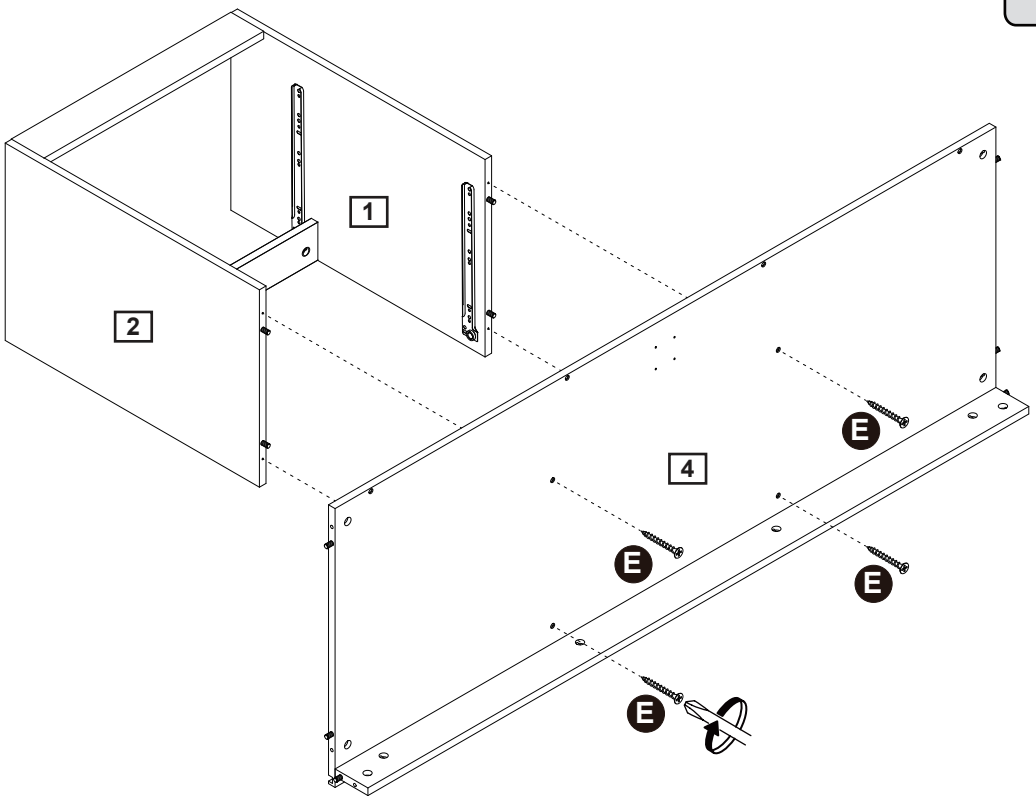

Attach part (1, 2) to part (4) using screw (E) with a screwdriver.

Assembly Instructions

Step 8

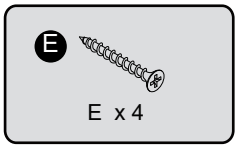

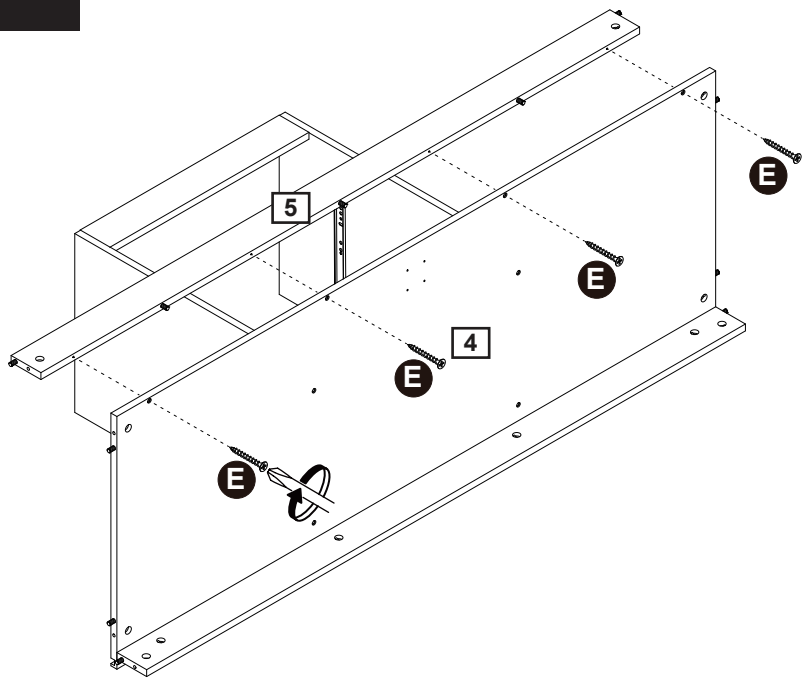

Attach part (5) to part (4) using screw (E) with a screwdriver.

Step 9

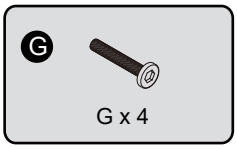

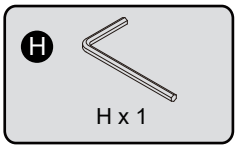

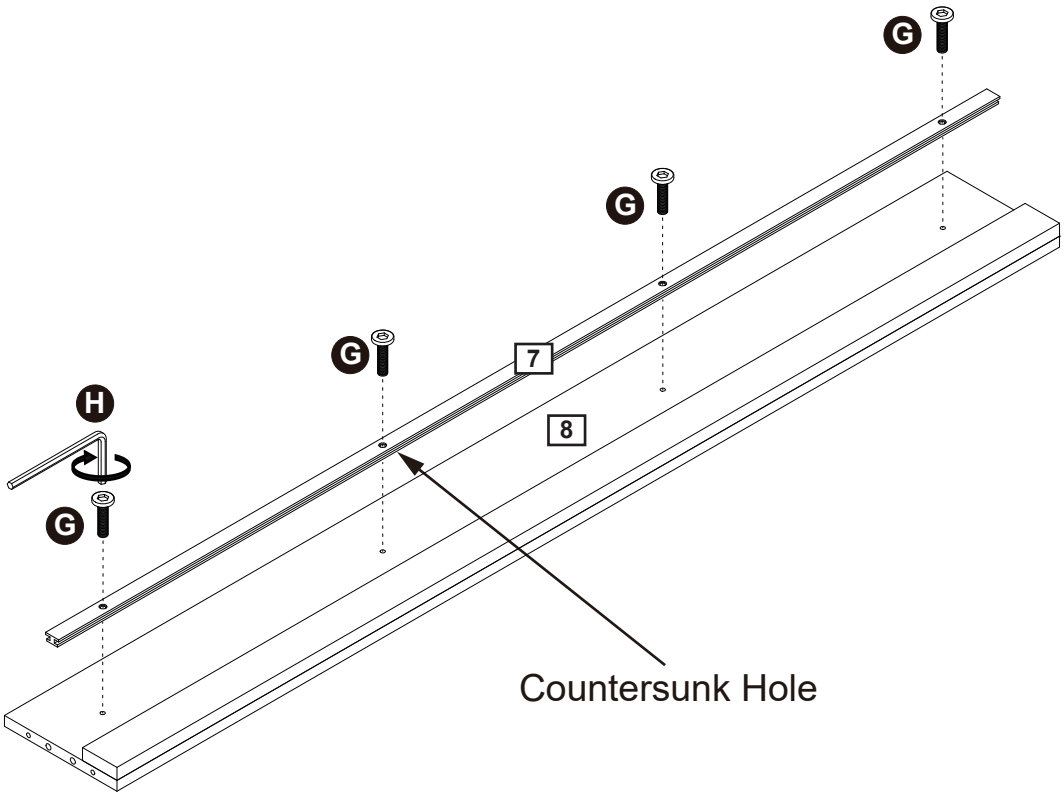

Attach part (7) to part (8) using bolt (G) with allen key (H).

Assembly Instructions

Step 10

CAM-LOCK
Tighten until shoulder is flush with panel.Do not overtighten or undertighten(see example below)

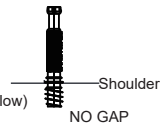

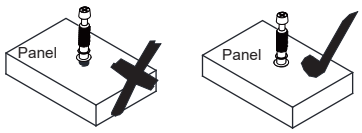

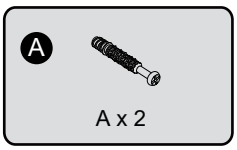

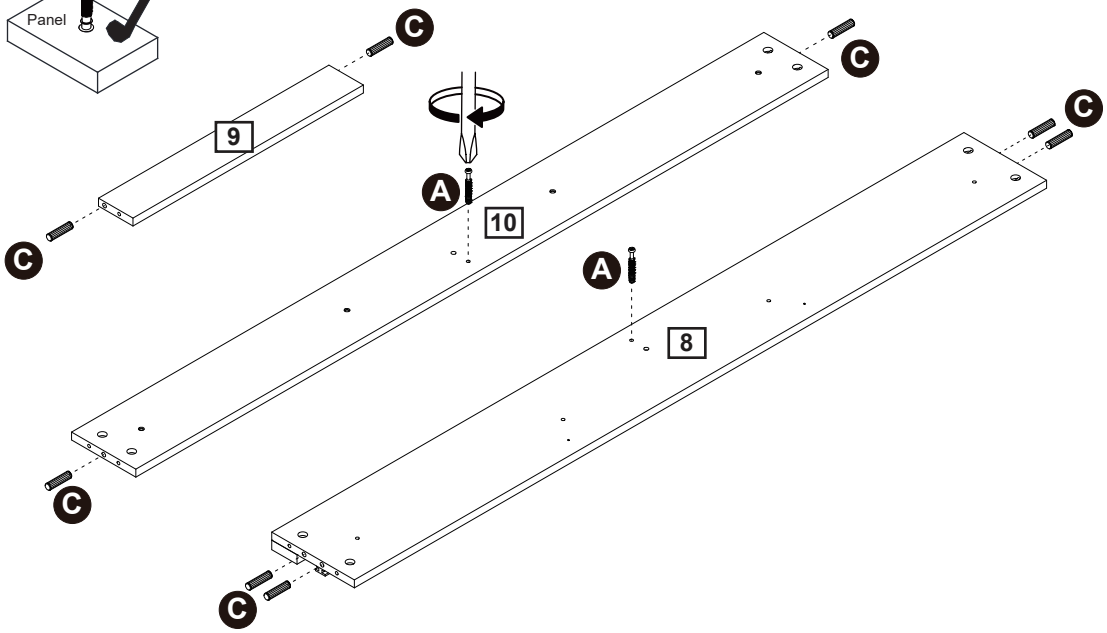

Attach cam bolt (A) to part (8, 10) with a screwdriver.
Insert wooden dowel (C) into part (8, 9, 10).

Step 11

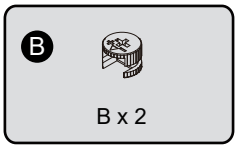

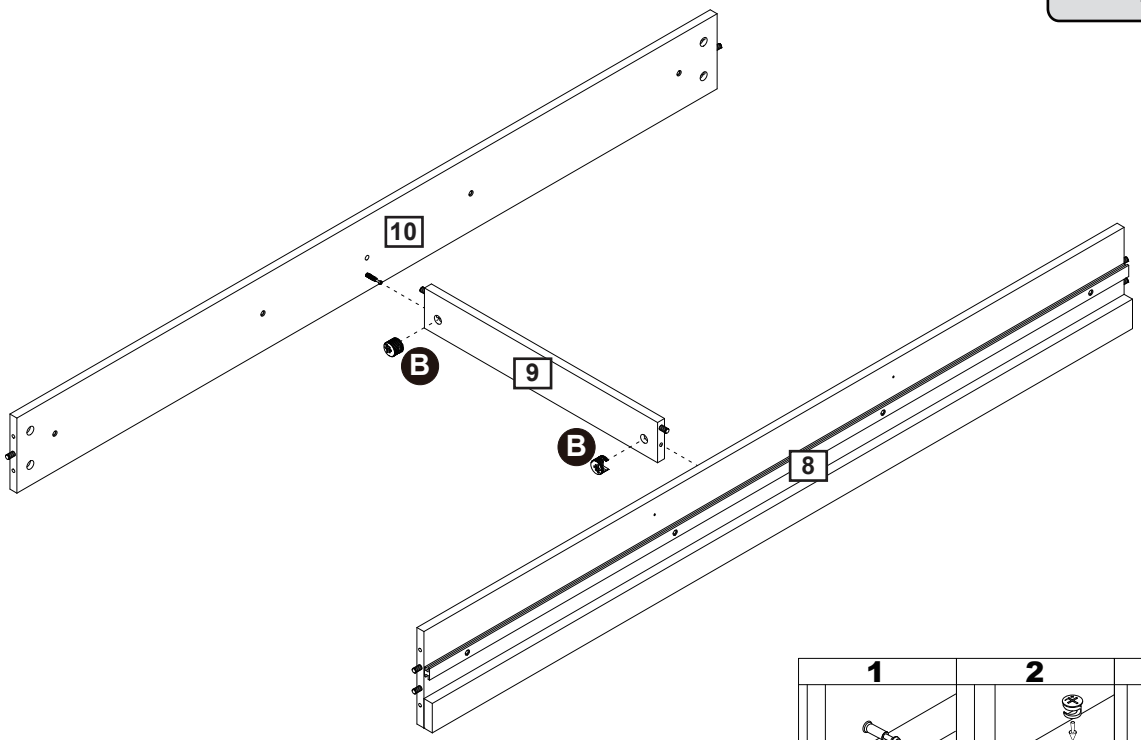

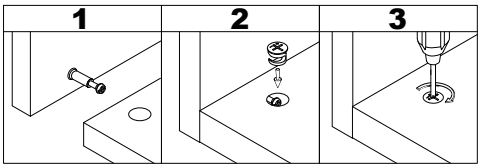

Attach part (8, 10) to part (9), then insert and secure cam lock (B) to part (9) to lock it.

Assembly Instructions

Step 12

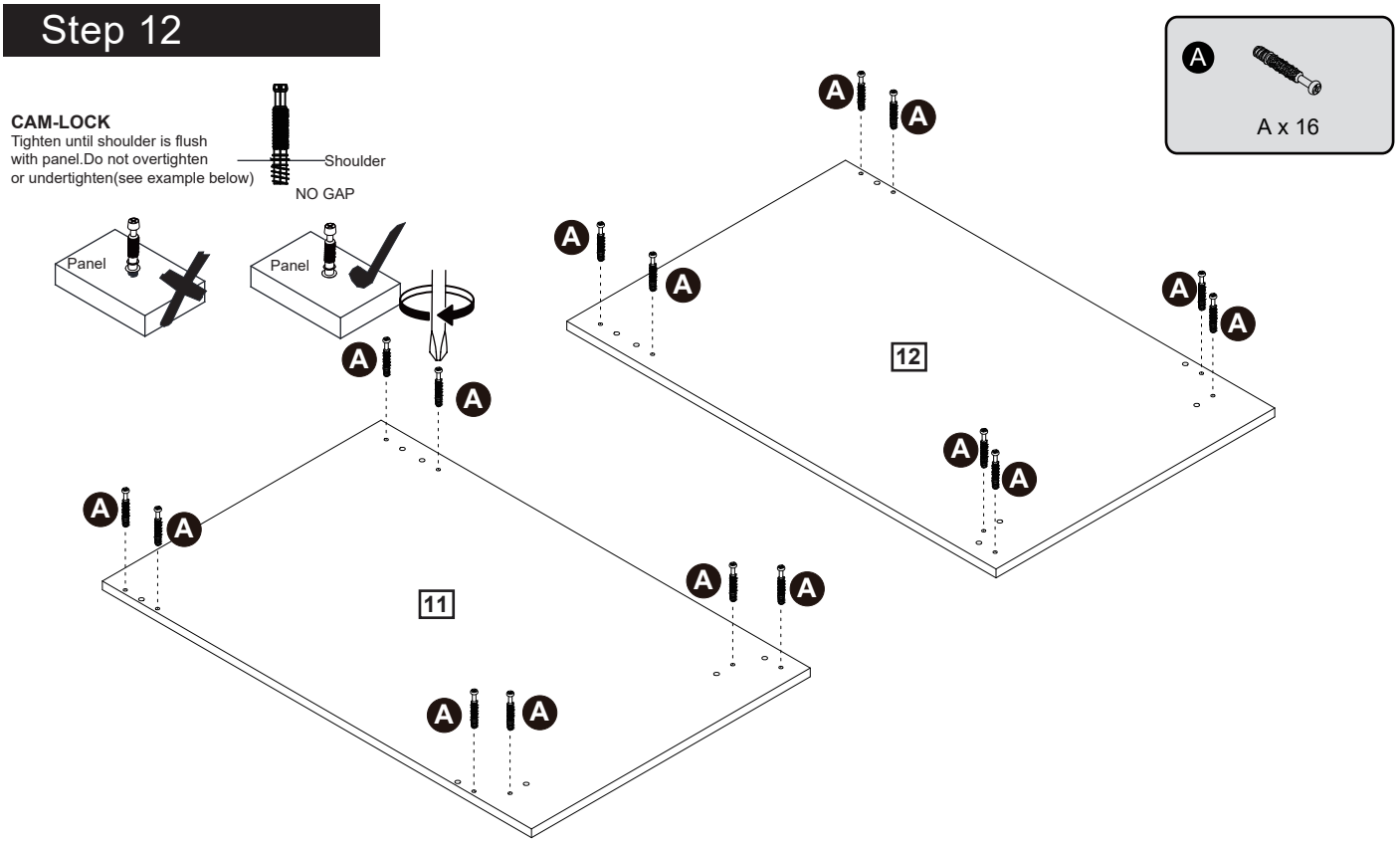

Attach cam bolt (A) to part (11, 12) with a screwdriver.

Step 13

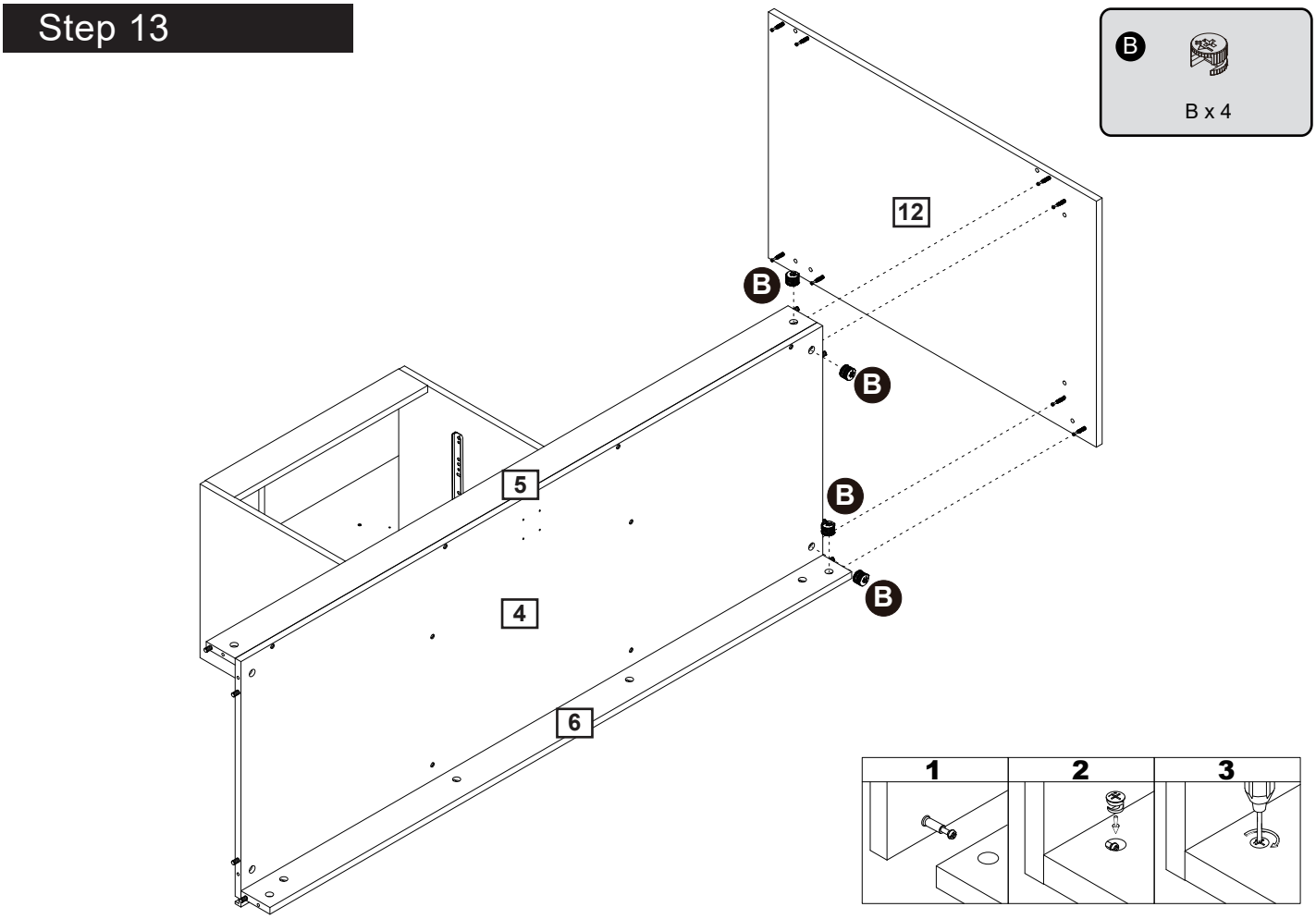

Attach part (12) to part (4, 5, 6), then insert and secure cam lock (B) to part (4, 5, 6) to lock it.

Assembly Instructions

Step 14

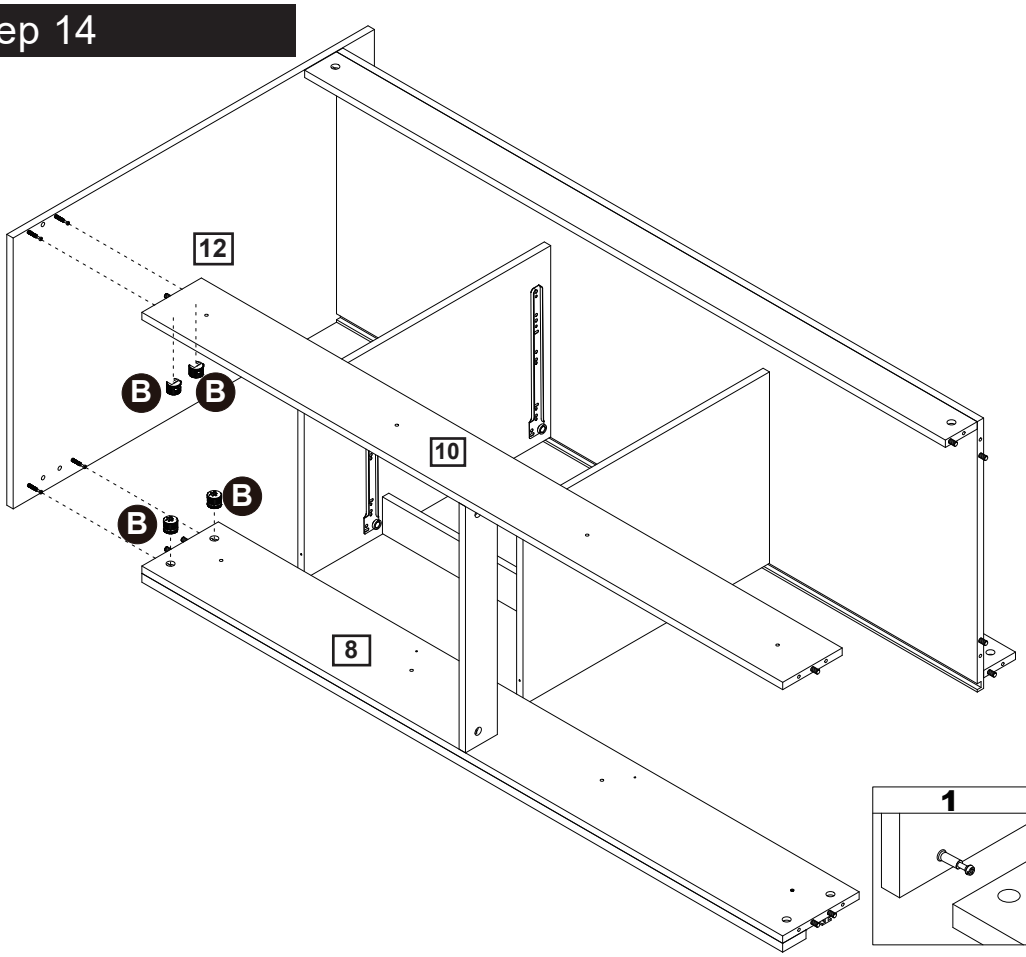

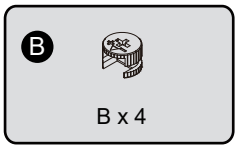

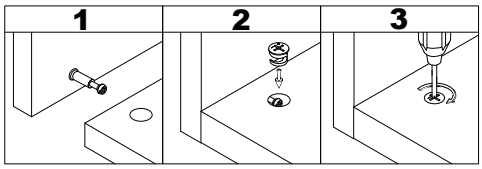

Attach part (8, 10) to part (12), then insert and secure cam lock (B) to part (8, 10) to lock it.

Step 15

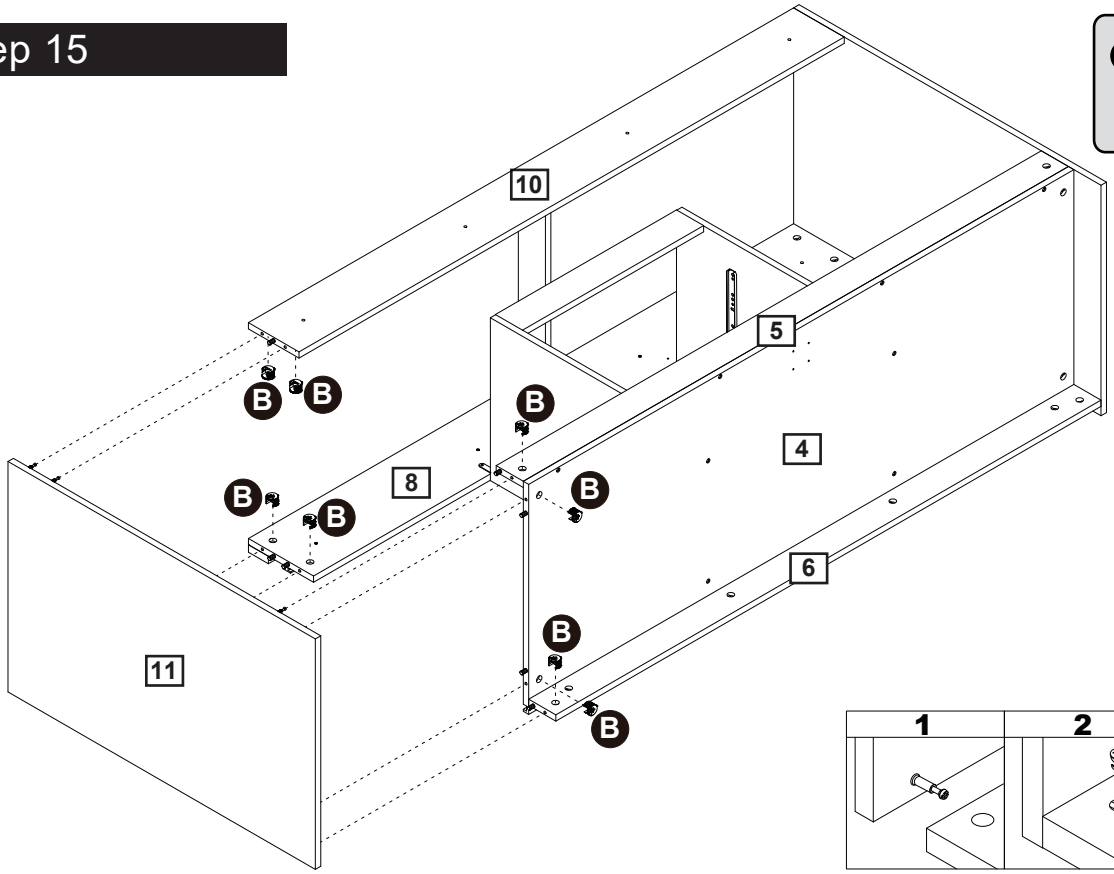

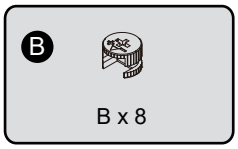

Attach part (11) to part (4, 5, 6, 8, 10), then insert and secure cam lock (B) to part (4, 5, 6, 8, 10) to lock it.

Assembly Instructions

Step 16

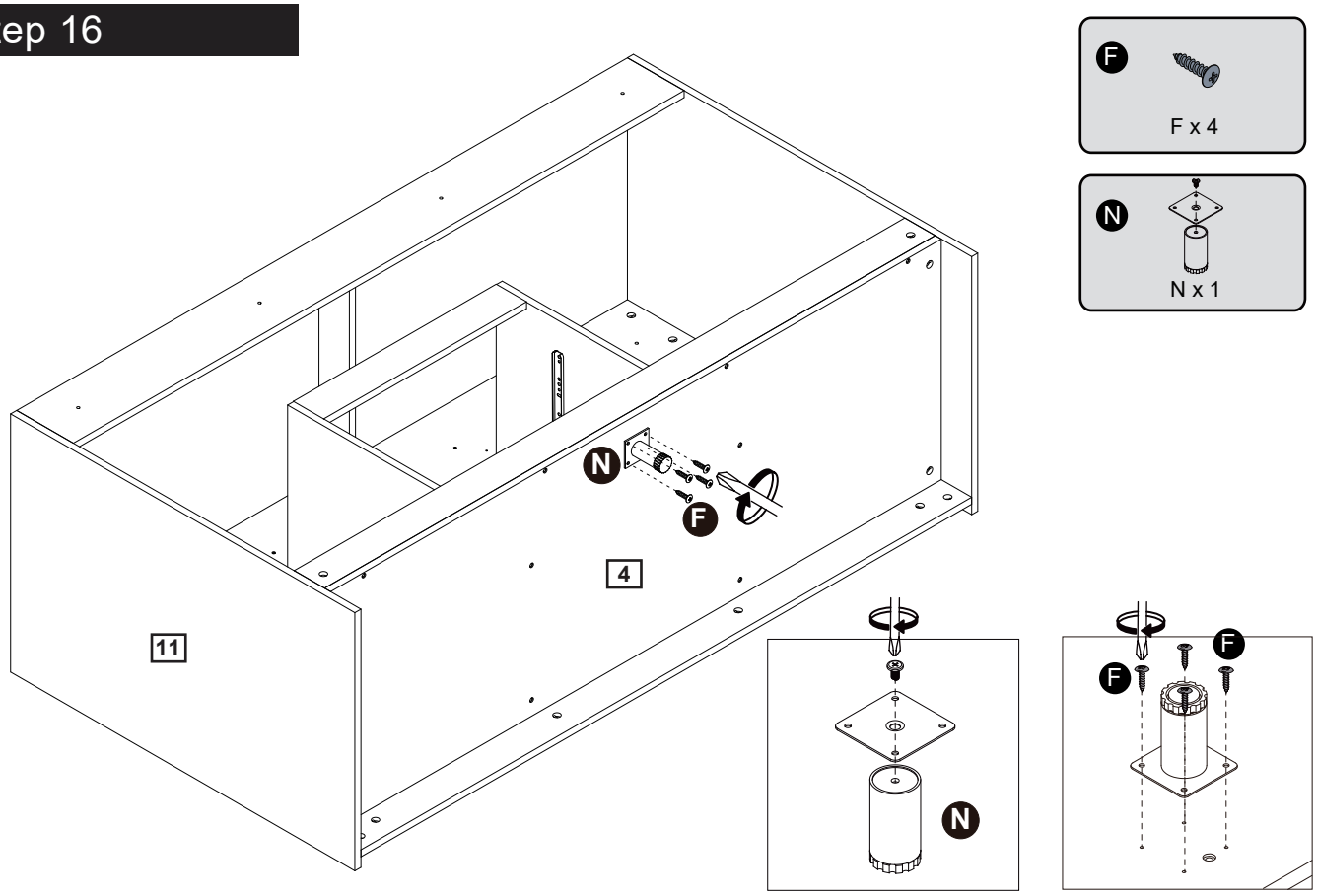

Attach adjustable foot (N) to part (4) using screw (F) with a screwdriver.

Step 17

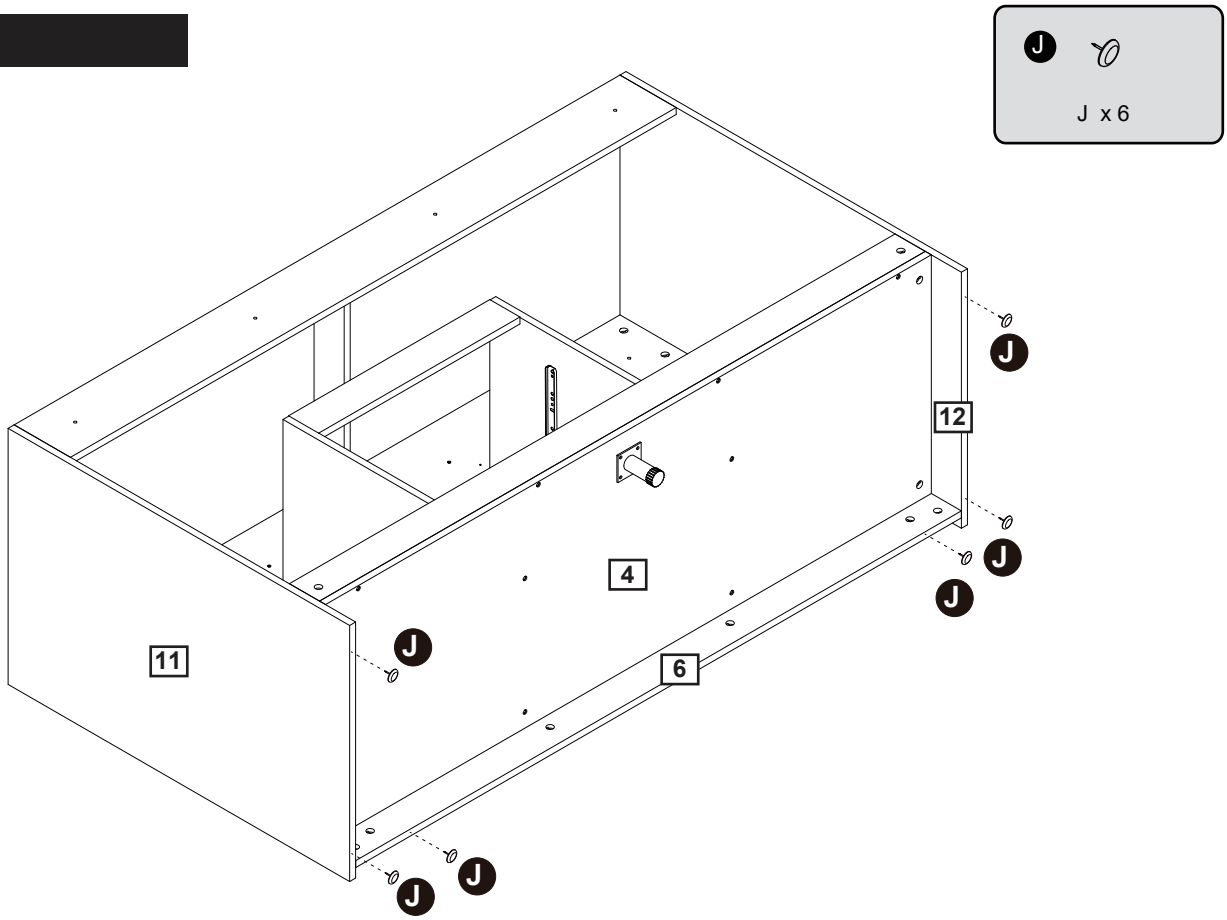

Insert protective foot (J) into part (6, 11, 12).

Assembly Instructions

Step 18

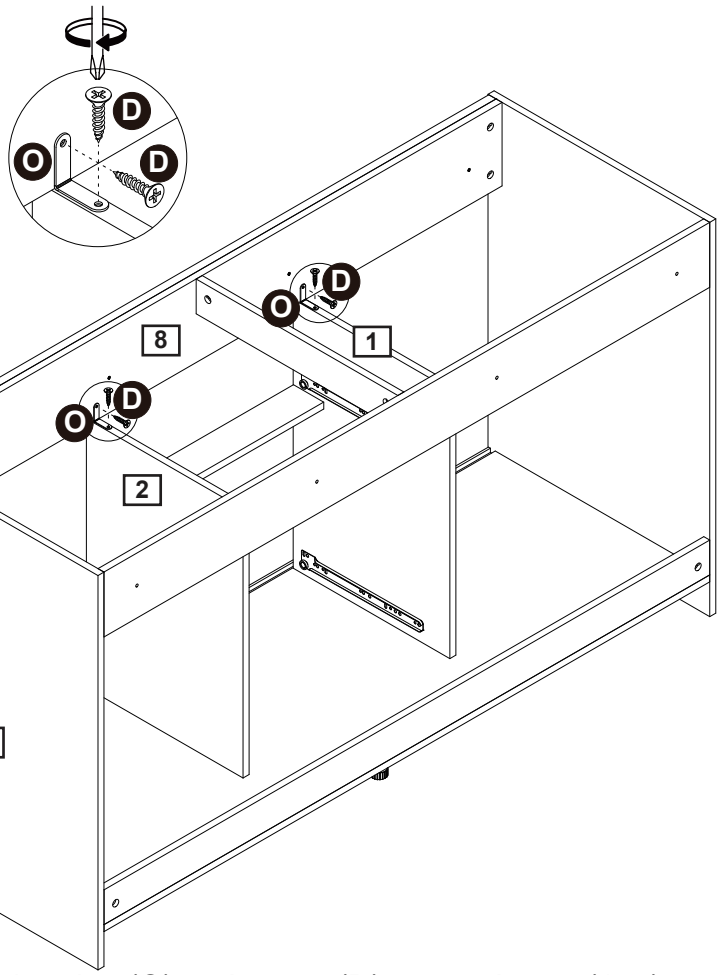

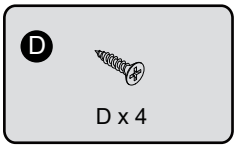

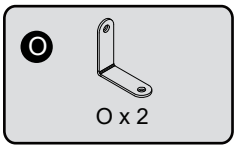

Use (L) shape bracket (O) and screw (D) to attach part (1, 2) to part (8).

Step 19

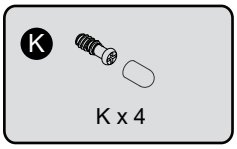

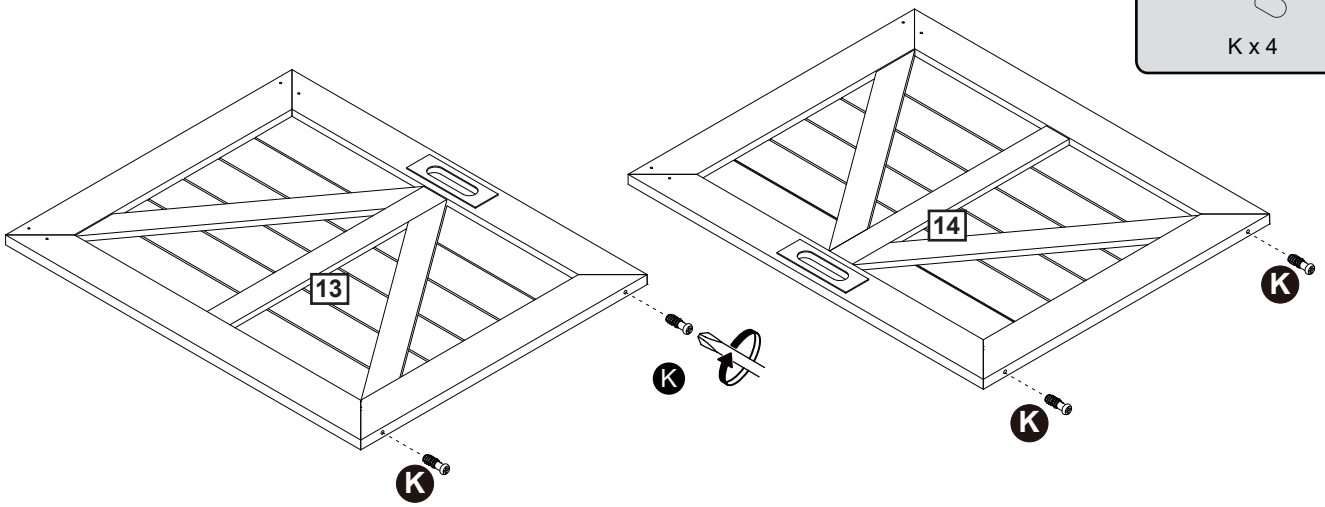

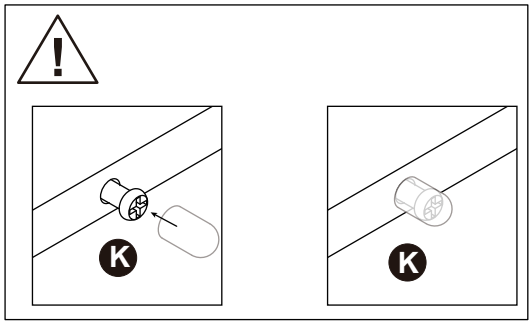

Attach screw and plastic cap (K) to part (13, 14) with a screwdriver.

Assembly Instructions

Step 20

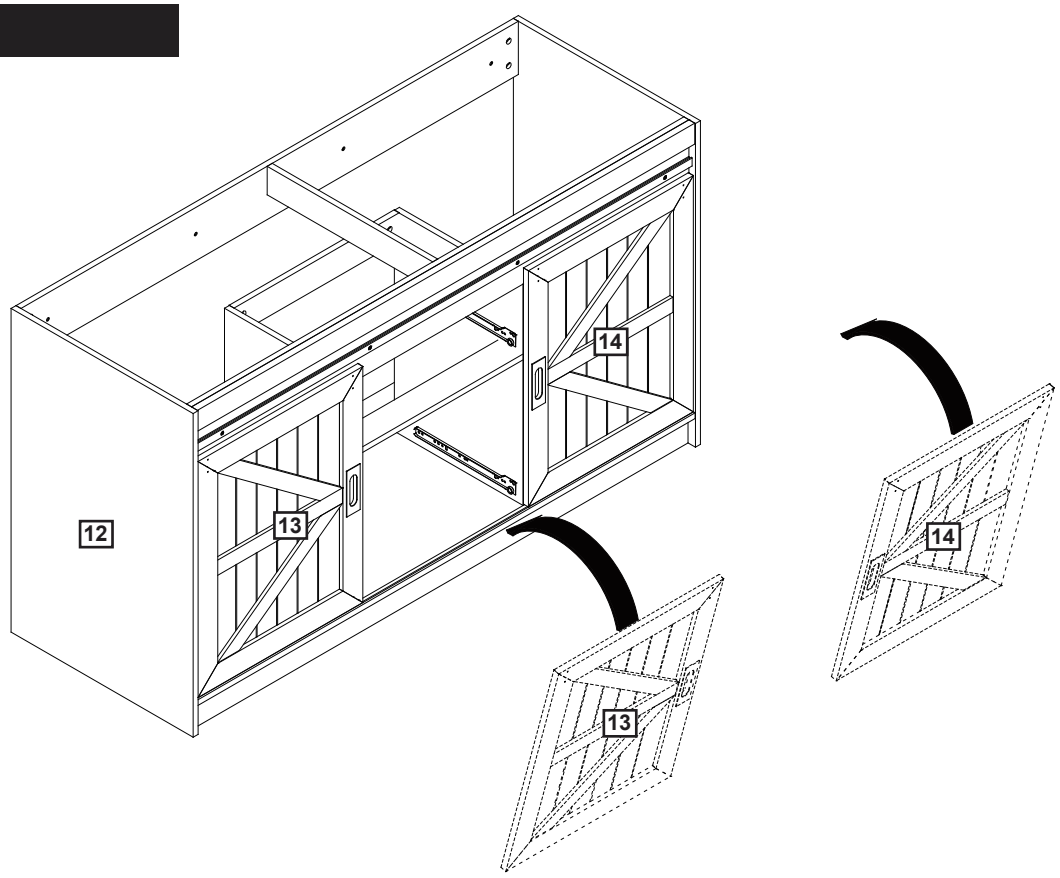

Place door (13, 14) on the track.

Step 21

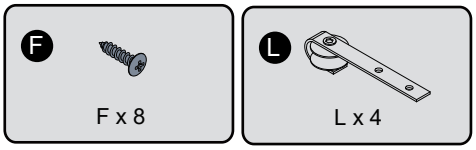

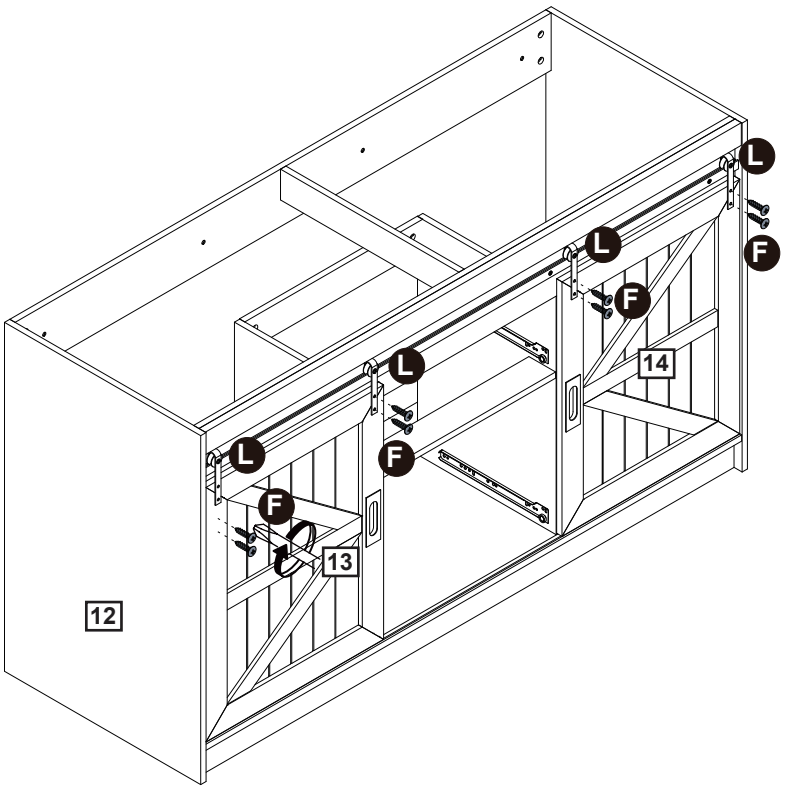

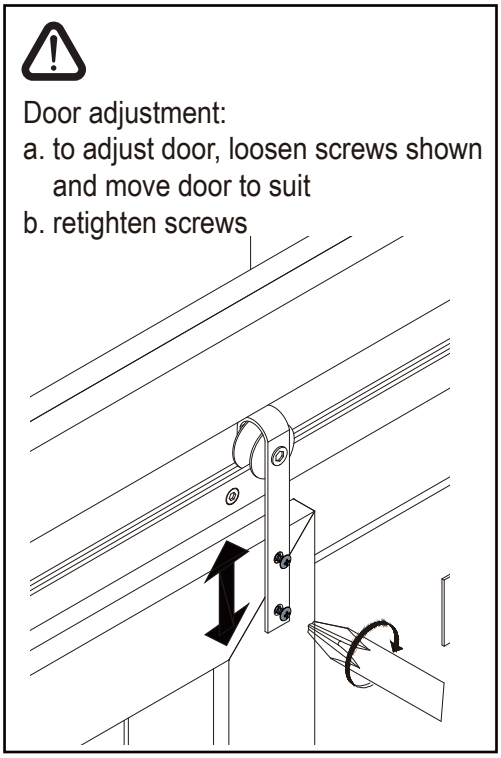

Place pulley (L) on the bar, and then attach pulley (L)to door (13, 14) using screw (F) with a screwdriver.

Assembly Instructions

Step 22

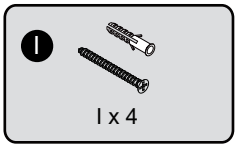

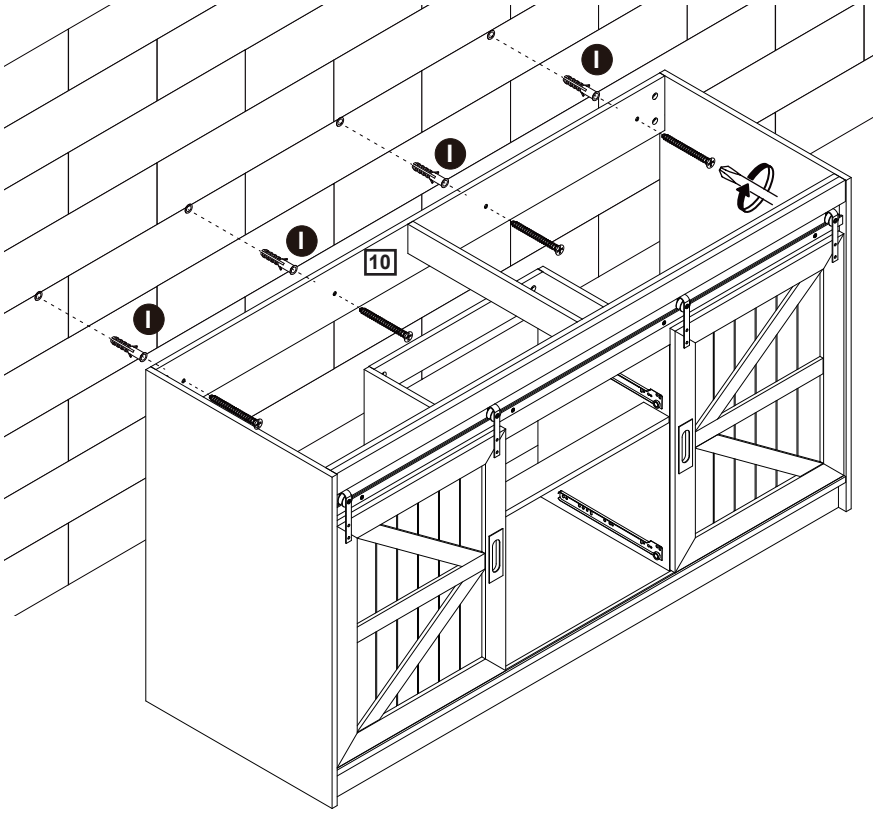

Secure vanity to the wall by using appropriate wall plus and screw(I).

Step 23

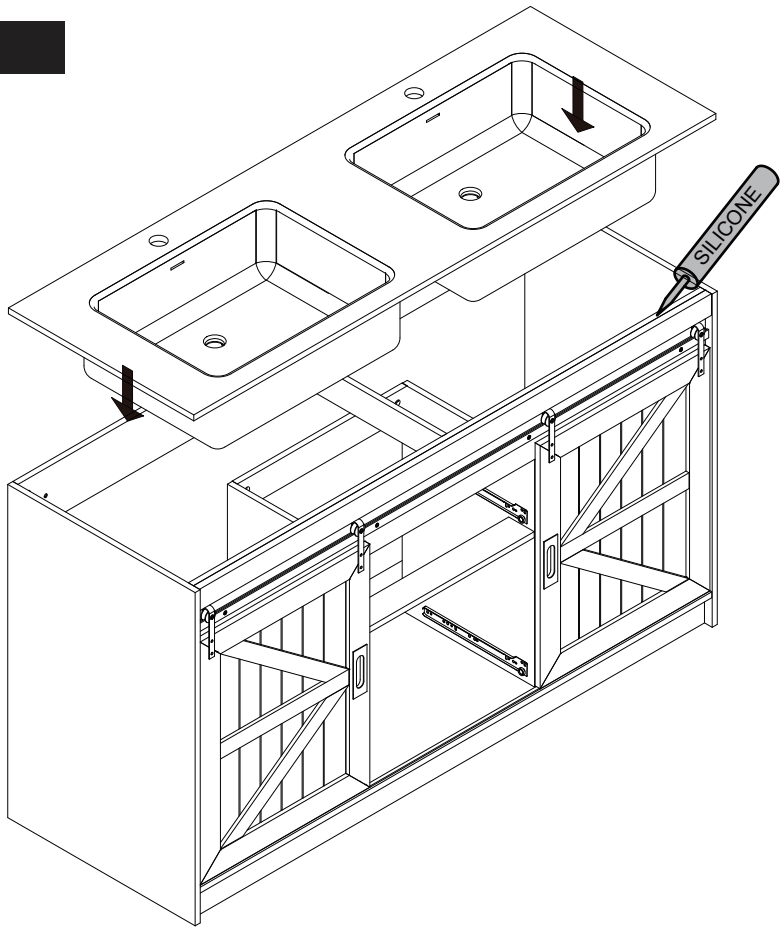

Apply a thin layer of silicone sealant around the top of the vanity, and then carefully secure the sink in place.
Remove excess silicone sealant with a damp rag.

Assembly Instructions

Step 24

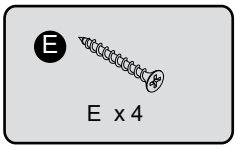

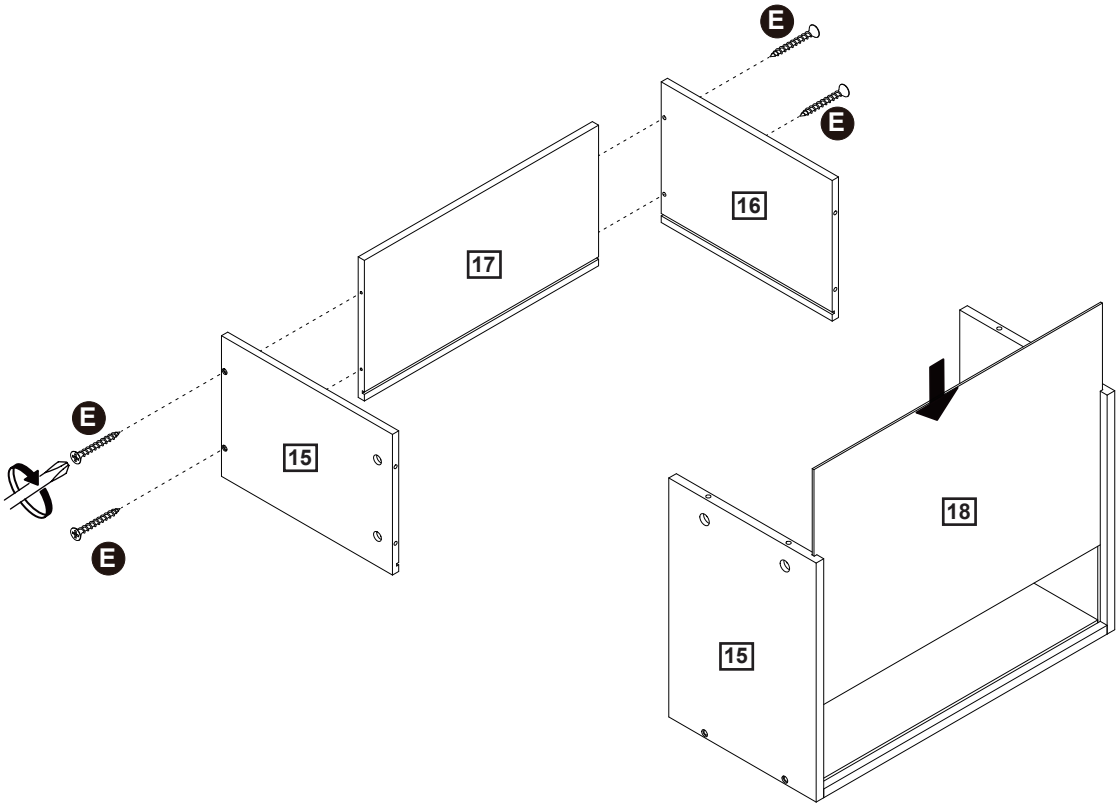

Attach part (15, 16) to part (17) using screw (E) with a screwdriver.
Slide part (18) into grooves.

Step 25

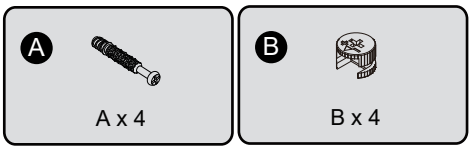

CAM-LOCK
Tighten until shoulder is flush with panel.Do not overtighten or undertighten(see example below)

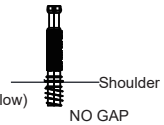

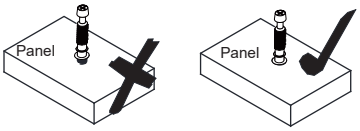

Step 25-1

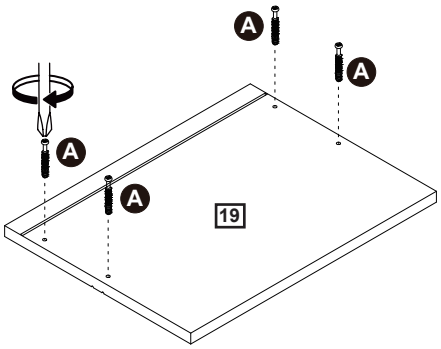

Step 25-2

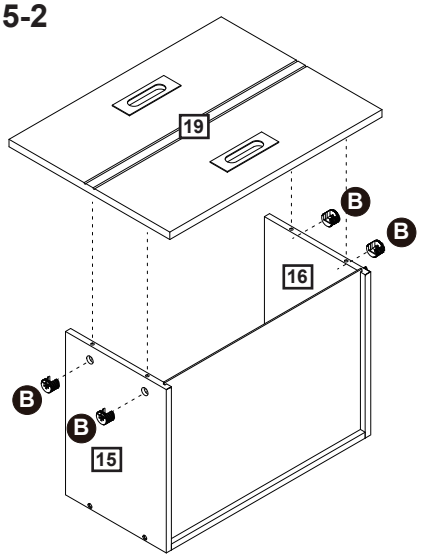

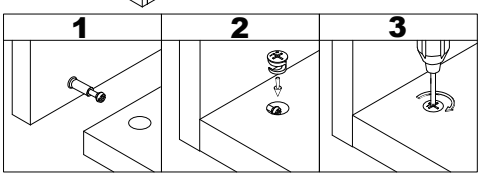

25-1: Attach cam bolt (A) to part (19) with a screwdriver.
25-2: Attach part (19) to part (15, 16), then insert and secure cam lock (B) to part (15, 16) to lock it.

Assembly Instructions

Step 26

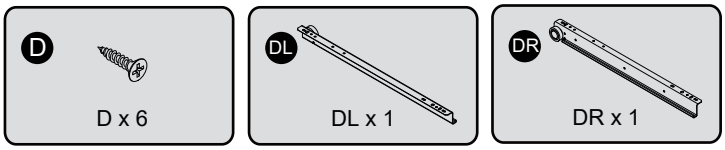

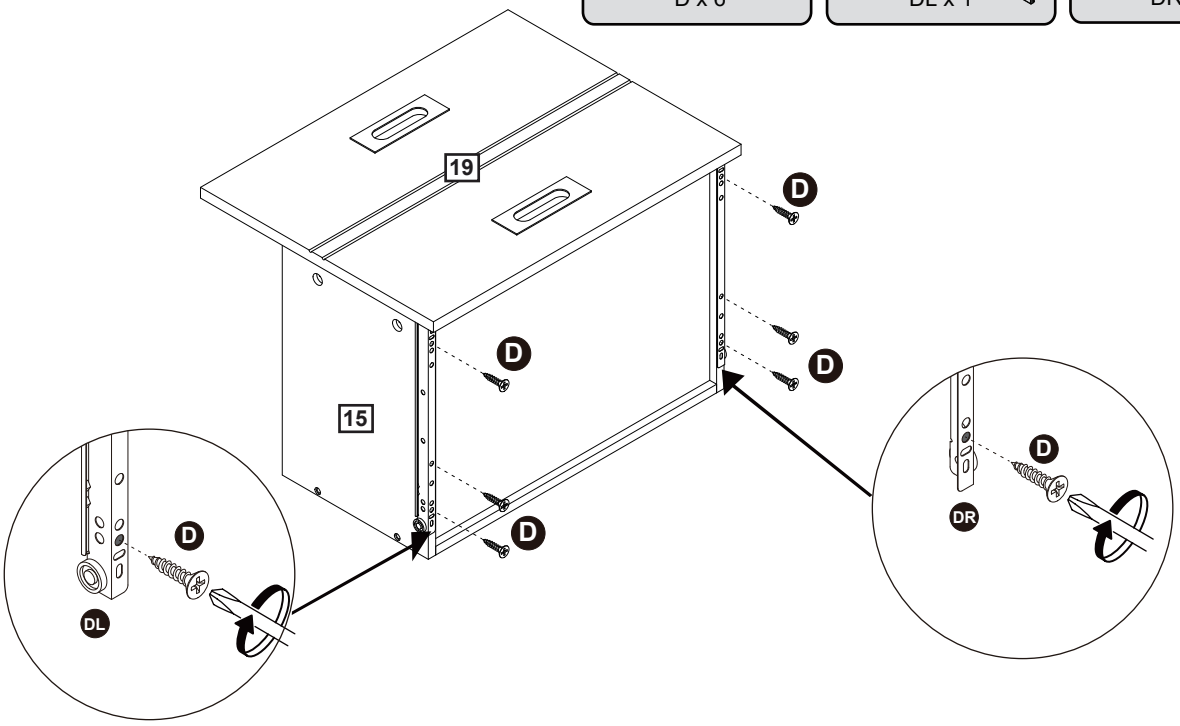

Use screw (D) to secure slide runner (DL) to part (15) and slide runner (DR) to part (16) with a screwdriver.

Step 27

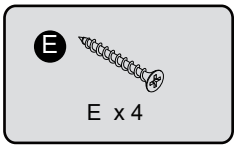

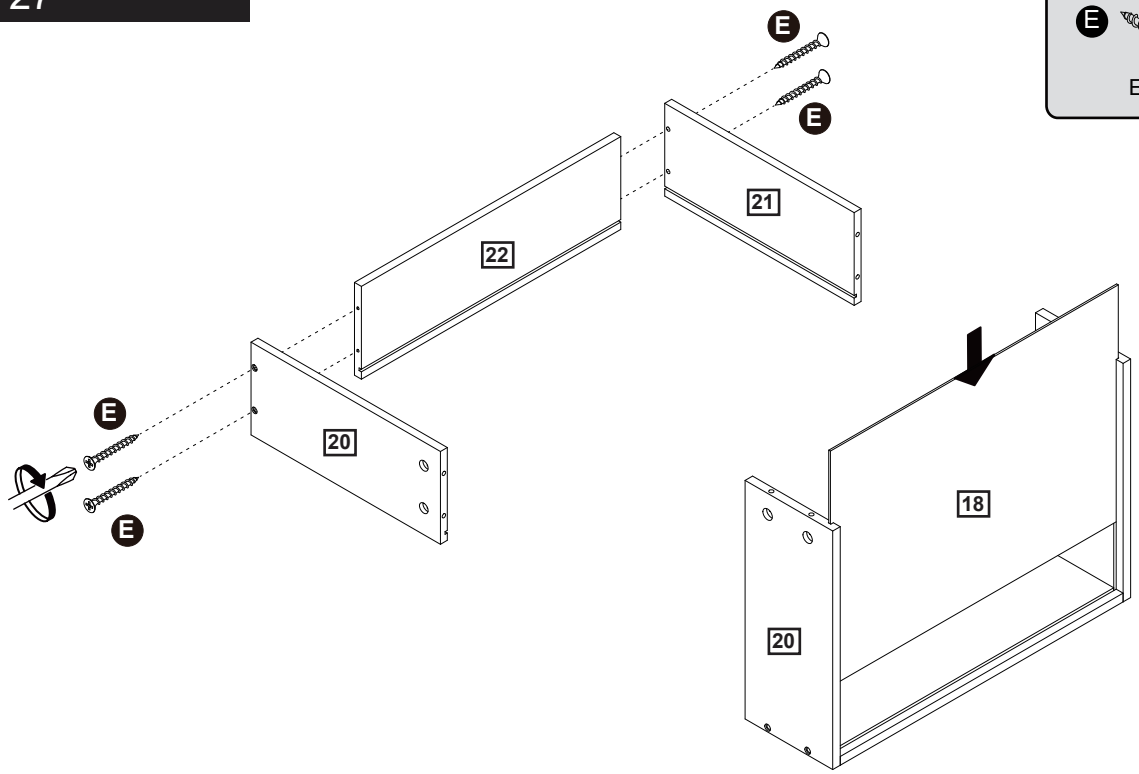

Attach part (20, 21) to part (22) using screw (E) with a screwdriver.
Slide part (18) into grooves.

Assembly Instructions

Step 28

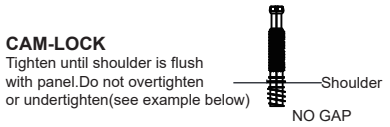

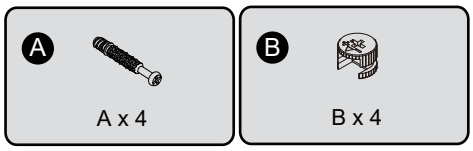

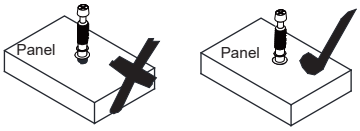

Step 28-1

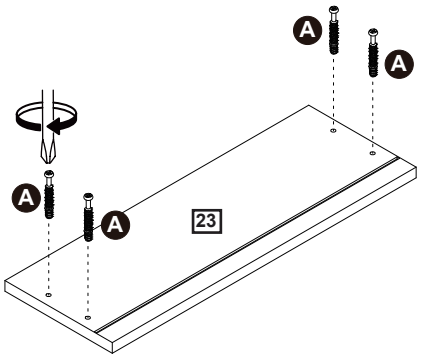

Step 28-2

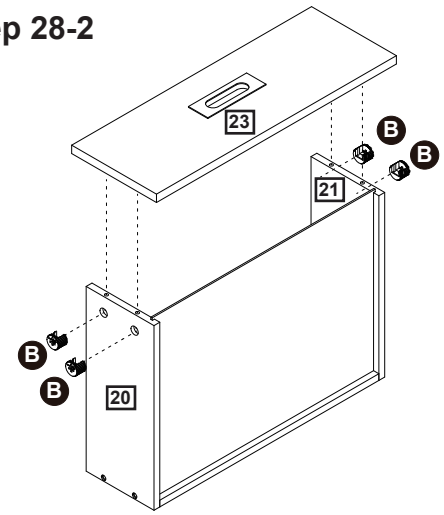

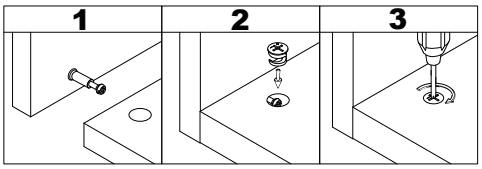

28-1: Attach cam bolt (A) to part (23) with a screwdriver.
28-2: Attach part (23) to part (20, 21), then insert and secure cam lock (B) to part (20, 21) to lock it.

Step 29

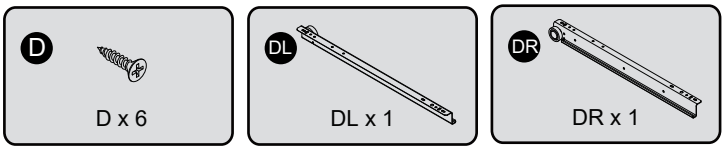

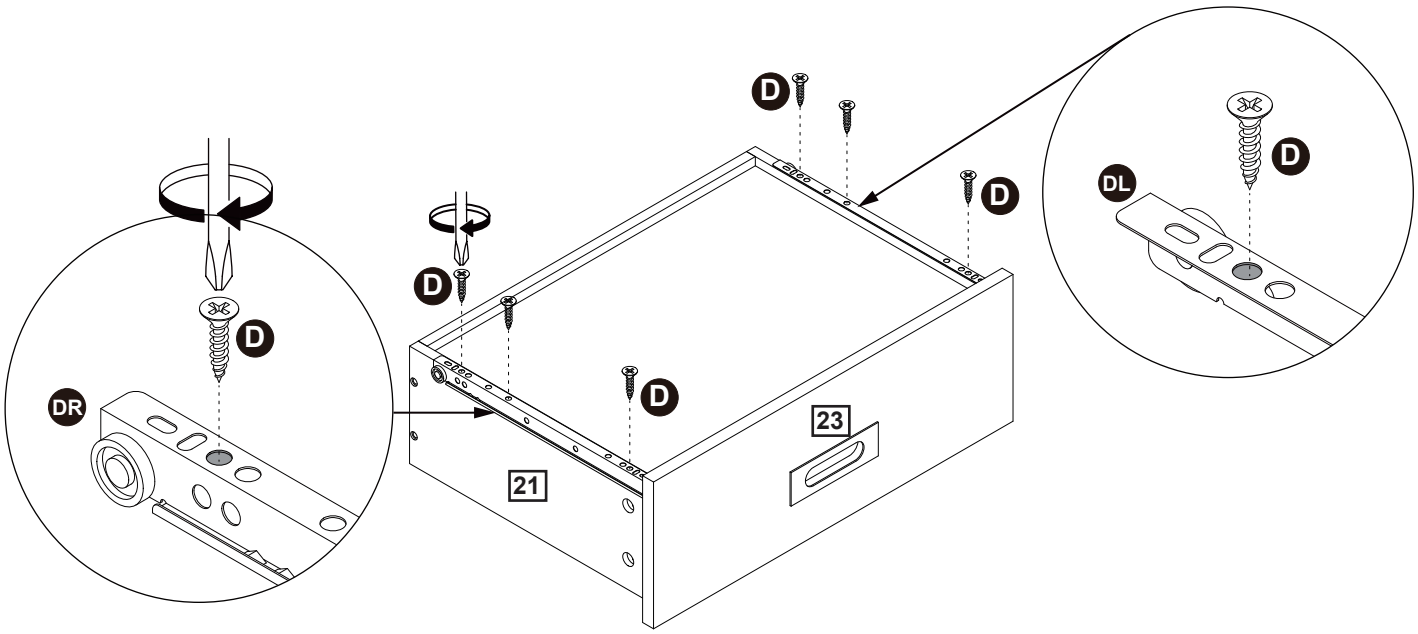

Use screw (D) to secure slide runner (DL) to part (20) and slide runner (DR) to part (21) with a screwdriver.

Assembly Instructions

Step 30

Congratulation! You've made to the last step! But don't be too thrilled yet, put on the drawer can be frustrating if you do it wrong. So, take your time and follow the steps below.

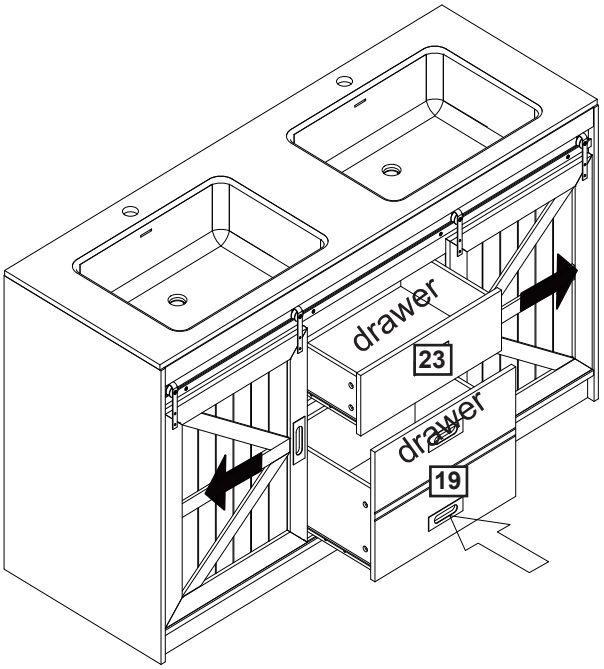

1. Please ensure that you have matched the wheels on BOTH sides of the drawer with the wheels on rails installed BEFORE push in the drawer.

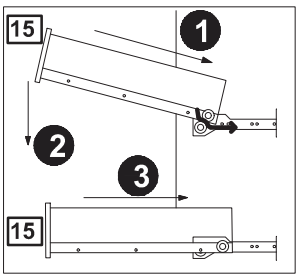

2. If the following occurs, redo the last step.

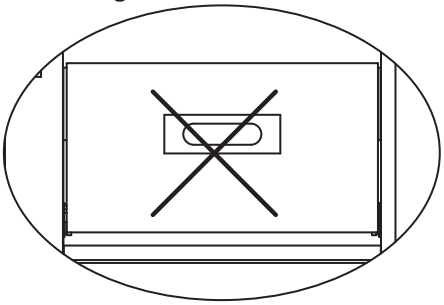

(both wheels are off the rails)

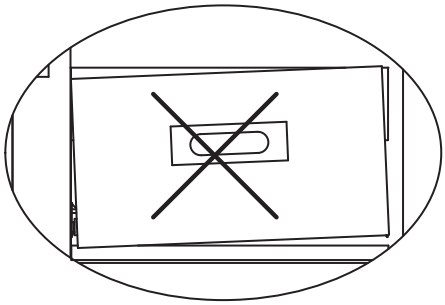

(one wheel is off the rail)

A Guide to Wall Mounting & Fixings

Important note:

If plastic wall plugs (rawl plugs) are supplied with your product, e.g.:



- these are only suitable for use in masonry walls.

If you are in any doubt about the correct wall plugs for your wall, seek professional advice.

Failure of the product due to using the incorrect fixings is the responsibility of the installer.

Important: when drilling into walls always check that there are no hidden wires or pipes etc.

Make sure that the screws and wall plugs being used are suitable for **supporting your unit. Consult a qualified tradesperson if you** are unsure.

Hints:

1: General rule: always use a larger screw and wall plug if you are not sure.
2: Ensure you use the recommended drill bit to match the wall plug and hole size.
3: Ensure you drill the hole horizontally; do not force the drill or enlarge the hole.
4: Take extra care when drilling high walls, ceilings and ceramic tiles. Ensure wall plugs are inserted beyond the thickness of the ceramic tiles to avoid the tiles splitting or cracking.
5: Ensure wall plugs are well fitted and are a tight fit in the drilled hole.

Types of walls

You can use one of the following types of wall plug if your walls are made of brick, breeze block, concrete, stone or wood.

No.1 “General Purpose” wall plug

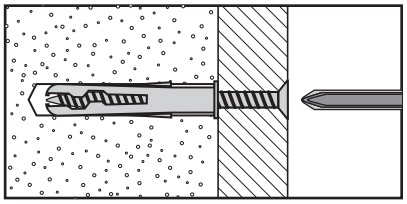

Generally aerated blocks should not be used to support heavy loads, use a specialist fitting in this case. For light loads, general purpose wall plugs can be used.

No.3 “Cavity Fixing” wall plug

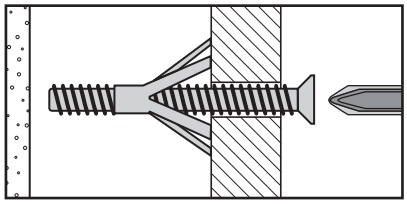

For use with plasterboard partitions or hollow wooden doors.

No.5 “Hammer Fixing” wall plug

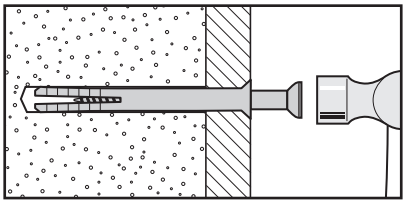

For use with walls stuck with plasterboard. The hammer fixing allows it to be fixed to the wall rather than the plasterboard. Always check the fixing is secure to the retaining wall.

No.2 “ Plasterboard” wall plug

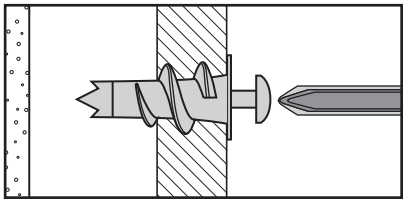

For use when attaching light loads onto plasterboard partitions.

No.4 “ Cavity Fixing – Heavy Duty” wall plug

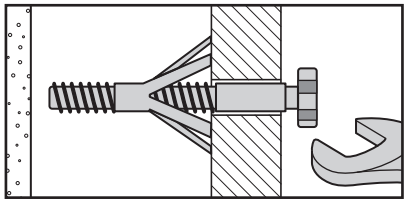

For use when fitting or supporting heavy loads such as shelving, wall cabinets and coat racks.

No.6 “ Shield Anchor” wall plug – heavy loads

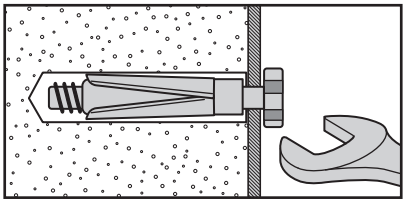

For use with heavier loads such as TV and HiFi speakers and satellite dishes etc.

Care & Maintenance

Safety: always check the fitting and location to ensure your safety in and around the home.

Fitting: from time to time check the fitting to ensure the wall plugs or screws do not become loose.