A*1

B*1

C*1

D*1

E*1

F*3

M8*60MM

G*6

M8*60MM

H*2

M6*60MM

I*3

Φ8*Φ22mm

J*2

Φ6*Φ13mm

K*6

L*1

M8

M*1

M6

N*4

1

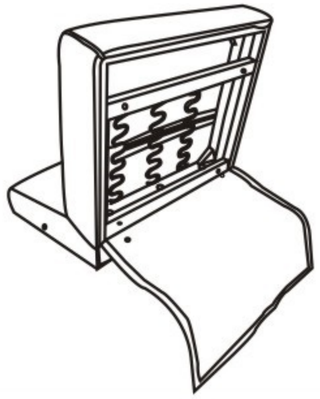

2

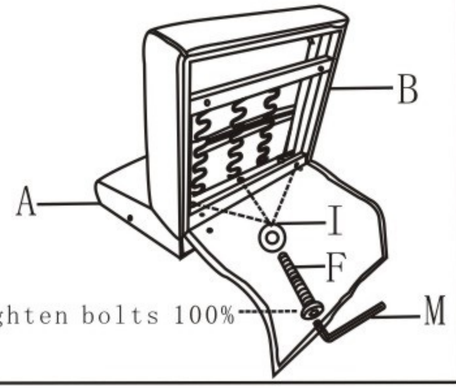

Please do tighten bolts 100%

3

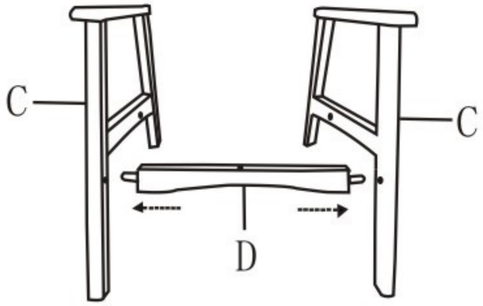

4 Please do tighten bolts 50%

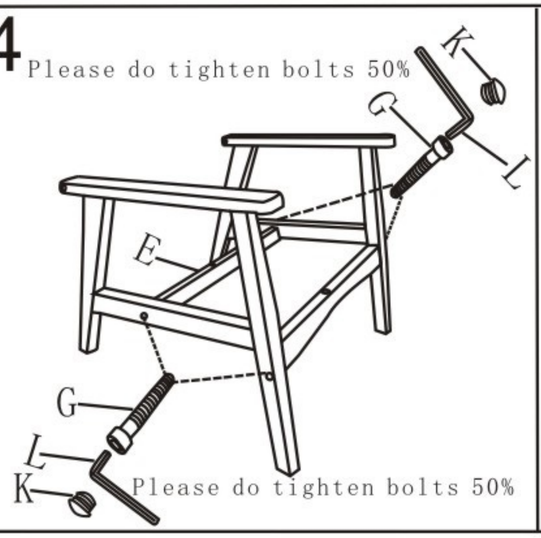

Please do tighten bolts 50%

5

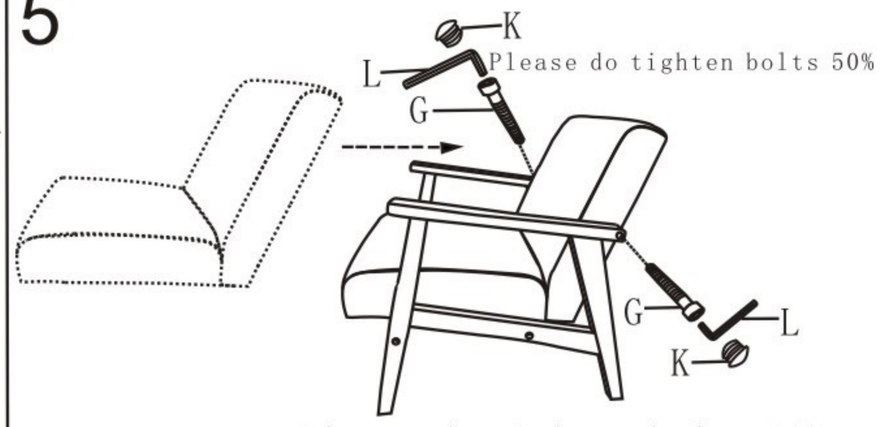

Please do tighten bolts 50%

Please do tighten bolts 50%

6 Please do tighten bolts 50%

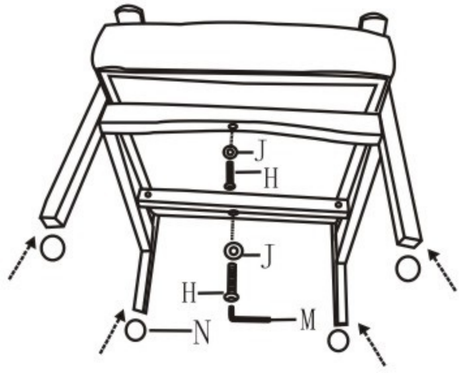

7 Please do tighten bolts 100%

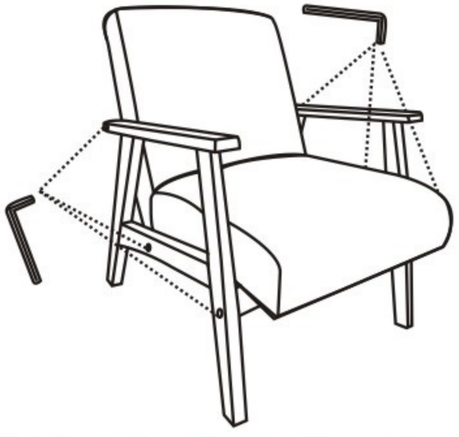

8

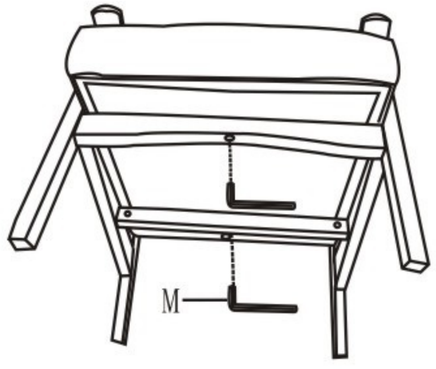

Please do tighten bolts 100%
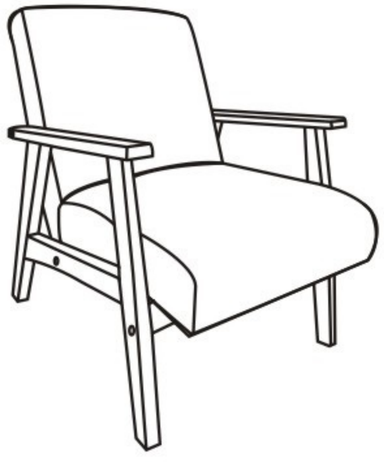
9