Owner Manual

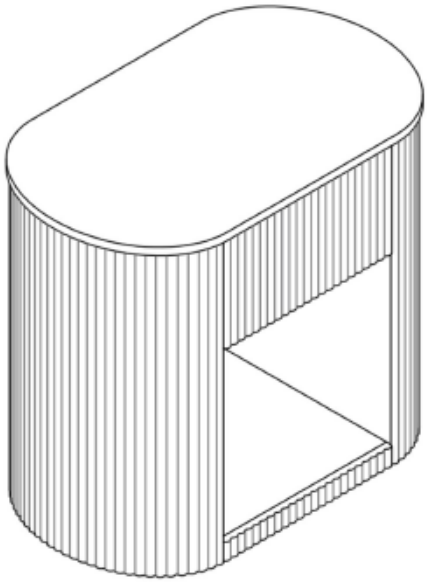

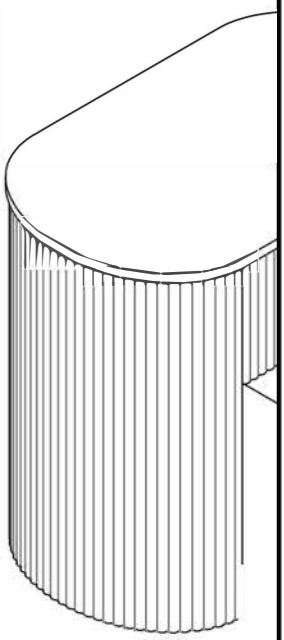

WARRANTY

We strive to offer high quality product and we also try our best to satisfy each customer that order from us, no matter on products or services as needed. Each customer receives a record of their order, such as the order number or item receipt. For any items that are out of warranty period, you may still be able to purchase the replacement parts from our company if they are available.

MAINTENANCE AND WARNING

If you are experienced in furniture assembly, you may work alone. Otherwise, please assemble with assistance.

Follow the step-by-step instructions carefully. This instruction manual will reduce your assembly time and difficulties. Please pay close attention to part orientation and fitment during assembly.

Keep away from heat and open flames.

Protect the surface from sharp or abrasive objects.

Do not use harsh cleaners, polishes, or solvents.

Use a mild soap and warm water solution (1:10) to clean.

Do not place in direct sunlight; fading may occur over time.

Avoid jumping or striking the cabinet. Do not write on it without a protective surface.

For residential use only. Not designed for commercial use.

Do not jump on the product.





Two people





Around 60 min

PRODUCT DESCRIPTION

Modern minimalist solid wood two-door storage cabinet. It features a simple square shape with clean, crisp lines. The two equal-width front doors create a neat and balanced look, while the natural rattan inlay on the door panels adds rich visual texture and tactile interest. The overall style is calm warm, and modern.

One-piece molded cabinet body with solid wood feet. The cabinet features a sturdy integrated structure, with solid wood feet at the bottom. This not only raises the cabinet to prevent moisture but also greatly enhances the overall visual and physical stability, offering outstanding load-bearing capacity.

Exquisite rattan door panels: Not only do they create a sense of visual continuity and refined detail, but they also offer a unique tactile experience.

All-solid-wood construction. The cabinet body, door panels, and thick base are all crafted from natural solid wood, featuring clear, natural grain and a sturdy texture. The use of solid wood throughout ensures outstanding stability, load-bearing capacity, and environmental health, making it highly durable.

Large-capacity partitioned storage system. The combination of double doors, double drawers, and an open compartment provides clearly divided, spacious storage areas, making it easy to organize books, documents, everyday items, or AV equipment. This is the core storage solution for keeping your living room, study, or bedroom neat and orderly.

EXPLODED VIEW

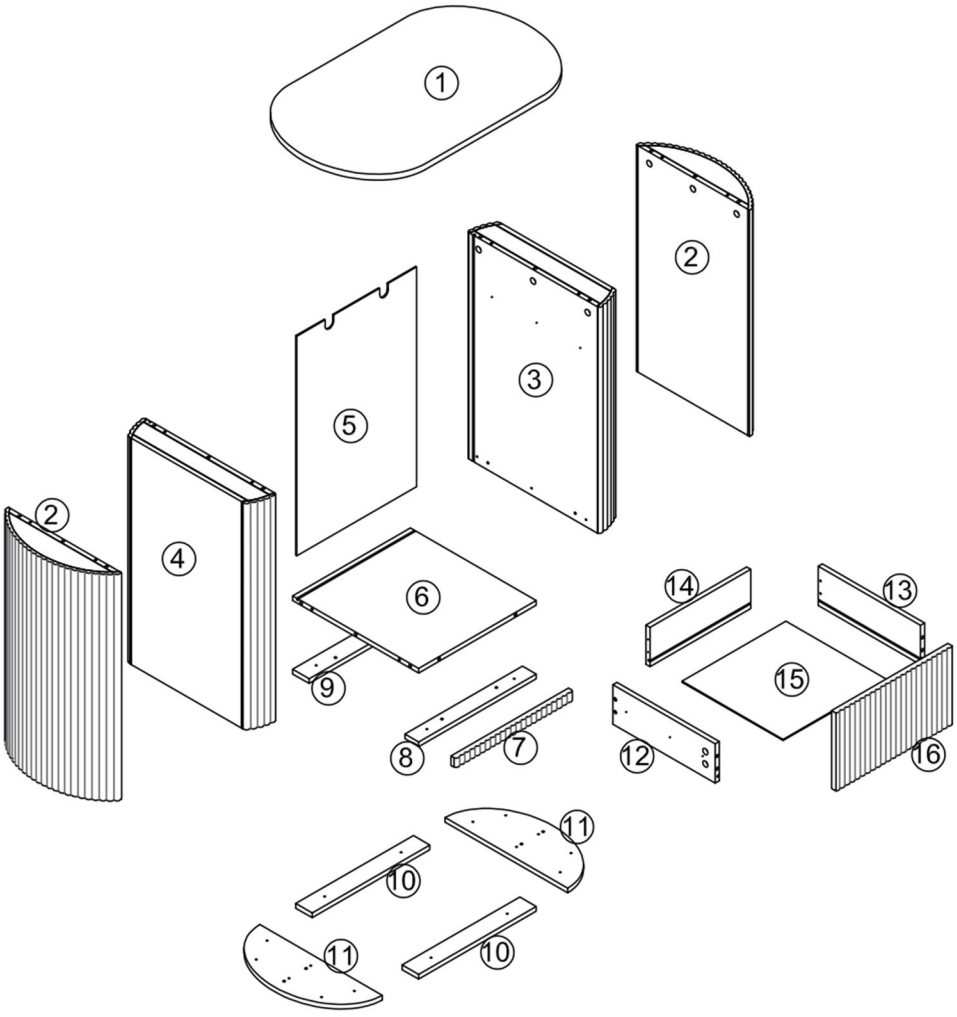

PARTS

 Top panel	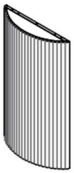 Curved side panel	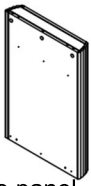 Side panel	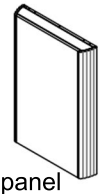 Side panel
① x1	② x2	③ x1	④ x1
 Back panel	 Bottom panel	 Decorative strip	 Support strip
⑤ x1	⑥ x1	⑦ x1	⑧ x1
 Support strip	 Support strip	 Curved bottom panel	 Drawer side
⑨ x1	⑩ x2	⑪ x2	⑫ x1
 Drawer side	 Drawer back	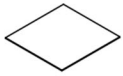 Drawer bottom panel	 Drawer front
⑬ x1	⑭ x1	⑮ x1	⑯ x1

HARDWARE

TOOL LIST

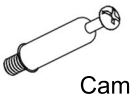 Cam bolt Ø6 X 35mm	 Cam nut Ø15 X 9.5mm	 Wooden dowel Ø6 X 30mm	 Screwdriver
A x24	B x24	C x12	D x1
 Screw M3.5 x 12 mm	 Screw M4 x 25 mm	 Screw M3 x 16 mm	 Screw M4 x 35mm
E x14	F x16	G x10	H x4
 Back plate buckle	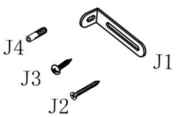 Anti-tip hardware	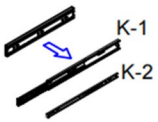 Drawer slide	 Wooden dowel Ø6 X 20mm
I x10	J x2	K x2	L x4
 Levelling legs	 Screw M4 x 20 mm		
M x4	N x4		

Please make sure all hardware&packing material fitting the list. Especially some small accessories may be missing during transportation. Please contact us if you have any question.

step 1 ---Install the Cam bolt (A) & Anti-tip hardware&wooden dowel(C)

1.Insert cam bolt (A) into pre-drilled holes of Top panel (1)& Decorative strip (7),tighten it with screwdriver.
2.Insert the wooden dowel (C) it as shown.
3.Use screws (J3) to attach Anti-tip hardware (J2) to Top panel (1), tighten it with screwdriver.

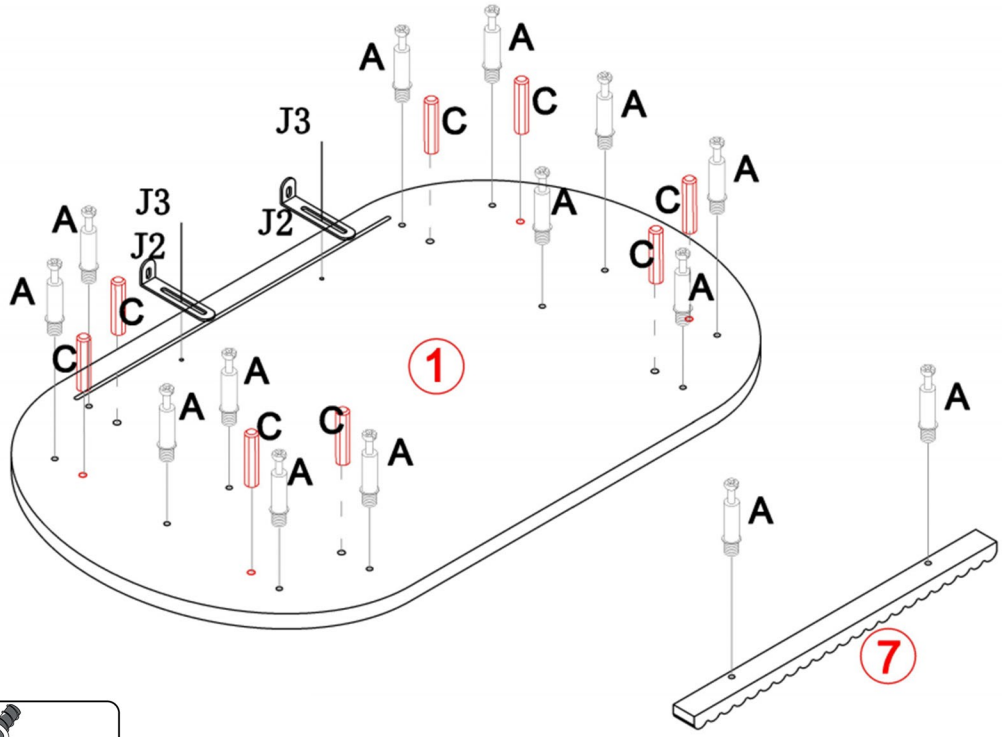

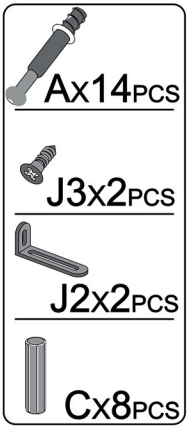

step 2 ---Select the sliding track (K1&K2)

Disassemble the slide rail (K) into K1 and K2 as shown in the diagram. Install sliding track(K1) at the corresponding positions on the side panel and center panel according to the illustration in step 3, and install sliding track(K2) on both sides of each drawer in step 13.

Take care when installing the sllde ralls as they have been pre-lubricated

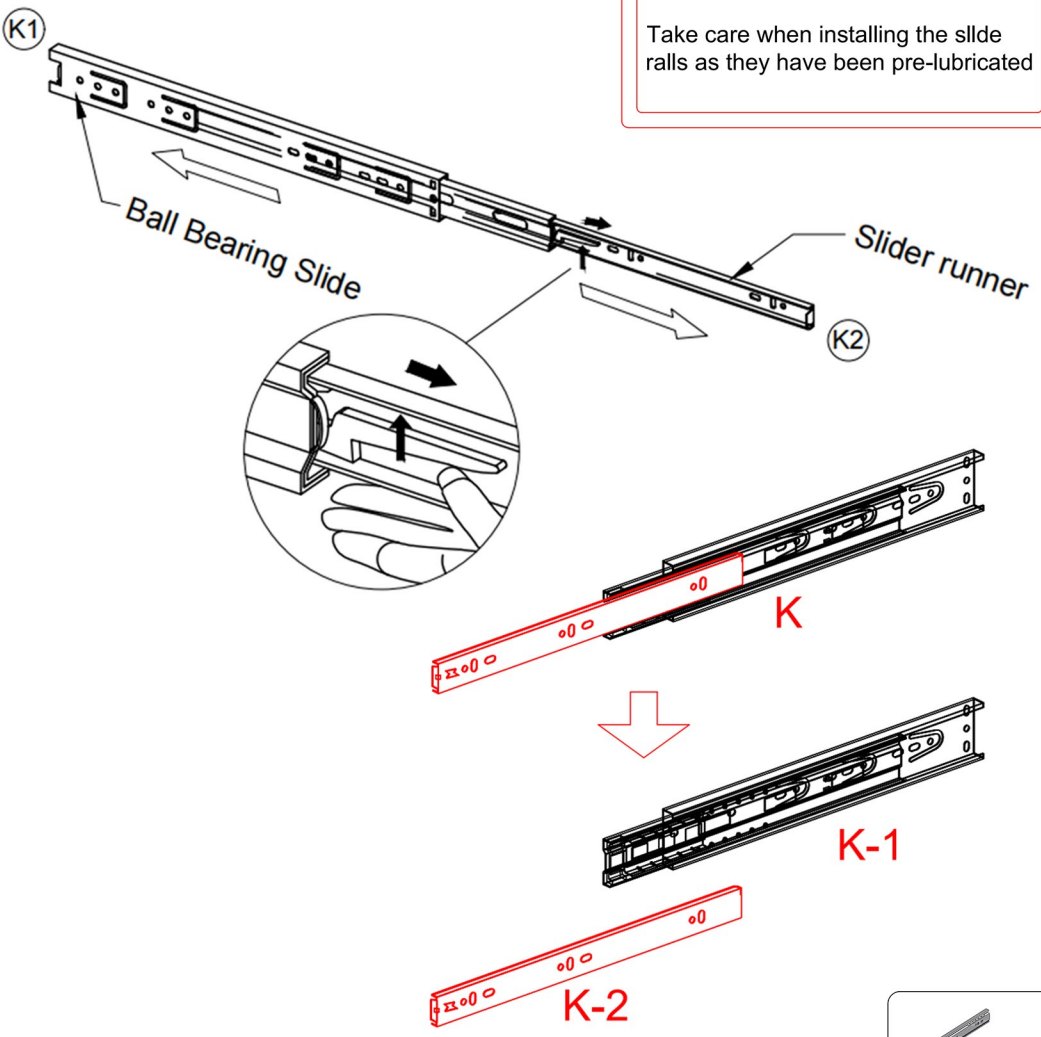

Kx 2 PCS

step 3 ---Install the Slide rail (K-1)

1.Screw Cam bolt (A) into it as shown.
2.Use the screws (E) to attach the Slide rail (K-1) to the Side panel (3&4), Tighten it with screwdriver.

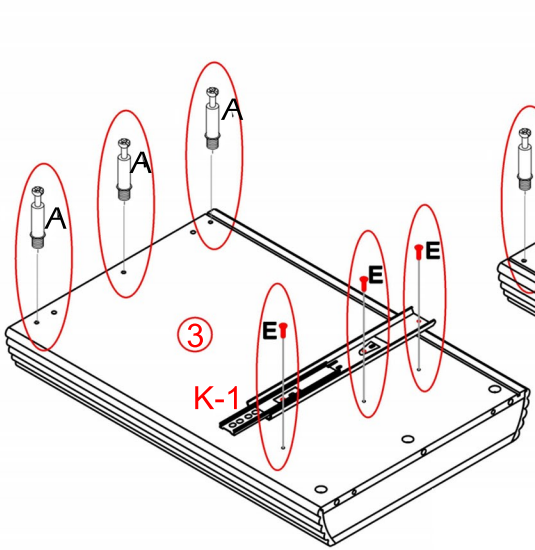

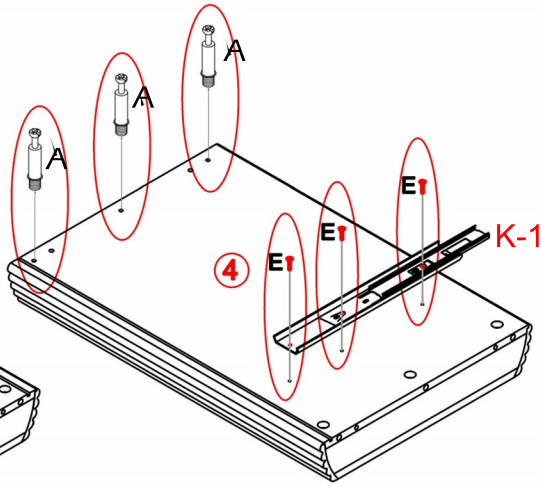

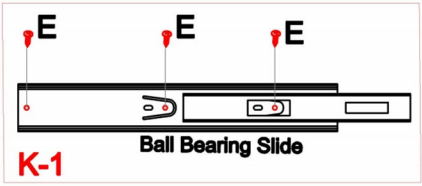

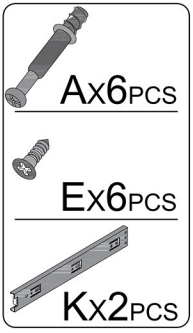

step 4 ---Install the bottom panel(6)

1.Insert Wooden dowel (C) into pre-drilled holes of Bottom panel (6) ,and then insert Bottom panel (6) into it as shown,insert Decorative strip (7) into Bottom panel (6) as shown.
2.Insert Cam nut (B) into the pre-drilled holes of Bottom panel (6) and , tighten it with screwdriver.

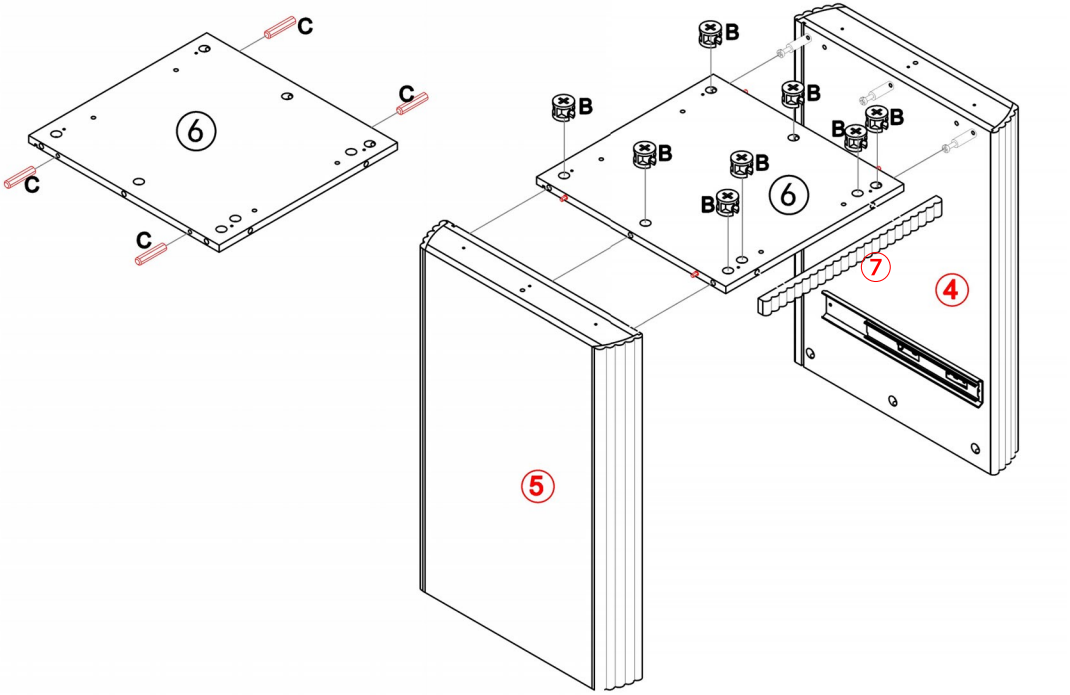

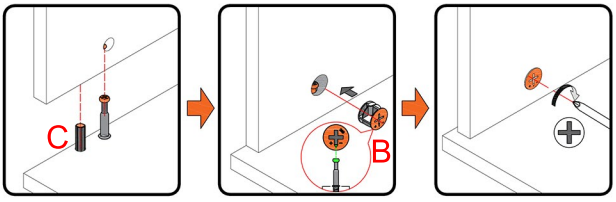

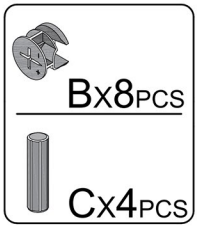

step 5 ---Install the Back panel(5)

Slide the Back panel (5) into the grooves along the Side panel (4&5) , Ensure it fits flush and aligns tightly with the internal channels.

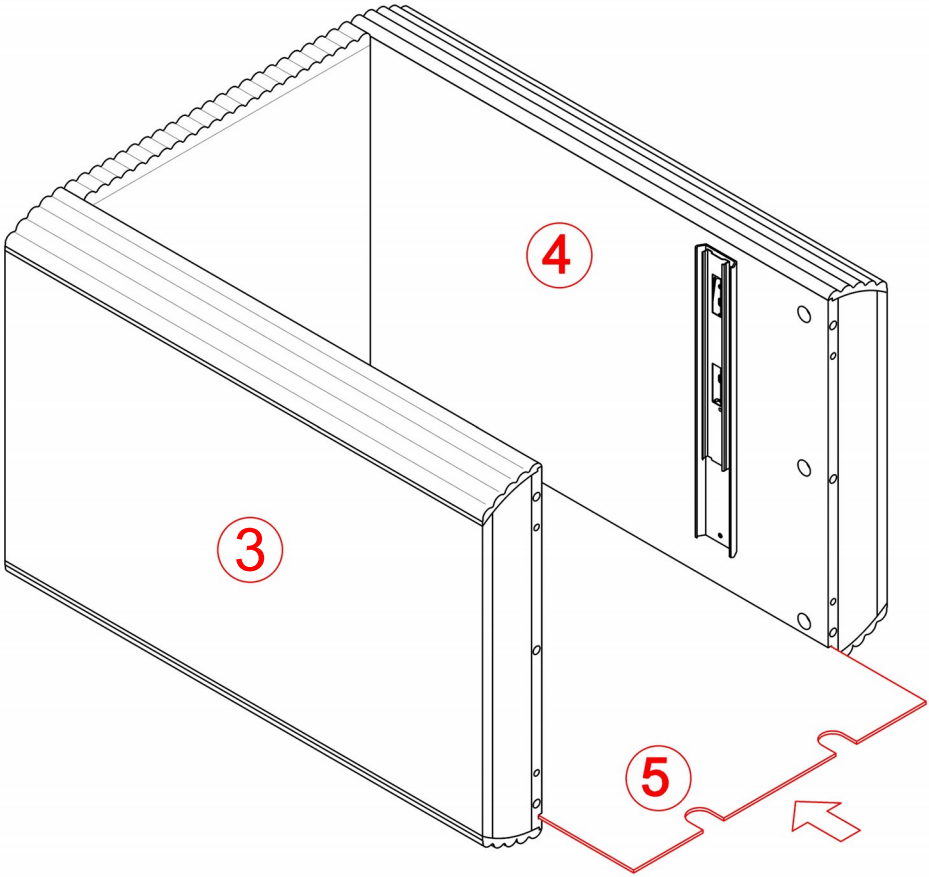

step 6 ---Install Curved side panel (2)

1.Insert Curved side panel (2) into it as shown.
2.Insert Cam nut (B) into the pre-drilled holes of Curved side panel (2), tighten it with screwdriver.

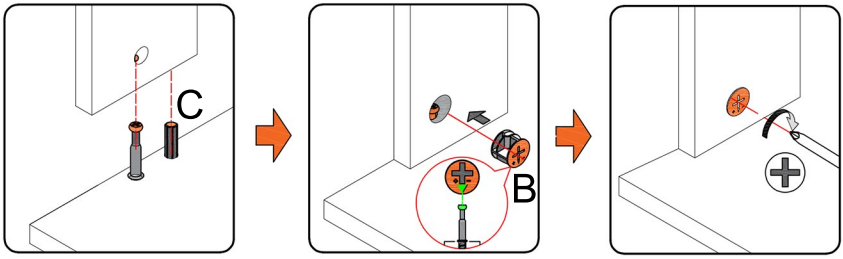

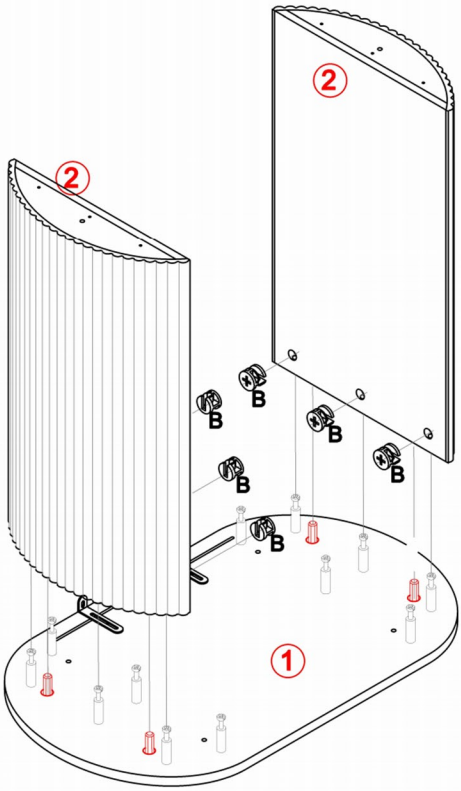

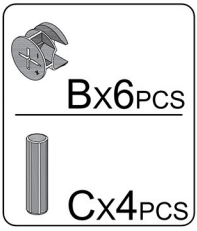

step 7 ---Install the Preassembly part at step 5

1.Insert Preassembly part at step 5 into it as shown.
2.Insert Cam nut (B) into the pre-drilled holes of Side panel (3&4),tighten it with screwdriver.

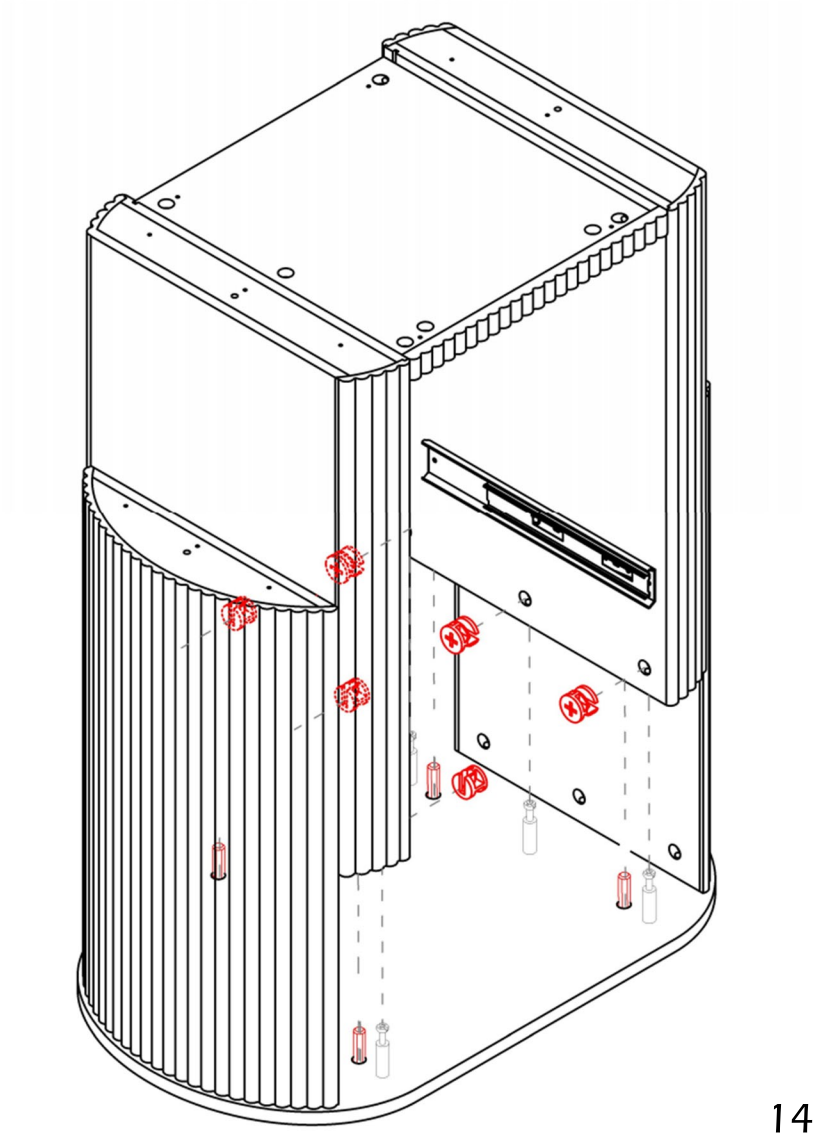



BX6PCS

step 8 ---Install the Support strip (8&9) and Back plate buckle (I)

1.Use the screws (N) to attach the Support strip (8&9) to Bottom panel (6), Tighten it with screwdriver.
2.Use screw (G) to attach Back plate buckle (I) to Back panel (5),Tighten it with screwdriver.

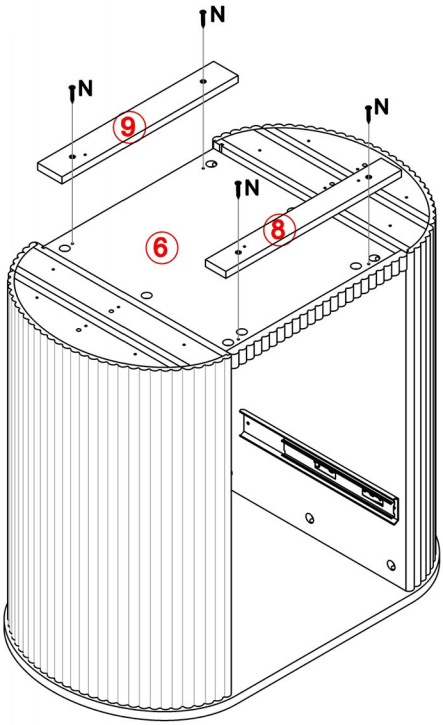

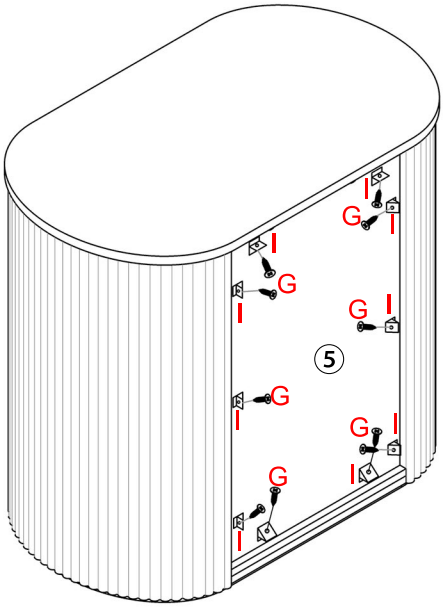

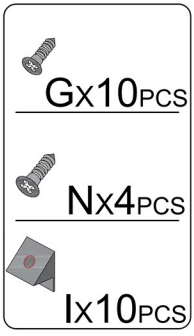

step 9 ---Use screws (F) to attach them.

1.Insert the wooden dowel (L) into it.
2.Use screws (F) to attach Curved bottom panel(11) to it,tighten it with screwdriver.
3.Use screws (F) to attach Support strip(10) to it,tighten it with screwdriver.

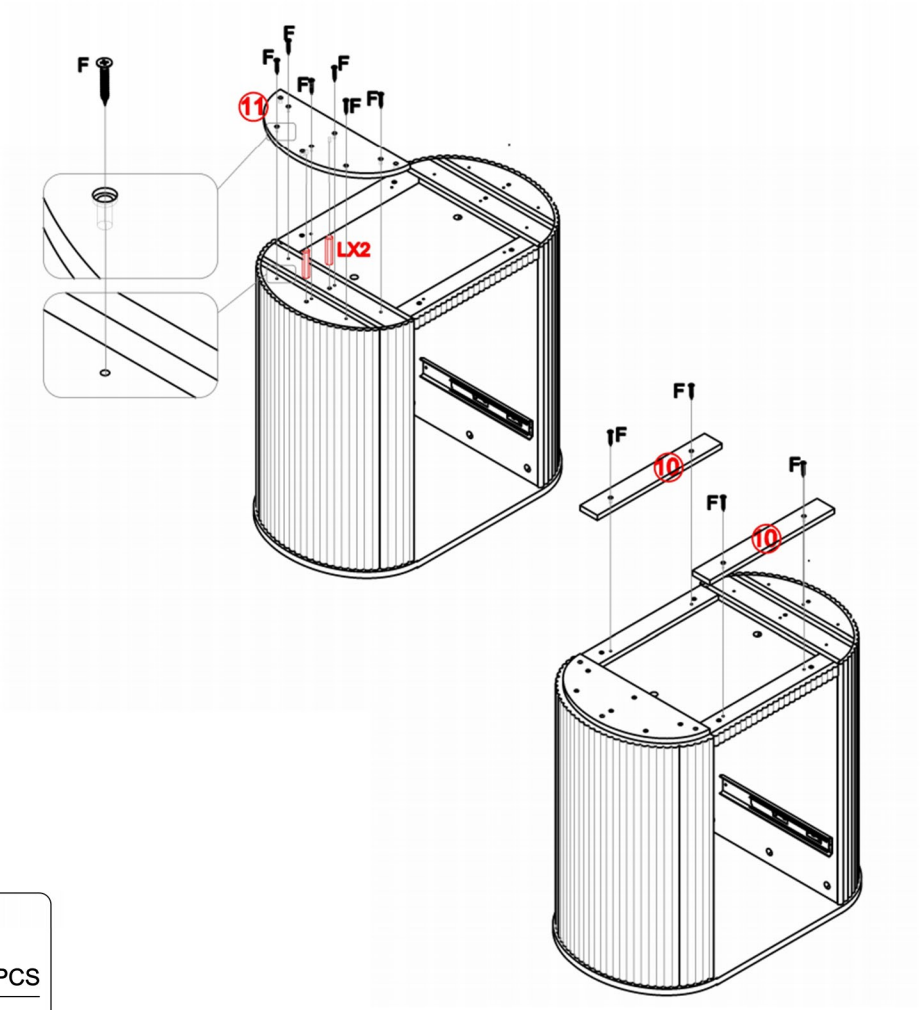

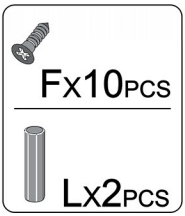

step 10 ---Install the Adjustable glide (M)

1.Insert the wooden dowel (L) into it as shown.
2.Use screws (F) to attach Curved bottom panel(11) to it,tighten it with screwdriver.
3.Screw the Leveling legs (M) into the adjustment hole at the bottom of the Curved bottom panel(11). If the cabinet is unbalanced, you can adjust

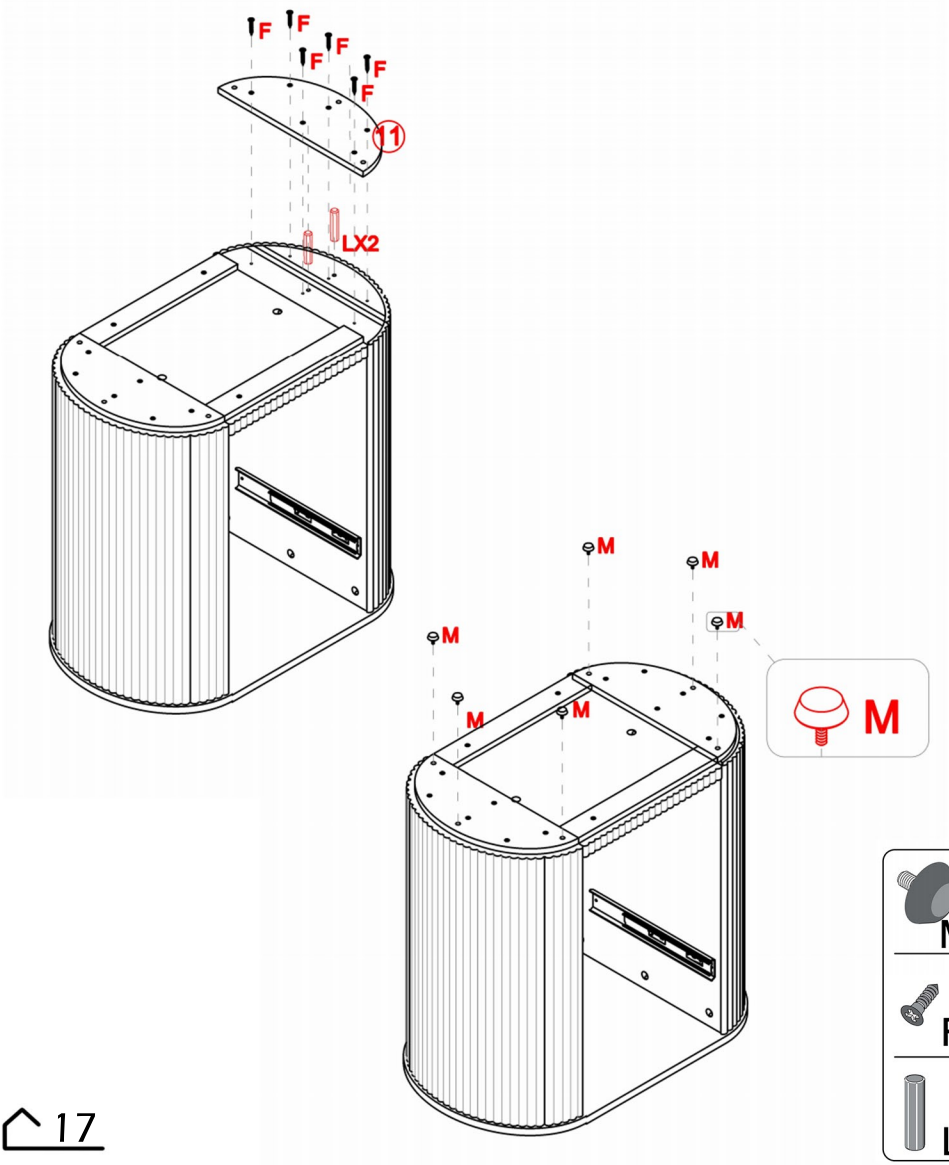

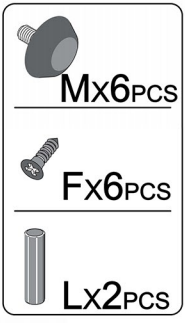

step 11 ---Install the Drawer

1.Use Screws (H) to attach Drawer side (12&13) to Drawer back (14), tighten it with screwdrivers.
2.Slide Drawer bottom panel (15) into the grooves along the Drawer Side (12&13),Ensure it fits flush and aligns tightly with the internal channels.

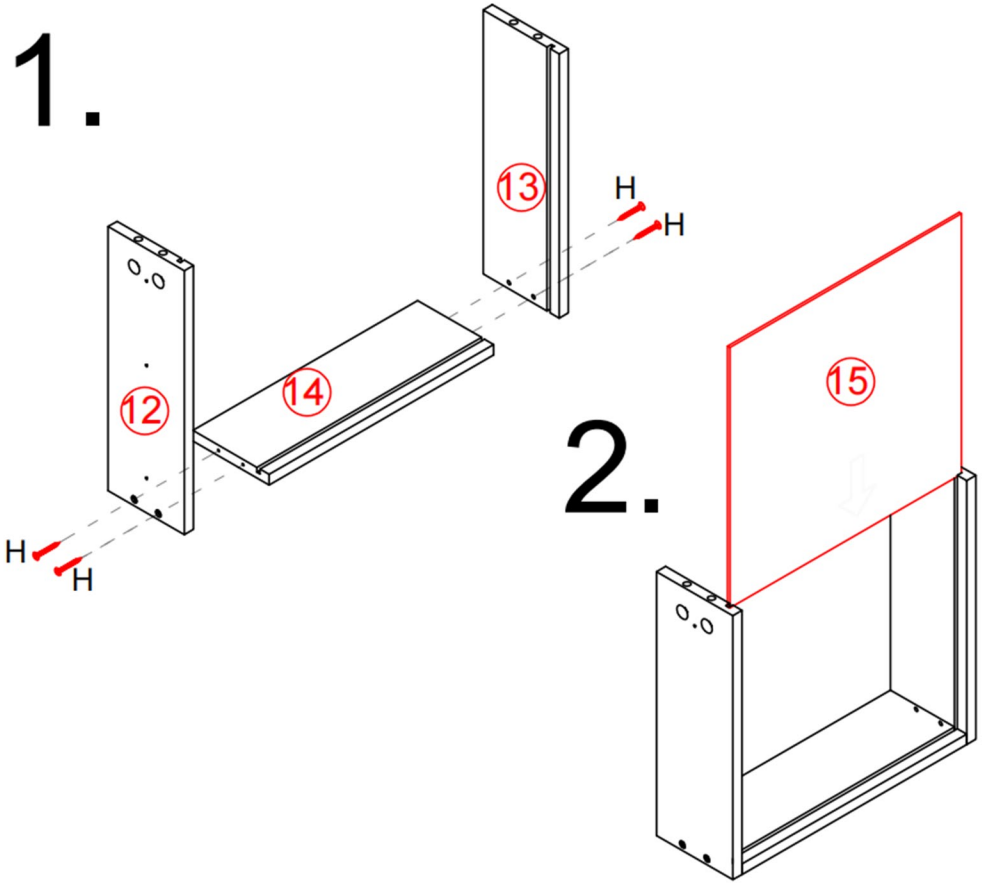



step 12 ---Install the Drawer front (16)

1.Insert cam bolt (A) into pre-drilled holes of Drawer front (16),tighten it with screwdriver.
2.Insert Cam nut (B) into the pre-drilled holes of Drawer side (12&13) , tighten it with screwdriver.

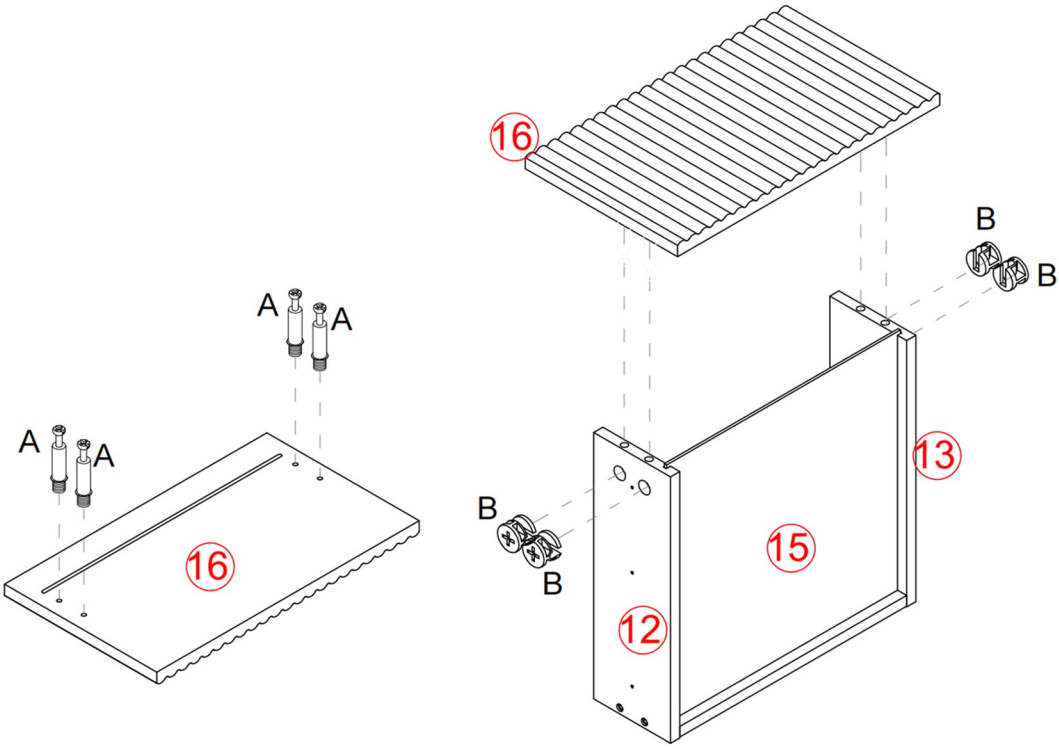

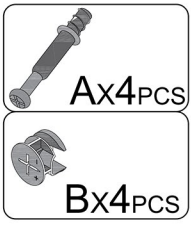

step 13 ---Install the slider runner (K-2)

Use the screws (E) to attach the Slider runner (K-2) to the Drawer side, Tighten it with screwdriver.

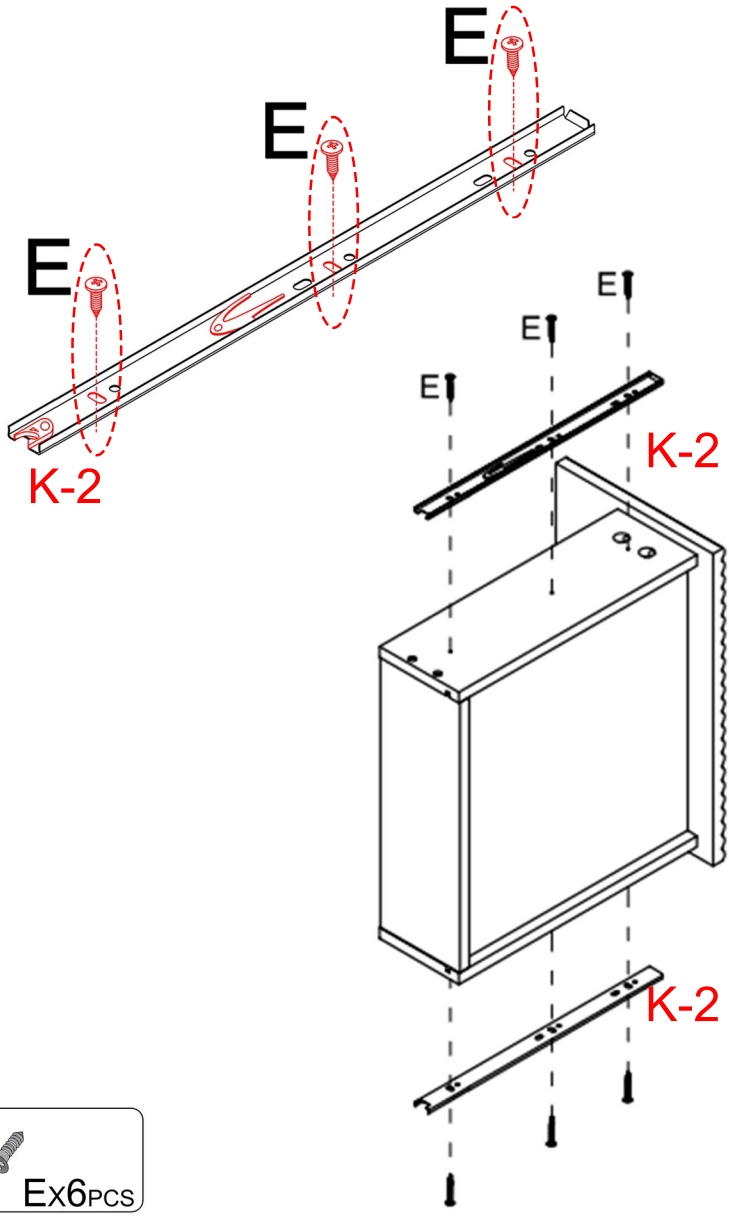

EX6PCS

step 14 ---Install Anti-tip hardware

In order to fix the cabinet to the wall.
First move the cabinet against the wall, then hold the Iron Plates (J1) near the back-top edge of the cabinet to determine position, and mark the positions on the wall with a pencil.Use a drill or powertool to make holes at the marked spots (For at least 30 mm depth).Hammer the Wall Plugs (J4) into the drilled holes until flush.Insert the screw (J2) through Iron Plate (J1) and tighten into the Wall Plugs (J4).

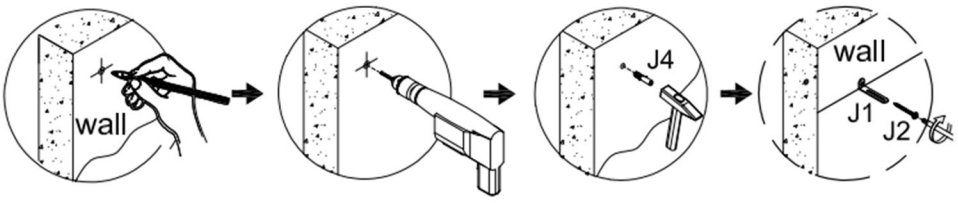

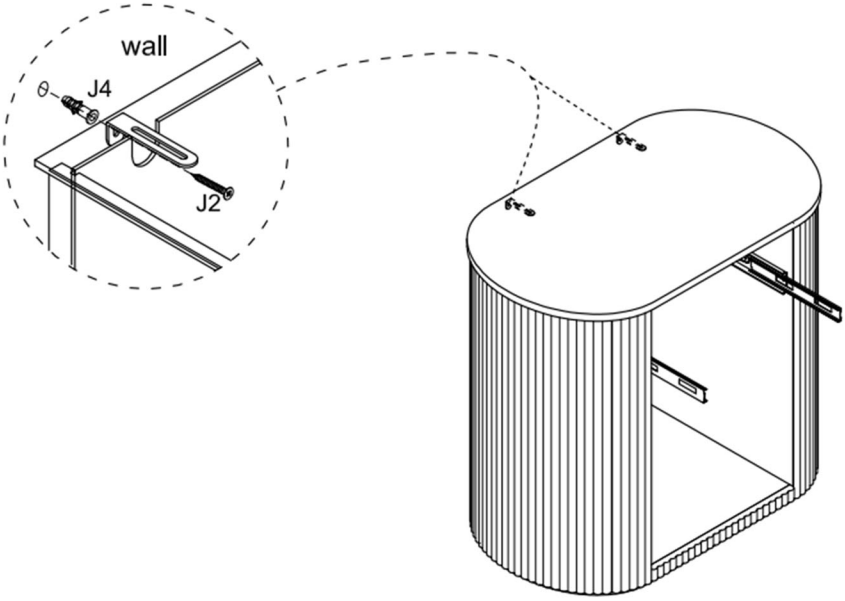

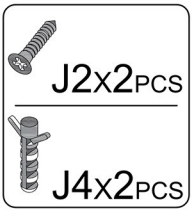

step 15 ---Install the Drawer

Align the drawer slide and push it in.

