# INSTALLATION
*Product Manual*

Version: 740002US-01-26A-AA

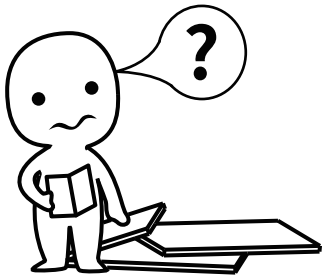

## IMPORTANT INFORMATION!

please read the entire manual before starting to assemble and/or using this product.follow the manual thoroughly and keep it for further reference.

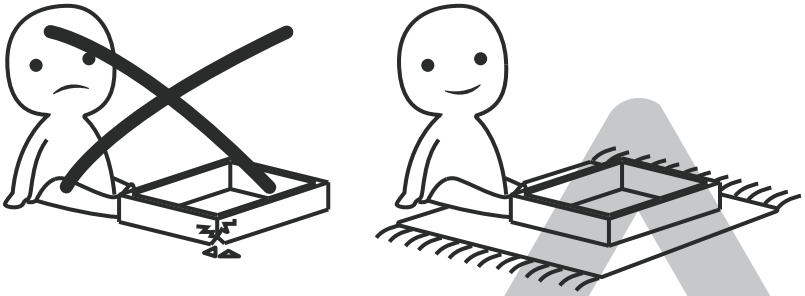

## AVOID SCRATCHES!

In order to avoid scratching this furnuture should be assembled on a soft layer-could be a rug.

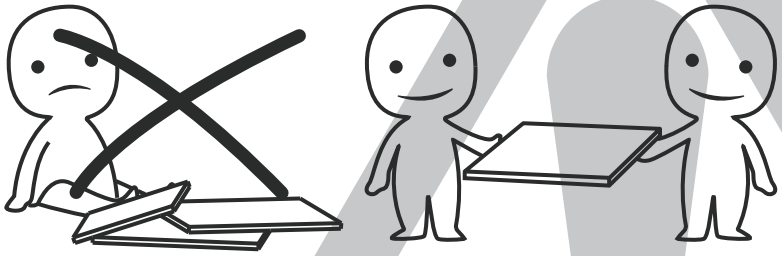

## IMPROVE EFFICIENCY !

Try to find a partner to install with you, which can speed up the installation efficiency and shorten the time.

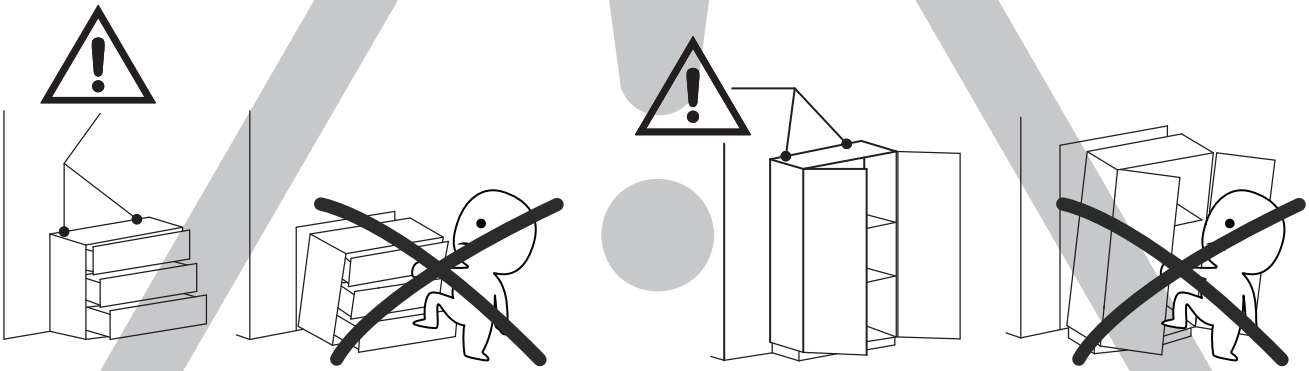

## ANTI-TOPPLE WARNING !

Overturned furniture can cause serious or fatal crush injuries. To prevent tipping over, be sure to use the wall attachment, if not included with this product. Please purchase the wall attachment that fit your wall. If unsure, seek professional advice. Please read and follow each step of the instructions carefully.

## IMPORTANT !

It is important that any product which is assembled using any kind of screw is re-tightened 2 weeks after assembly,and once every 3 months - in order to assure stability through-out the lifespan of the product.

For regular maintenance and cleaning of the product, for the frame, please use a rag dipped in neutral detergent to fully wipe it, and then dry it with a clean rag.For glass materials, wipe with a rag dampened with water glass cleaner, and then dry with a dry rag.

Do not use an electric screwdriver, and do not use too much force when installing, because the board is easy to break.

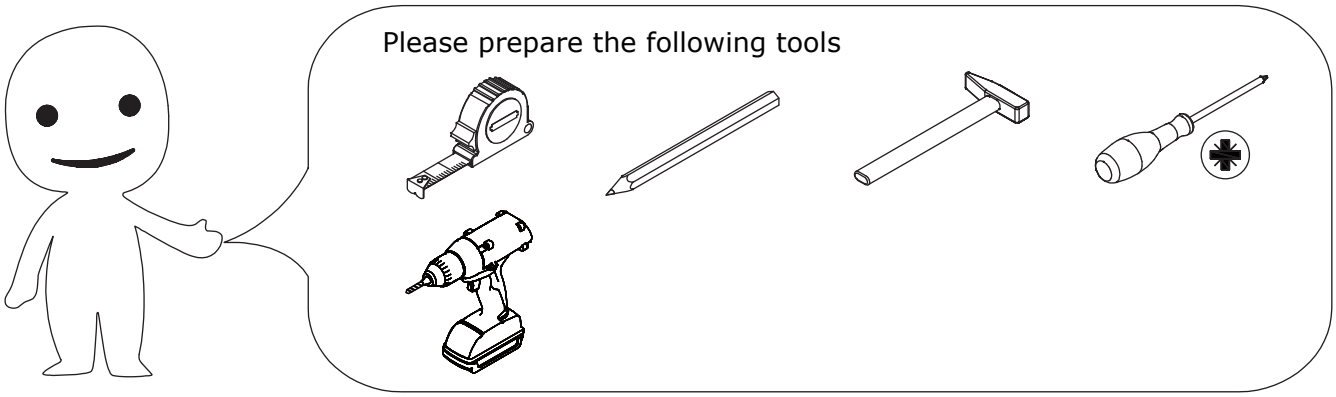


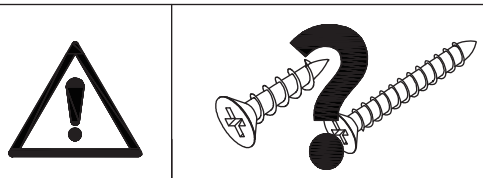

When installing, please carefully confirm whether each screw corresponds to the manual, accessories with similar shapes can be distinguished by size

| A x 145 | B x 145 | C x 145 | D x 118 | E x 73 |
|---|---|---|---|---|
|  CRB1595A | 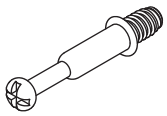 CRA0635B | 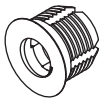 | 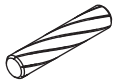 CRF0630A | 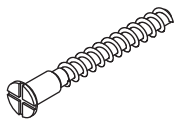 CRC0540A |

| F x 16 | G x 98 | H x 5 | J x 116 | K x 6 |
|---|---|---|---|---|
|  DGA861C |  CRD3514A | 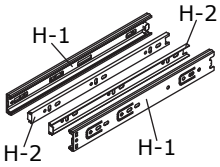  #3508 12'' |  CRD3512A | 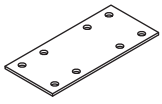 |

| L x 9 | M x 18 | N x 2 | P x 2 | Q x 2 |
|---|---|---|---|---|
| 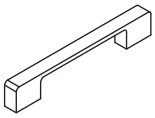 | 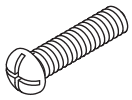 CRE0418A | 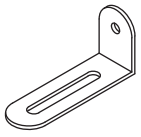 | 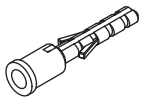 | 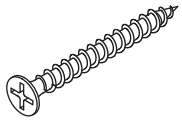 CRD3535A |

| R x 24 | S x 24 | T x 30 | U x 20 | V x 20 |
|---|---|---|---|---|
| 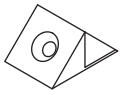 |  CRD0314A | 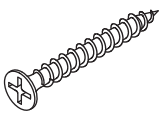 CRD3530A | 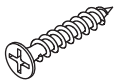 CRD3520A | 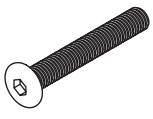 CRG0865A |

| W x 8 | X x 1 | Y x 1 |
|---|---|---|
| 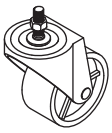 | 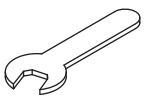 |  |

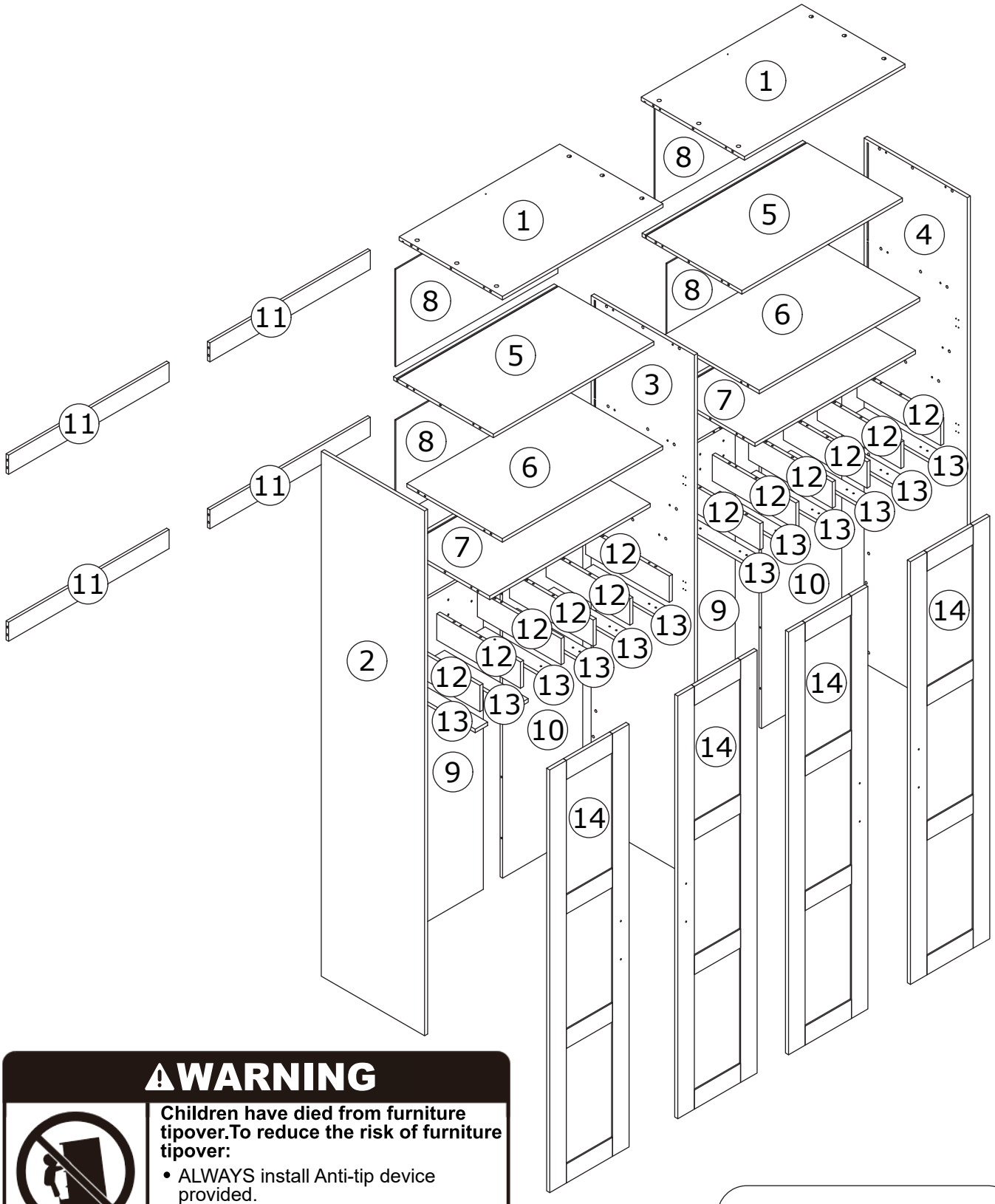


## ⚠WARNING






**Children have died from furniture tipover.To reduce the risk of furniture tipover:**

- ALWAYS install Anti-tip device provided.
- NEVER put a TV on this product.
- NEVER allow children to stand,climb or hang on drawers,doors,or shelves.
- NEVER open more than one drawer at a time.
- Place heaviest items in the lowest drawers.

*This is a permanent label.*
*Do not remove!*

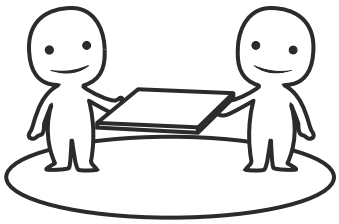

ASSEMBLED BY 2 ADULTS

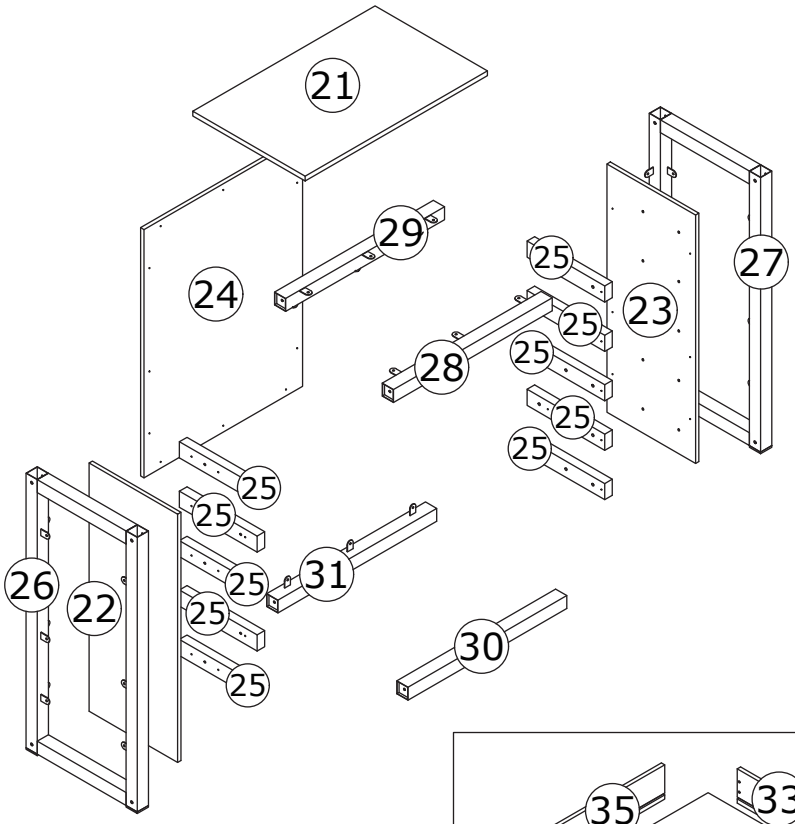


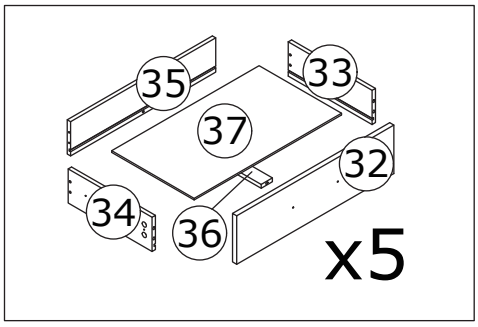


## ⚠WARNING






**Children have died from furniture tipover.To reduce the risk of furniture tipover:**

- ALWAYS install Anti-tip device provided.
- NEVER put a TV on this product.
- NEVER allow children to stand,climb or hang on drawers,doors,or shelves.
- NEVER open more than one drawer at a time.
- Place heaviest items in the lowest drawers.

*This is a permanent label.*
*Do not remove!*

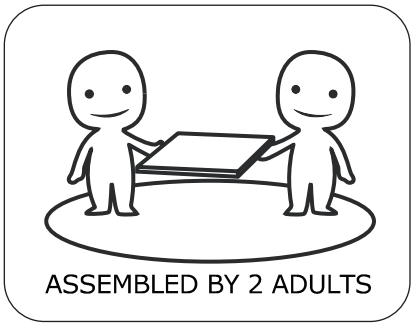

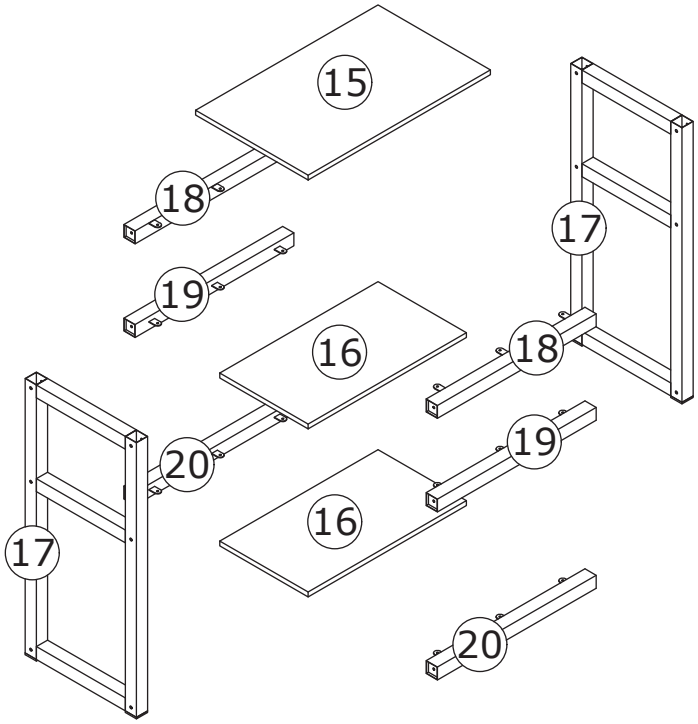


## ⚠WARNING






**Children have died from furniture tipover.To reduce the risk of furniture tipover:**

- ALWAYS install Anti-tip device provided.
- NEVER put a TV on this product.
- NEVER allow children to stand,climb or hang on drawers,doors,or shelves.
- NEVER open more than one drawer at a time.
- Place heaviest items in the lowest drawers.

*This is a permanent label.*
*Do not remove!*

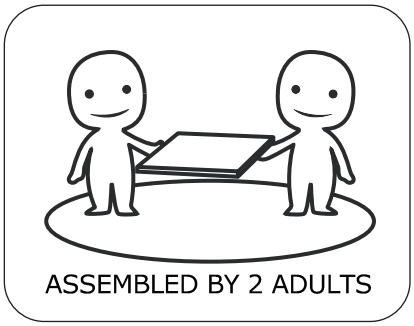

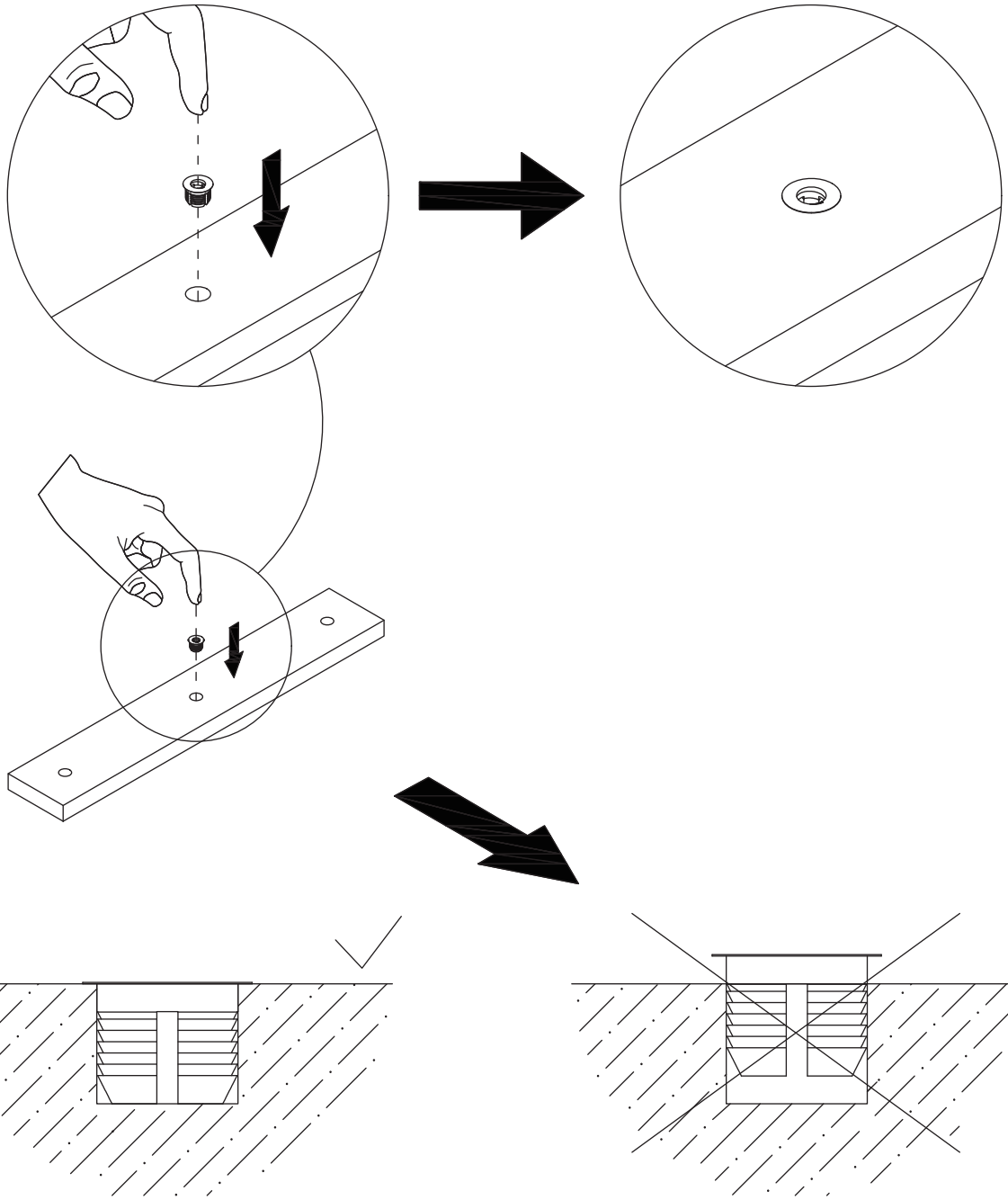



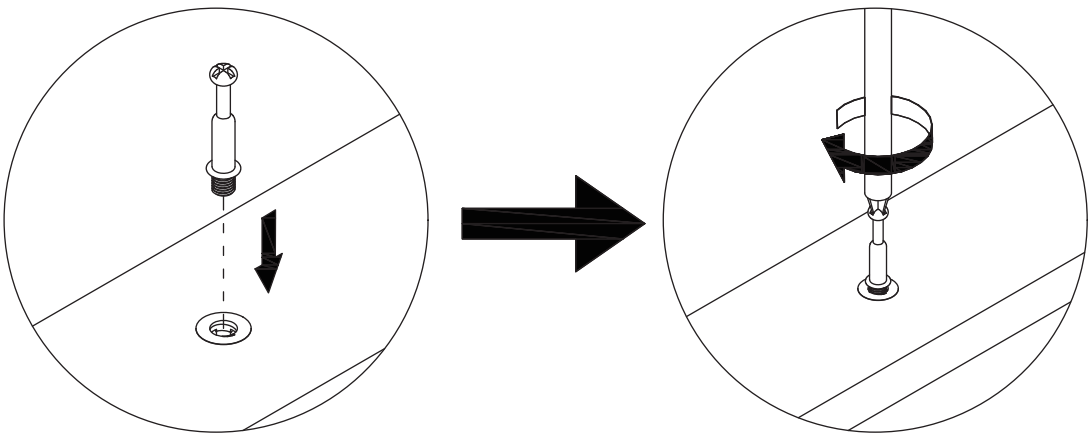

**Slides Must Be Separated Before Assembly.**
**After Separated, Set Aside Until Needed for Assembly.**

Las diapositivas deben separarse antes del montaje.
Después de la separación, déjelo a un lado hasta que sea necesario.

Les glissières doivent être séparées avant l'assemblage.
Après la séparation, mettez de côté jusqu'au moment de l'assemblage.

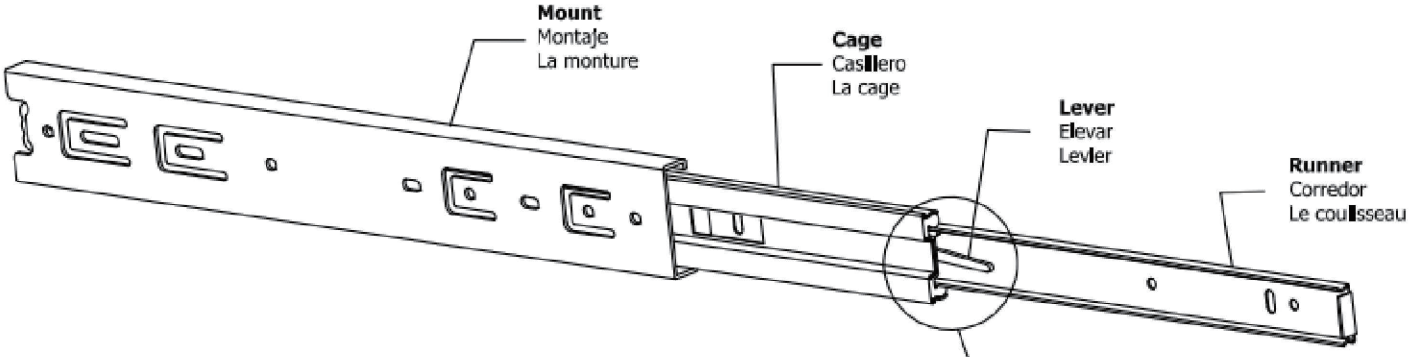


**STEP 1: Extend Slide**
Extender la diapositiva
Extendre la diapositive

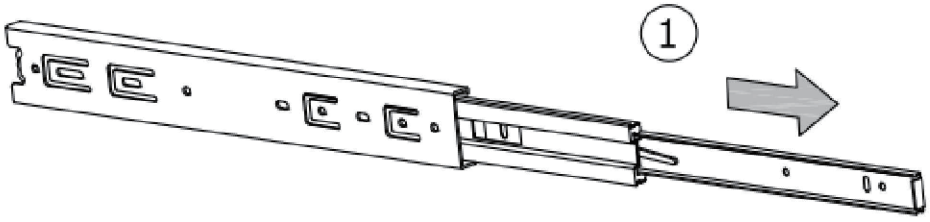


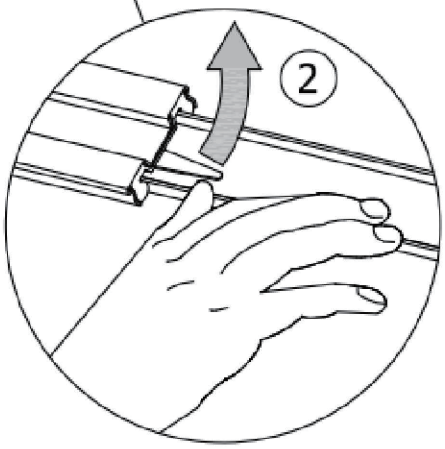


**STEP 2: Push Lever UP**
Empujar hacia arriba
Lever le levier

**STEP 3: Remove Runner**
Quitar el corredor
Enlever le coureur

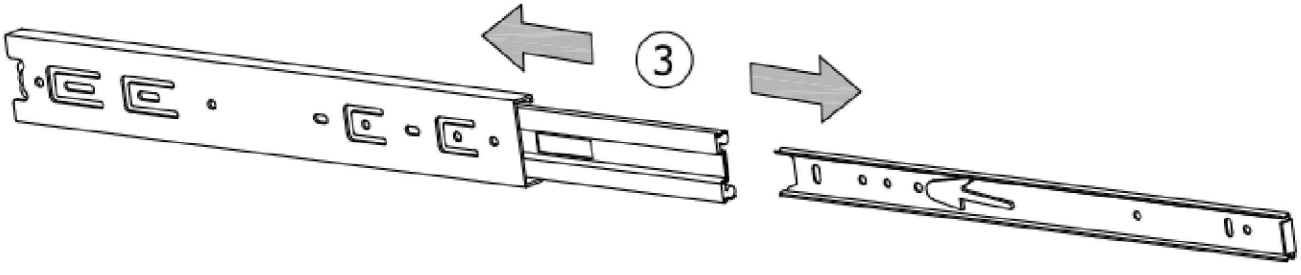

1

| B x 44 | C x 44 | |
|---|---|---|
| 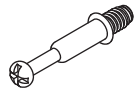 CRA0635B |  | 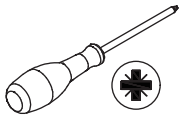 |

First, install plug (B) onto panel 7, then screw self-tapping rod (C) into panel 7.

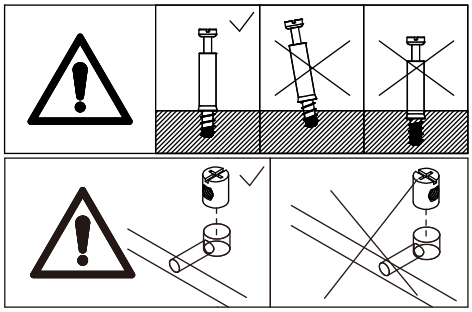

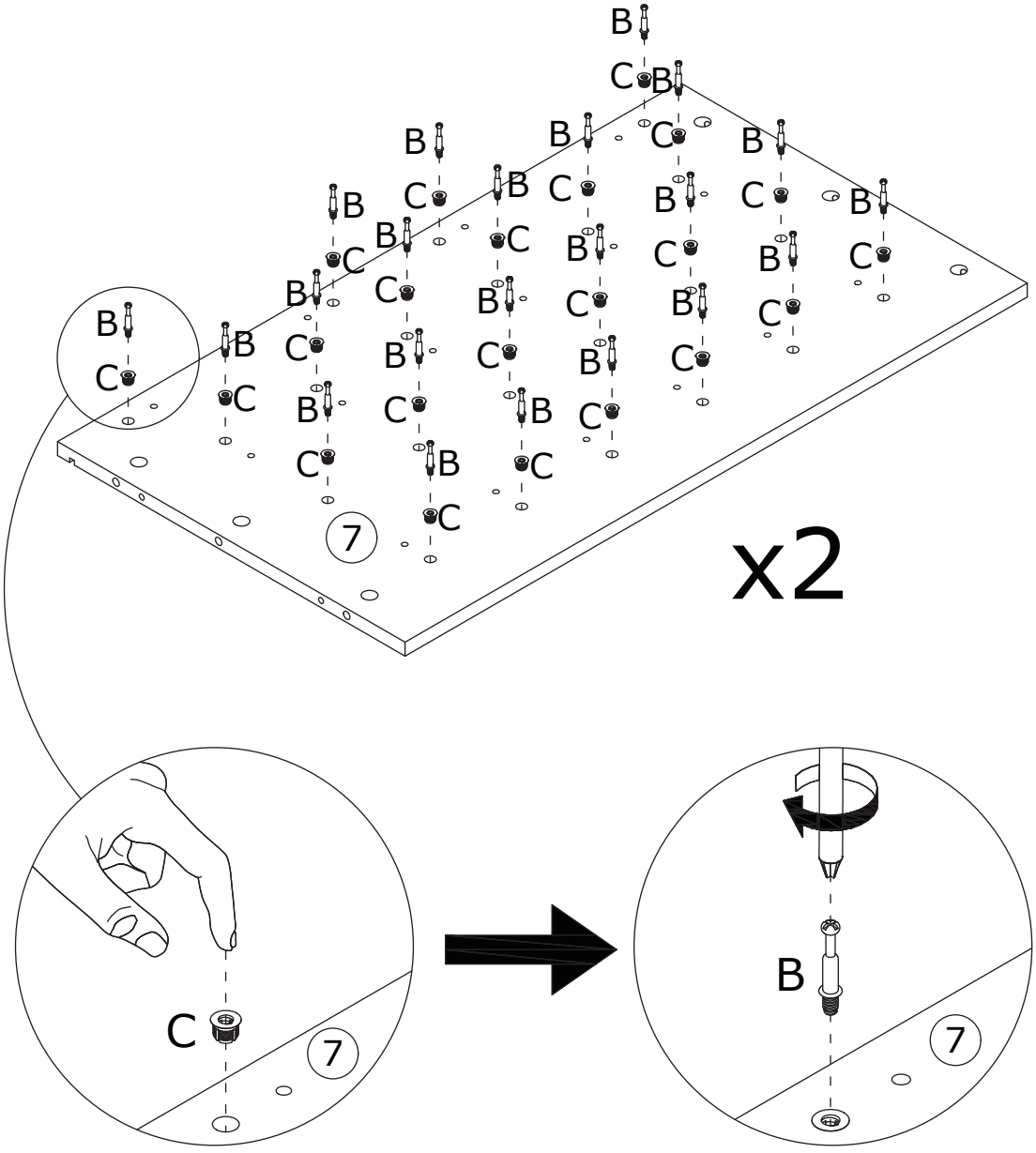

# 2

| A x 36 | D x 24 | |
|---|---|---|
|  CRB1595A | 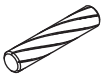 CRF0630A | 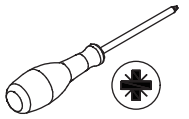 |

Connect panel 12 to panel 7 using wooden dowel (D), then tighten by turning cam lock (A) clockwise.

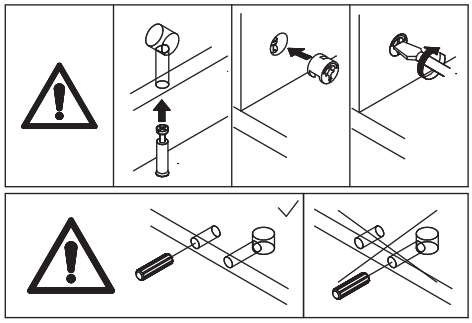

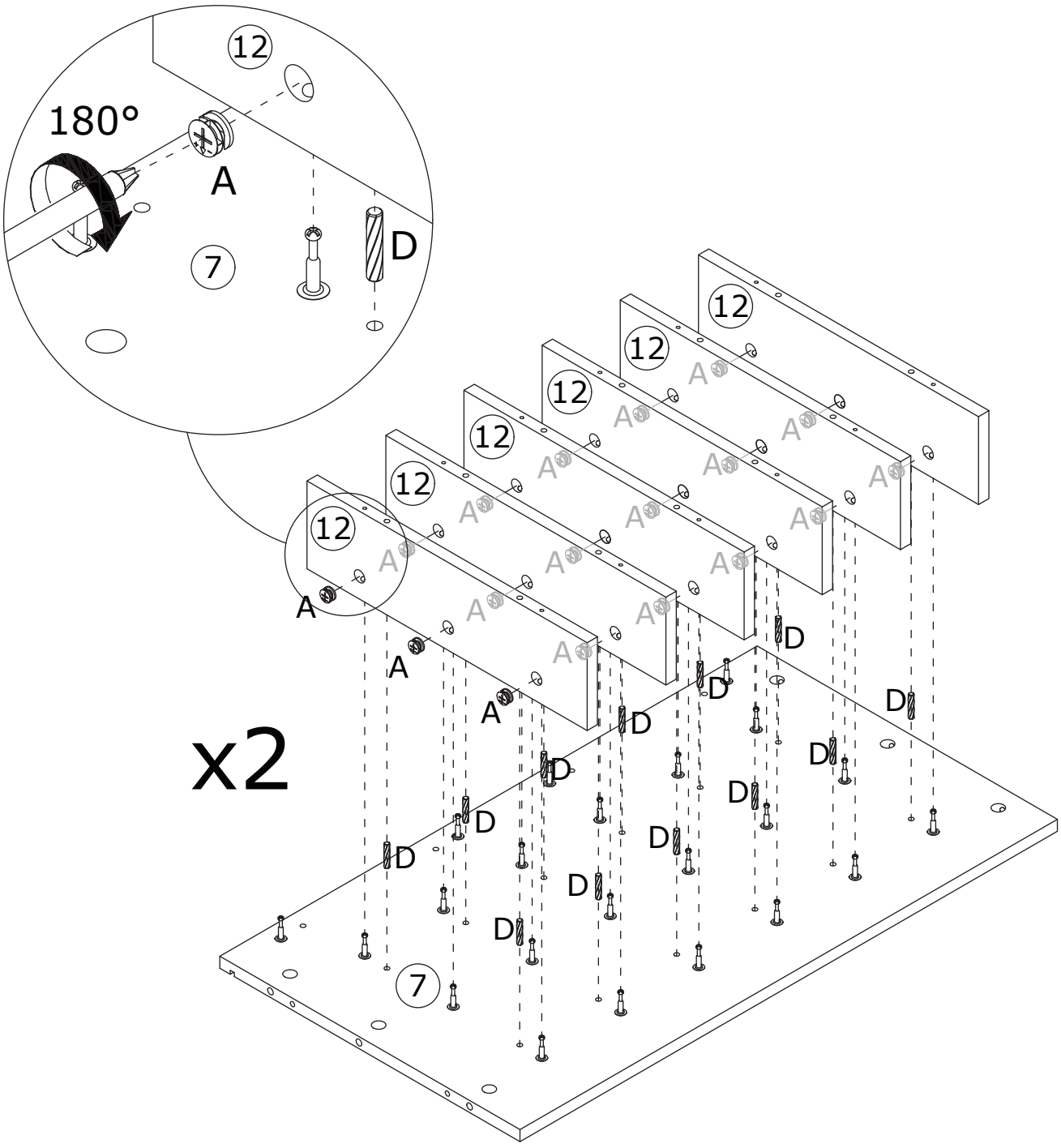

3

D x 10

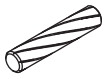

CRF0630A

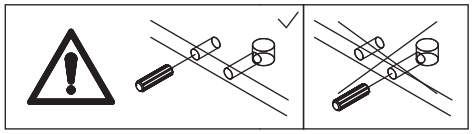

Connect panel 9 to panel 10 using wooden dowel (D).

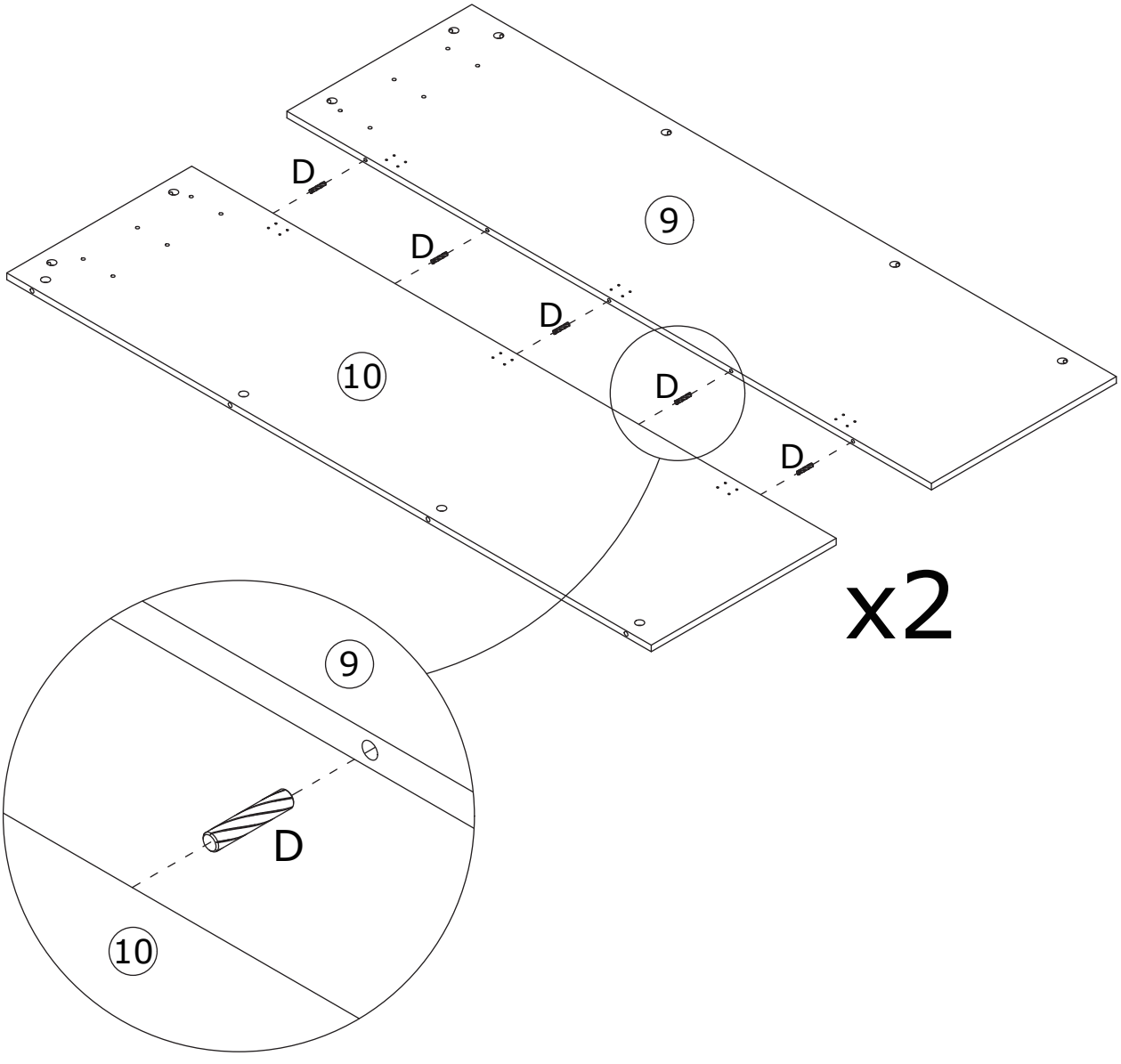

4

| J x 48 | K x 6 | |
|---|---|---|
|  CRD3512A | 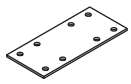 | 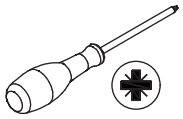 |

| | G | J | S |
|---|---|---|---|
|  |  CRD3514A |  CRD3512A |  CRD0314A |

Secure iron sheet (K) to panel 9 and 10 using screw (J).

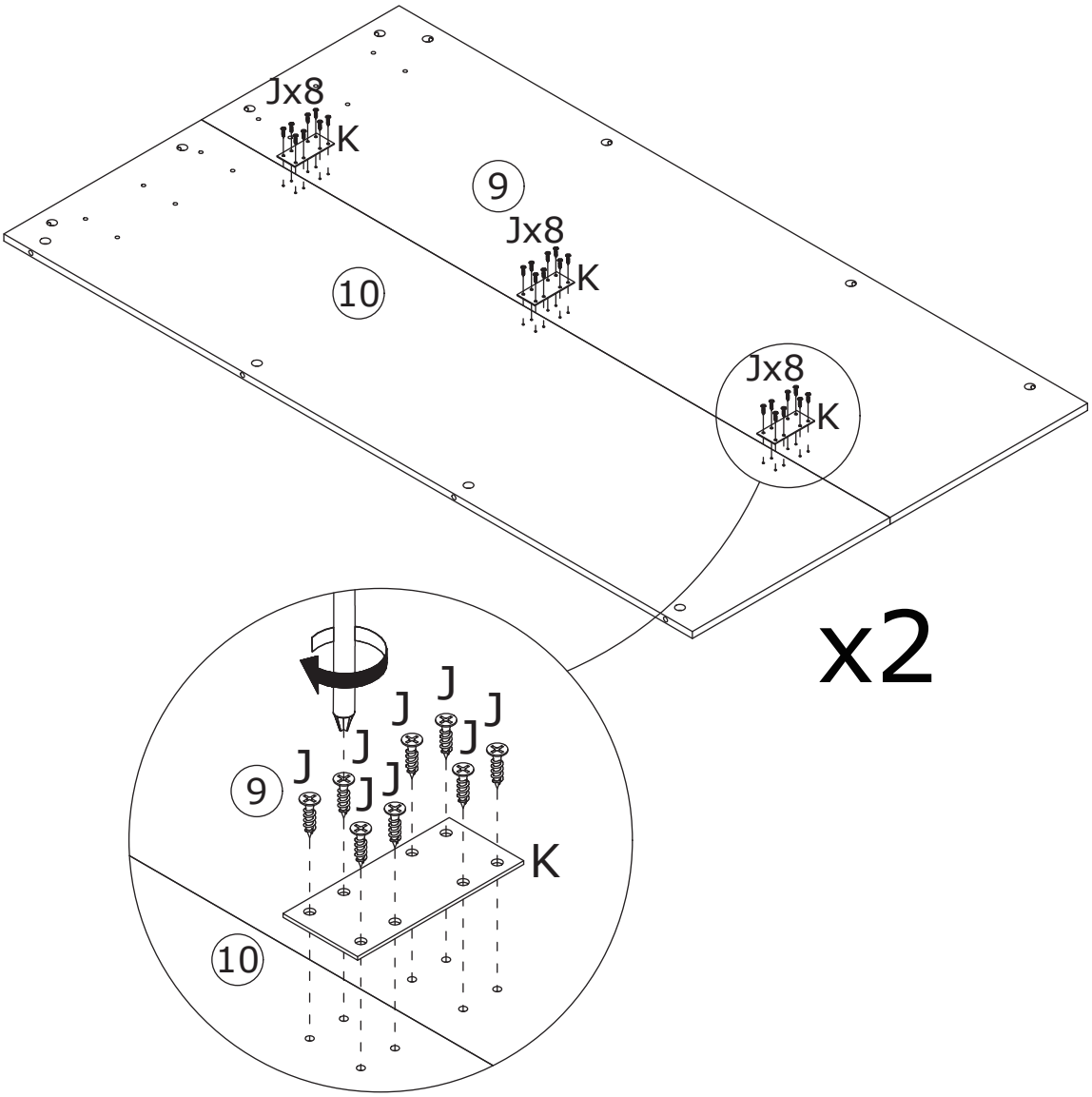

5

| A x 8 | D x 8 | |
|---|---|---|
|  CRB1595A | 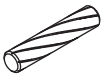 CRF0630A | 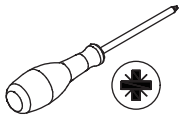 |

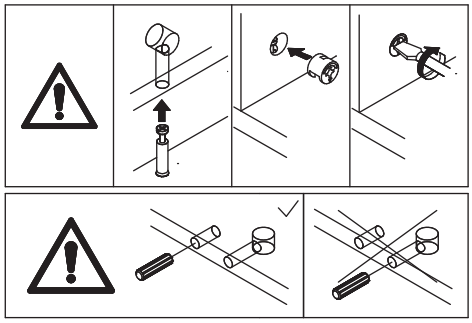

Connect panel 7 to panel 9 and 10 using wooden dowel (D), then tighten by turning cam lock (A) clockwise.

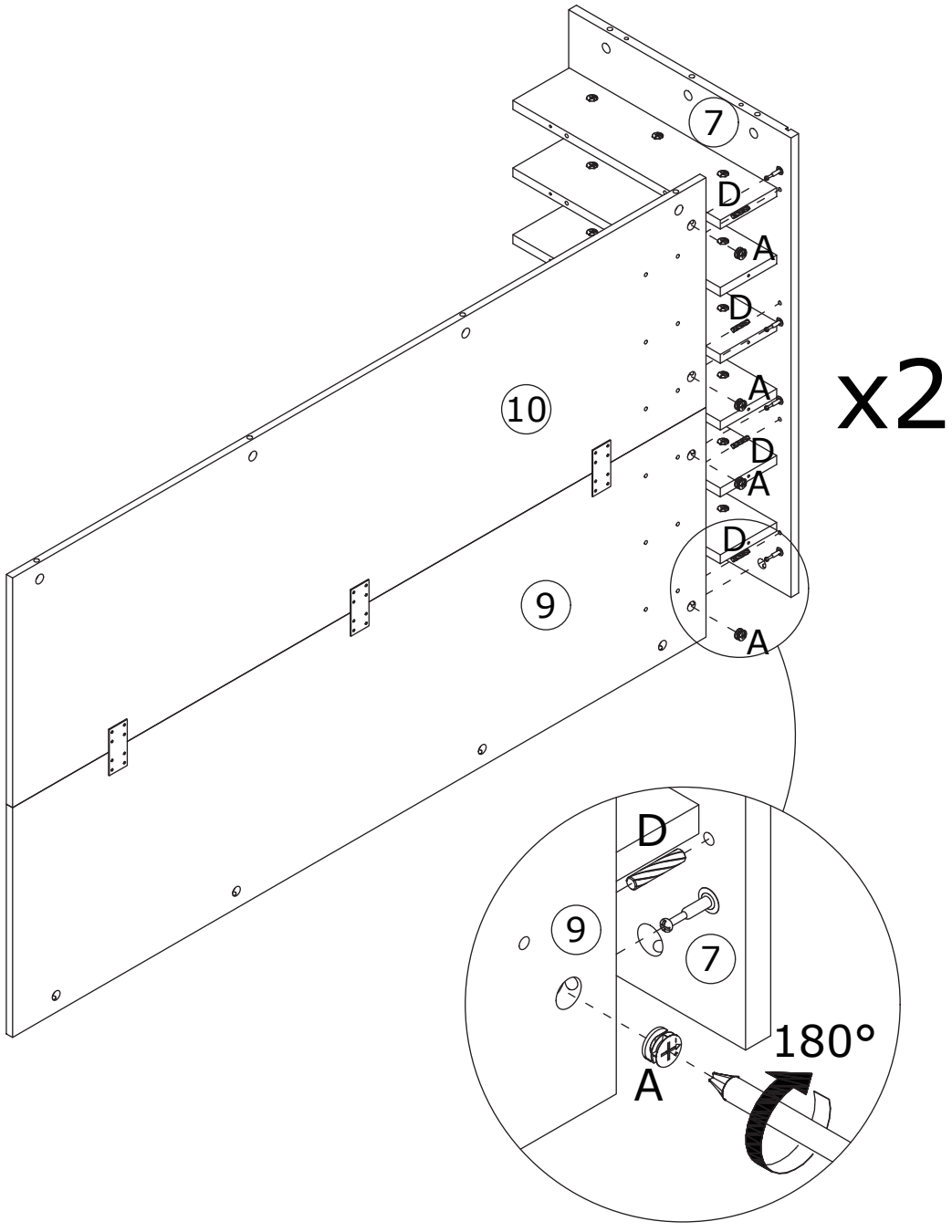

6

E x 12

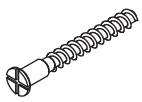

CRC0540A

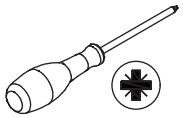

Secure panel 9 and 10 to panel 12 using screw (E).

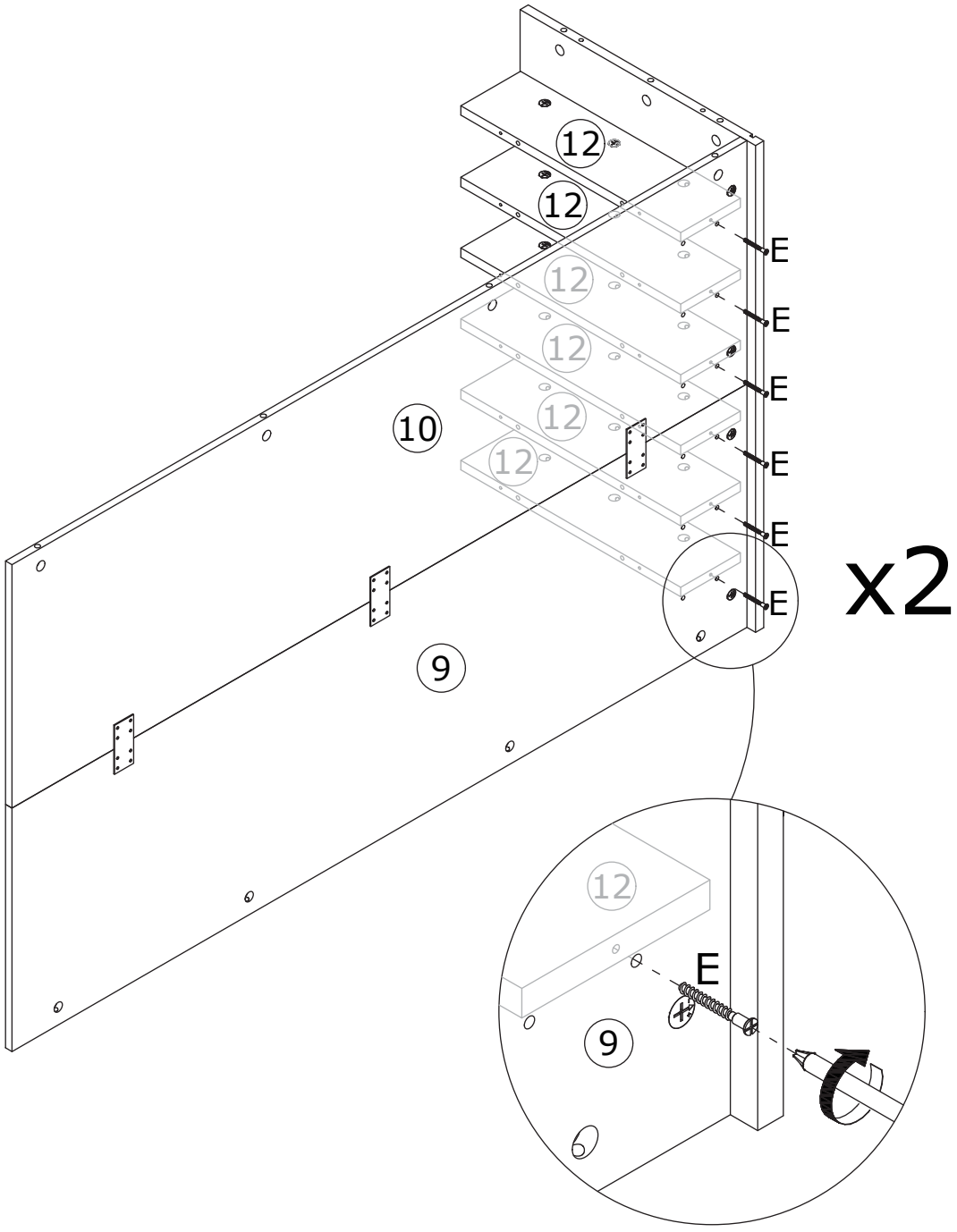

# 7

| B x 19 | C x 19 | |
|---|---|---|
| 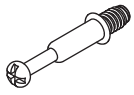 CRA0635B |  | 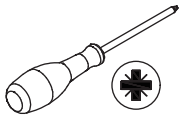 |

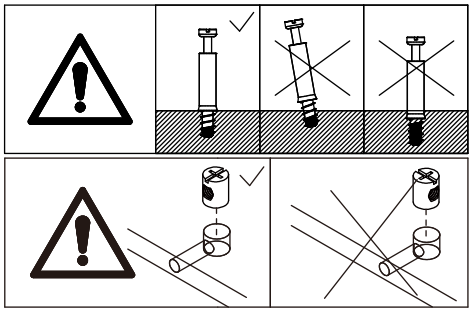

First, install plug (B) onto panel 2, then screw self-tapping rod (C) into panel 2.

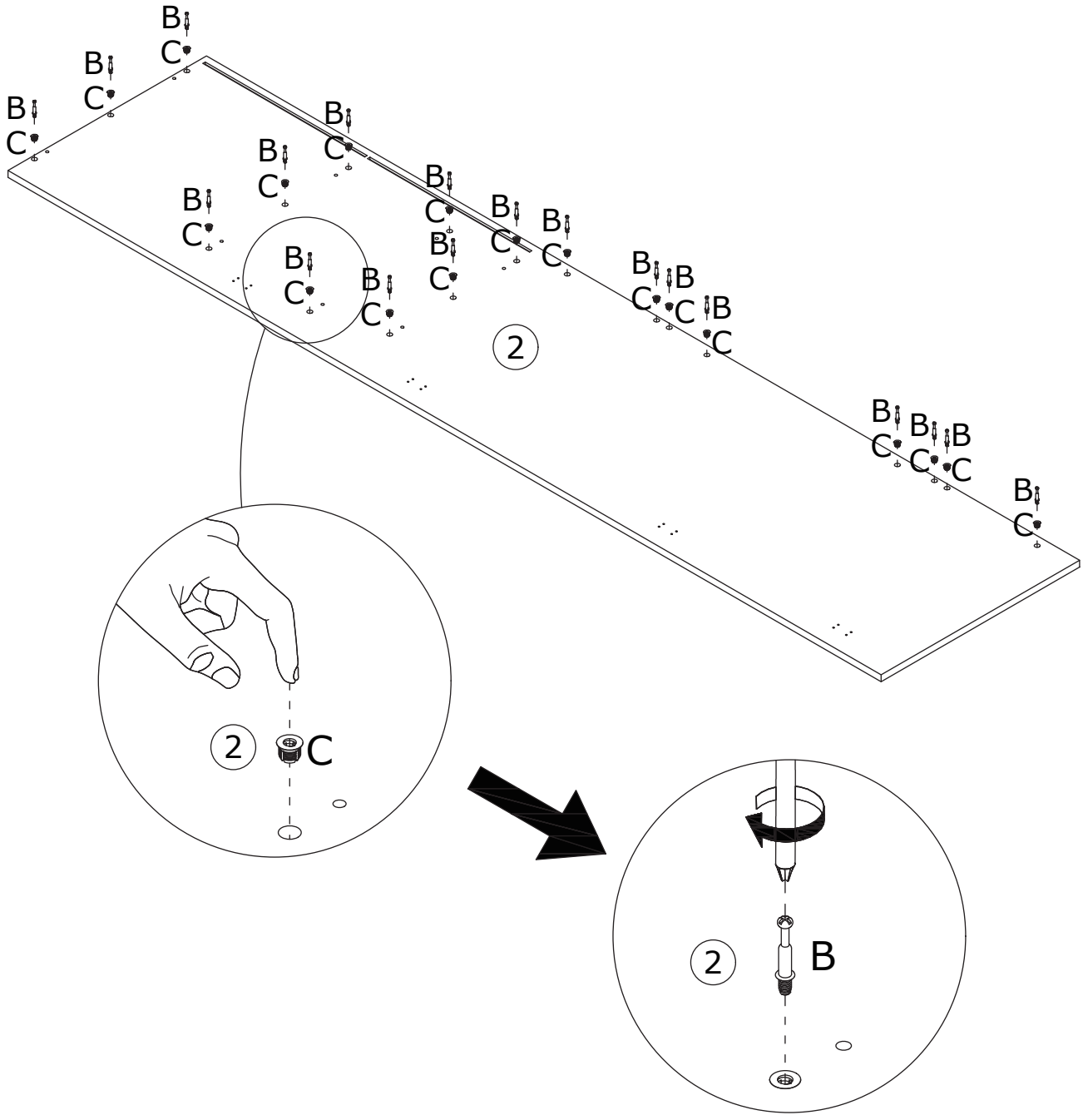

# 8

| A x 15 | D x 8 | |
|---|---|---|
|  CRB1595A | 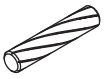 CRF0630A | 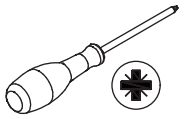 |

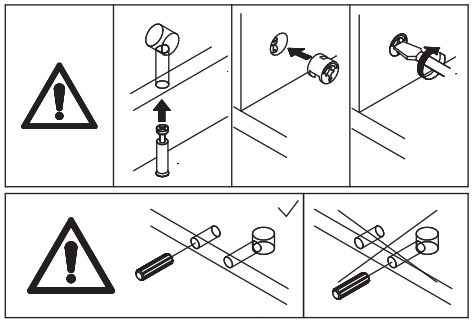

Connect panel 1, 5, 6, 7, and 9 to panel 2 using wooden dowel (D), then tighten by turning cam lock (A) clockwise.

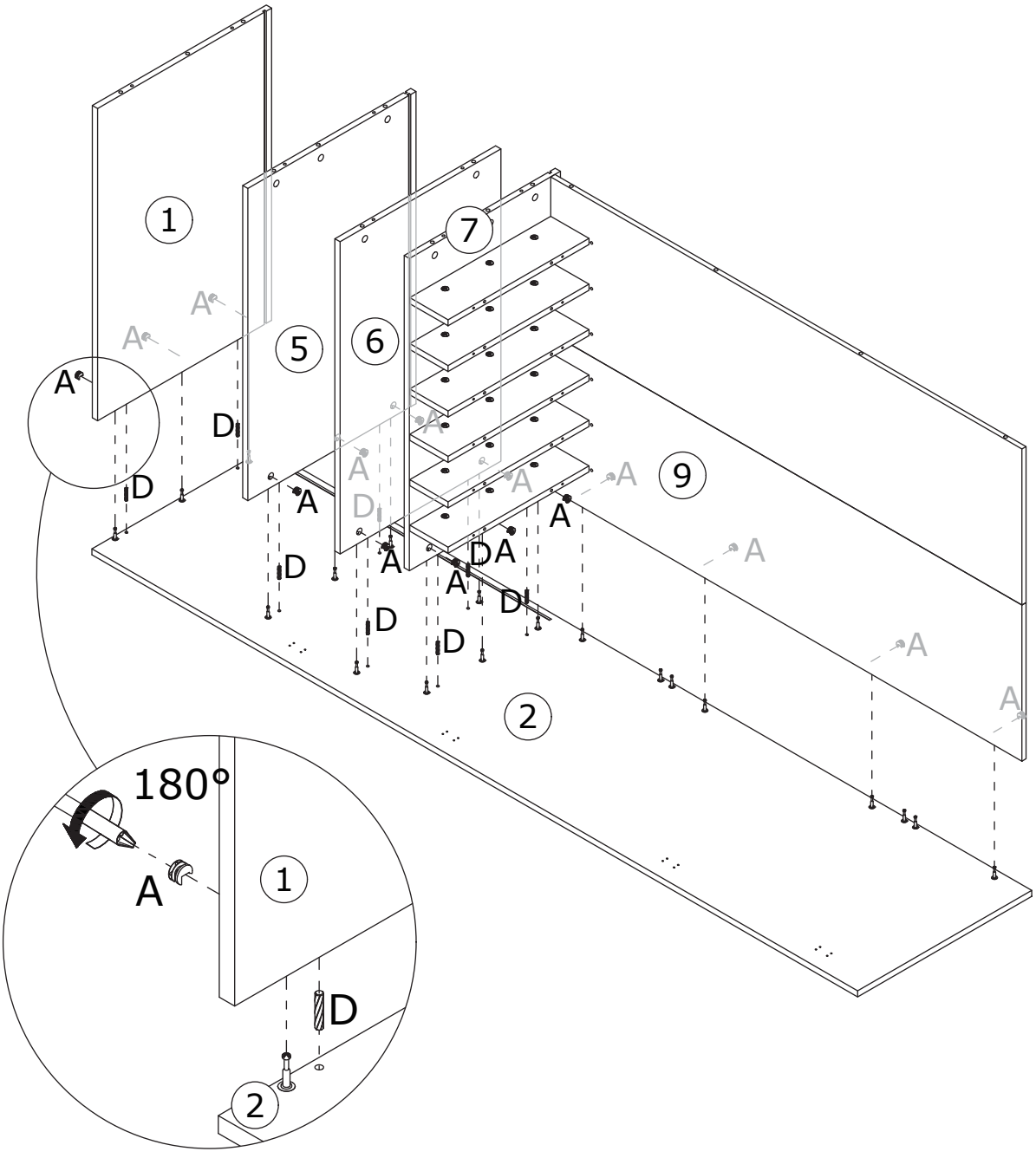

9

A x 4



CRB1595A

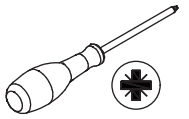

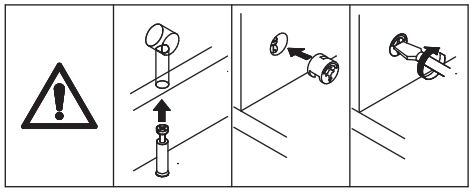

Connect panel 11 to panel 2, then tighten by turning cam lock (A) clockwise.

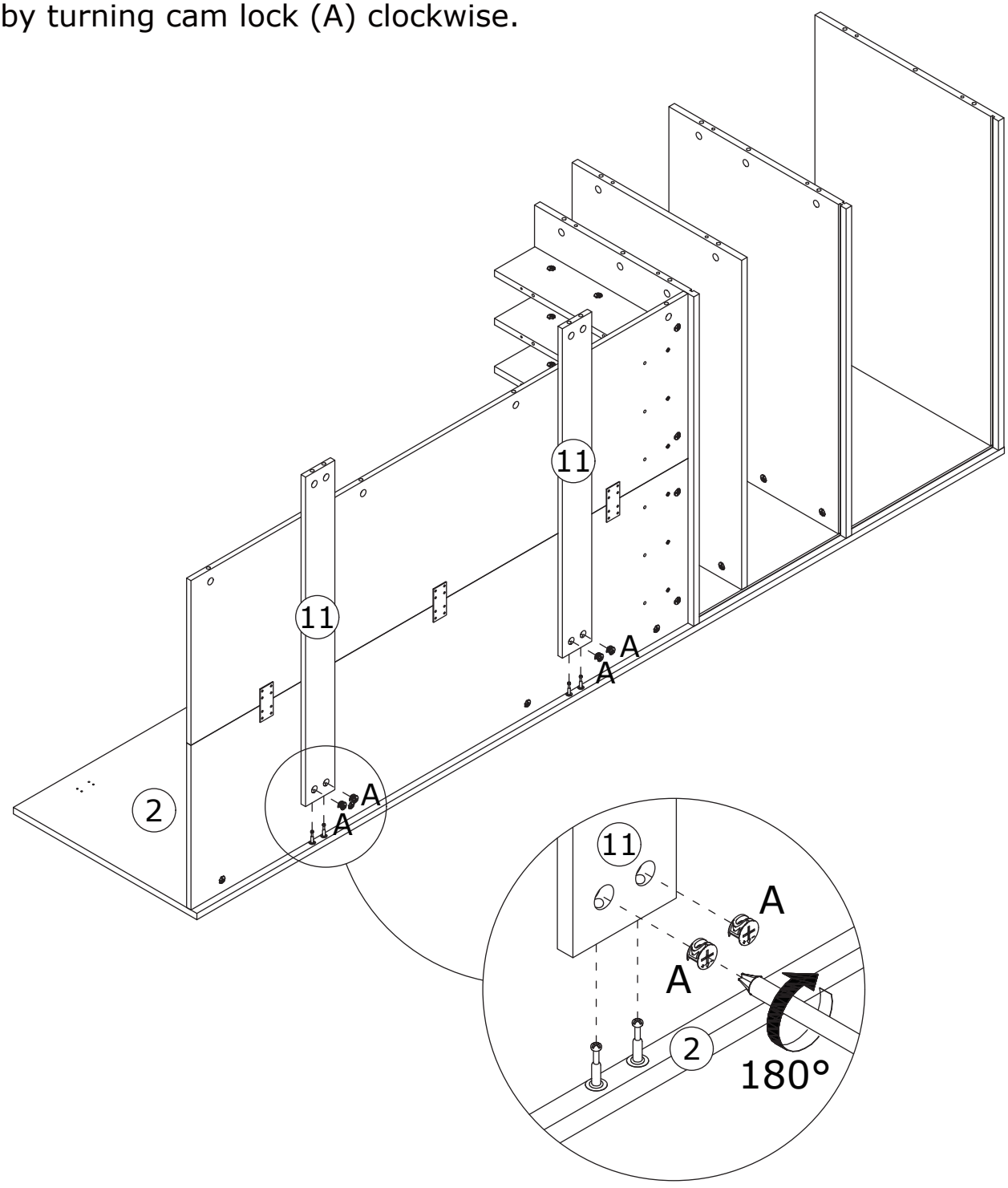

10

Insert panel 8 into the available slots.

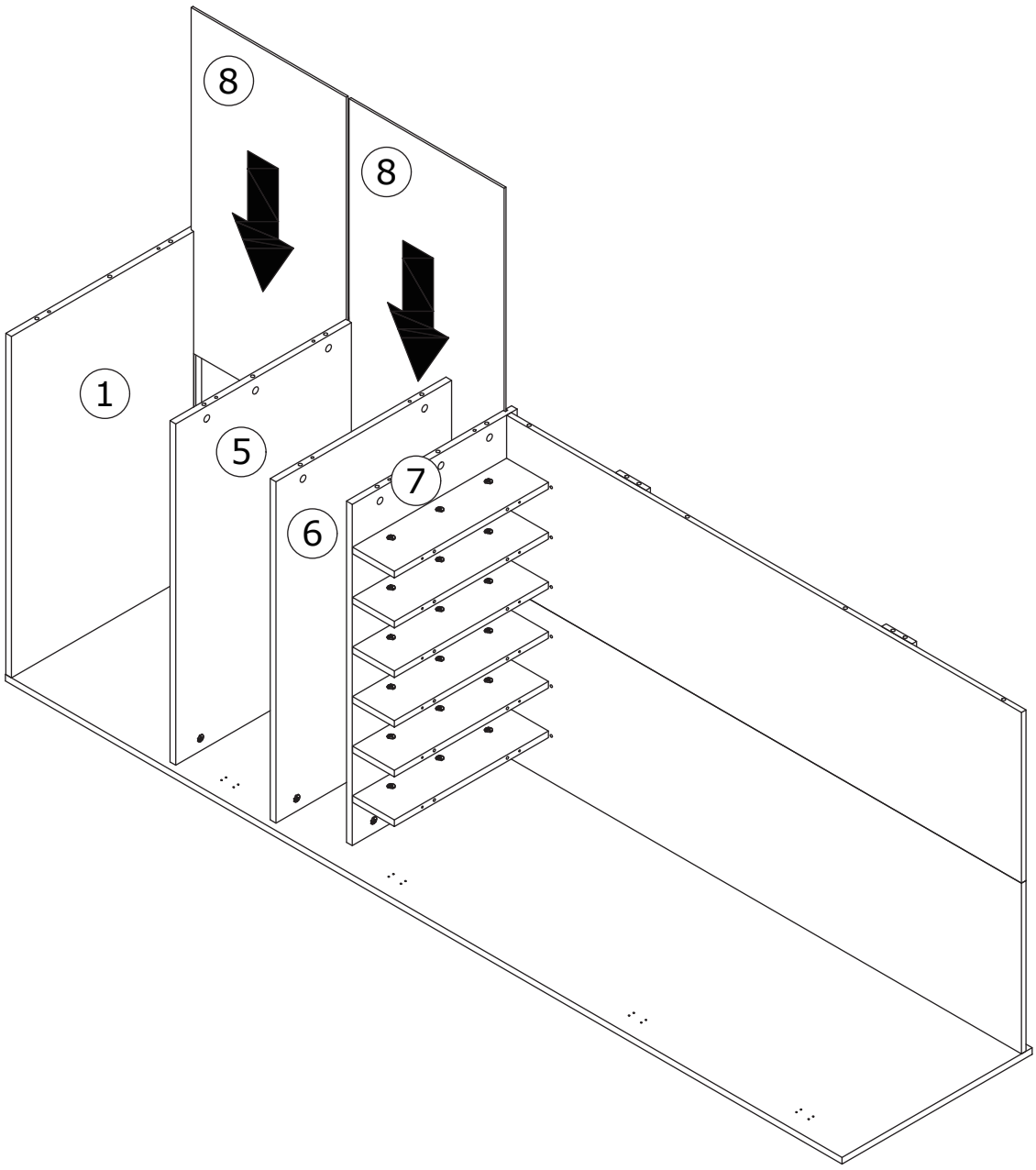

# 11

| B x 38 | C x 38 | |
|---|---|---|
| 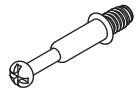 CRA0635B |  | 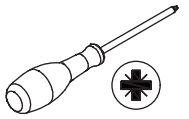 |

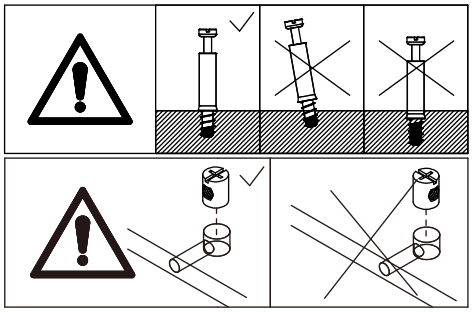

First, install plug (B) onto **both sides of** panel 3, then screw self-tapping rod (C) into panel 3.

**Flip to the other side**

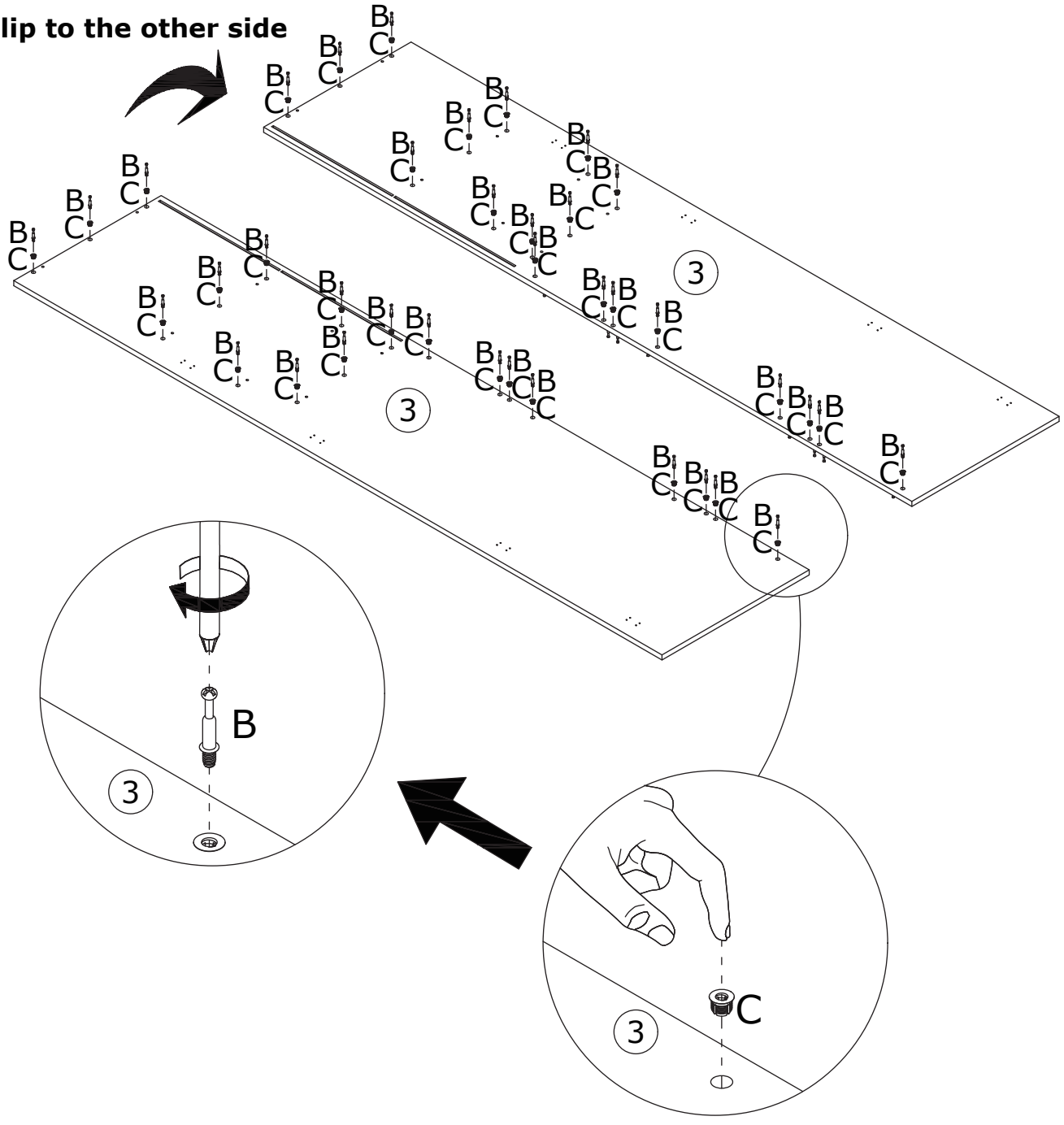

12

D x 8

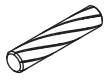

CRF0630A

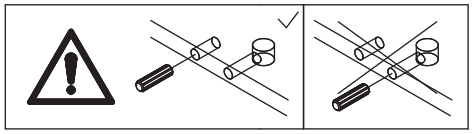

Insert wooden dowel (D) to panel 1, 5, 6, and 7.

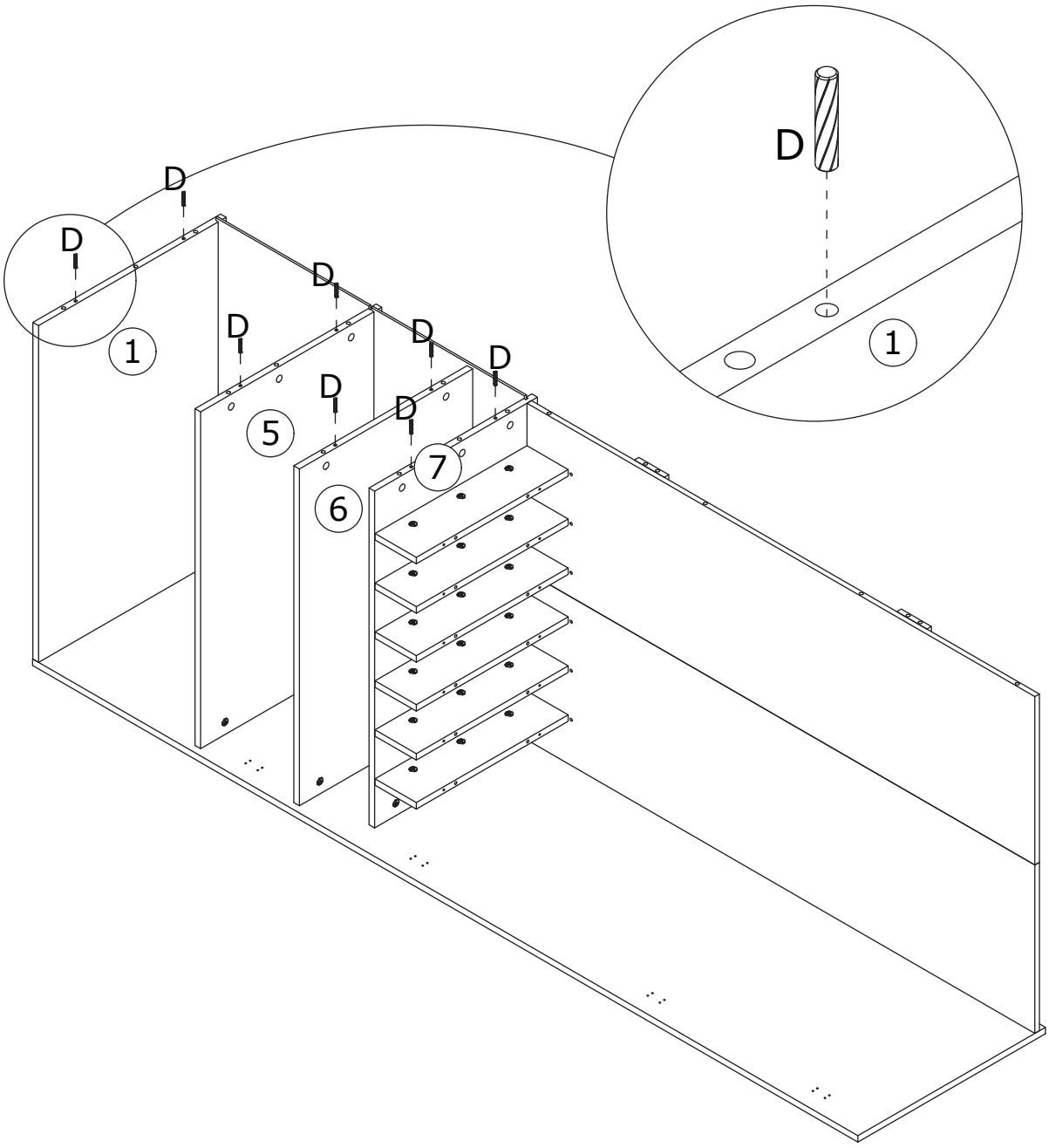

13

A x 19



CRB1595A

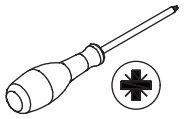

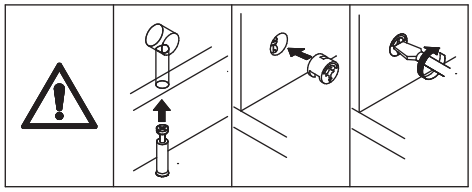

Connect panel 3 to the mounting unit, then tighten by turning cam lock (A) clockwise.

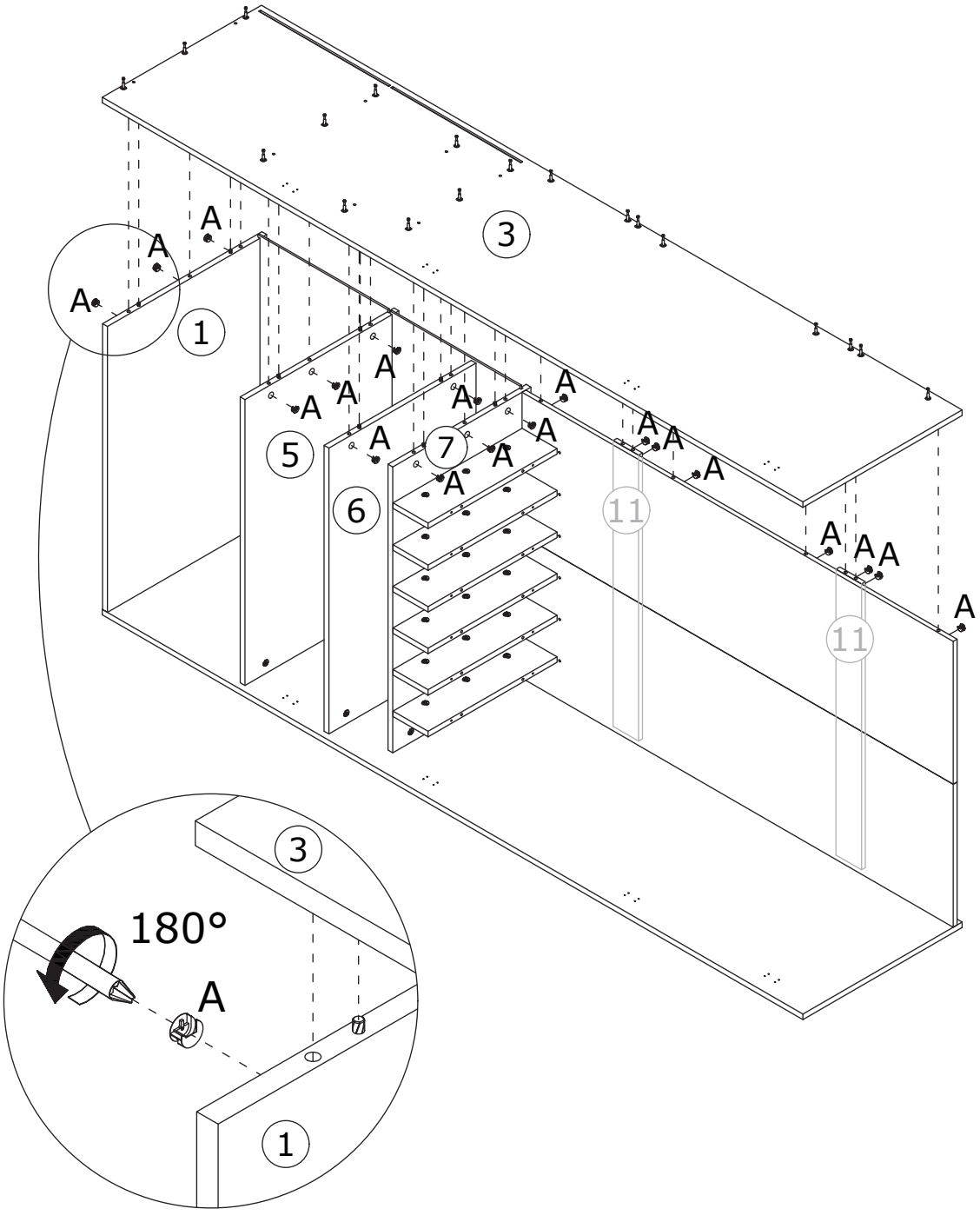

14

| B x 19 | C x 19 | |
|---|---|---|
| 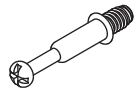 CRA0635B |  | 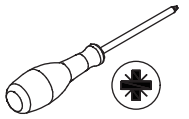 |

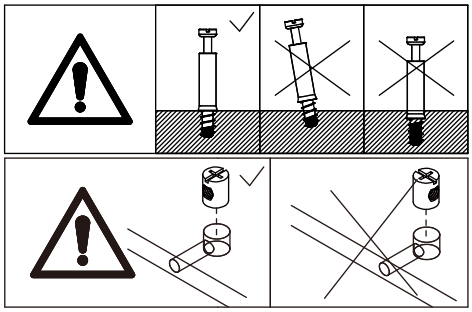

First, install plug (B) onto panel 4, then screw self-tapping rod (C) into panel 4.

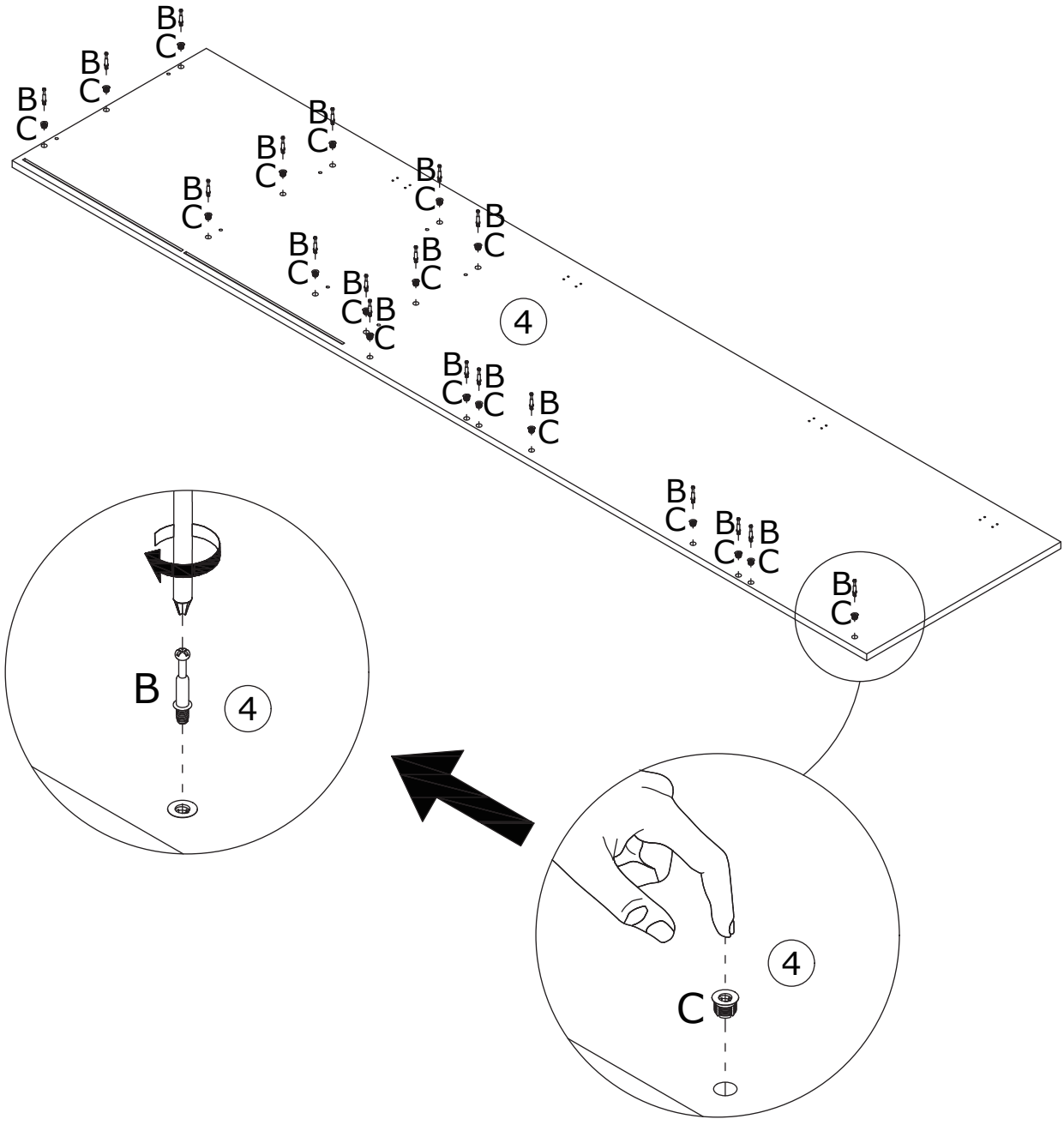

15

| A x 15 | D x 8 | |
|---|---|---|
|  CRB1595A | 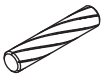 CRF0630A | 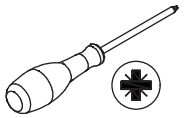 |

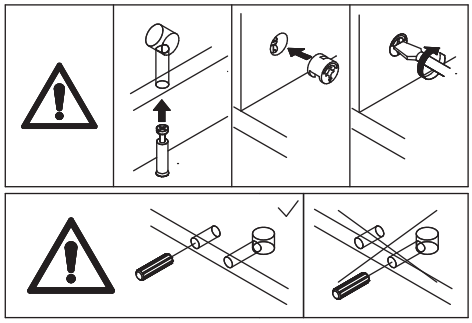

Connect panel 1, 5, 6, 7, and 10 to panel 4 using wooden dowel (D), then tighten by turning cam lock (A) clockwise.

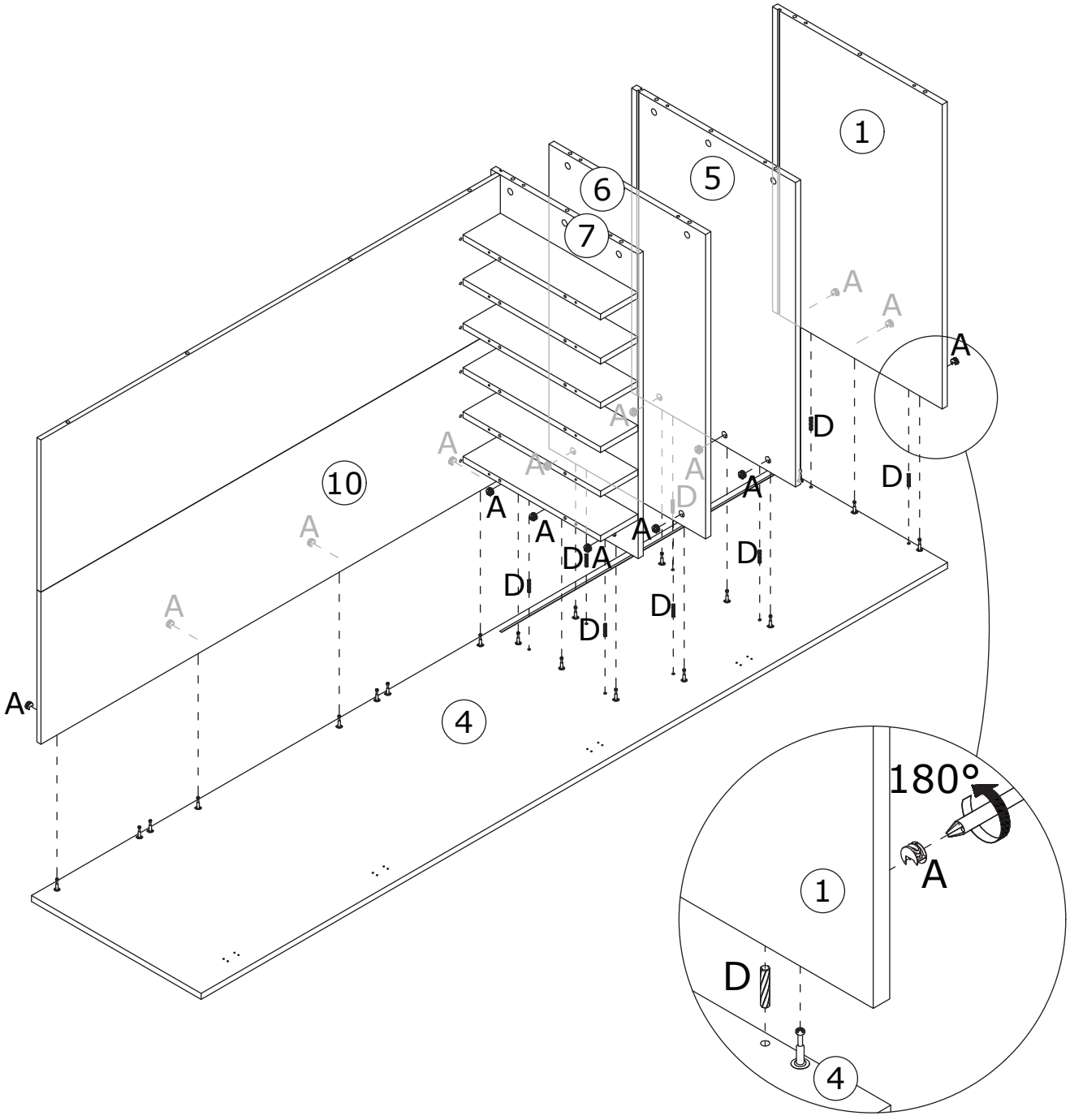

16

A x 4



CRB1595A

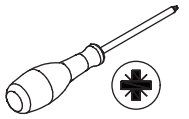

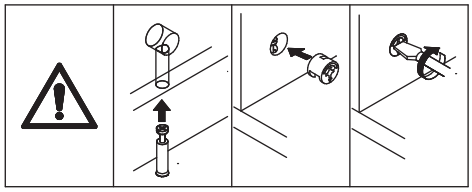

Connect panel 11 to panel 4, then tighten by turning cam lock (A) clockwise.

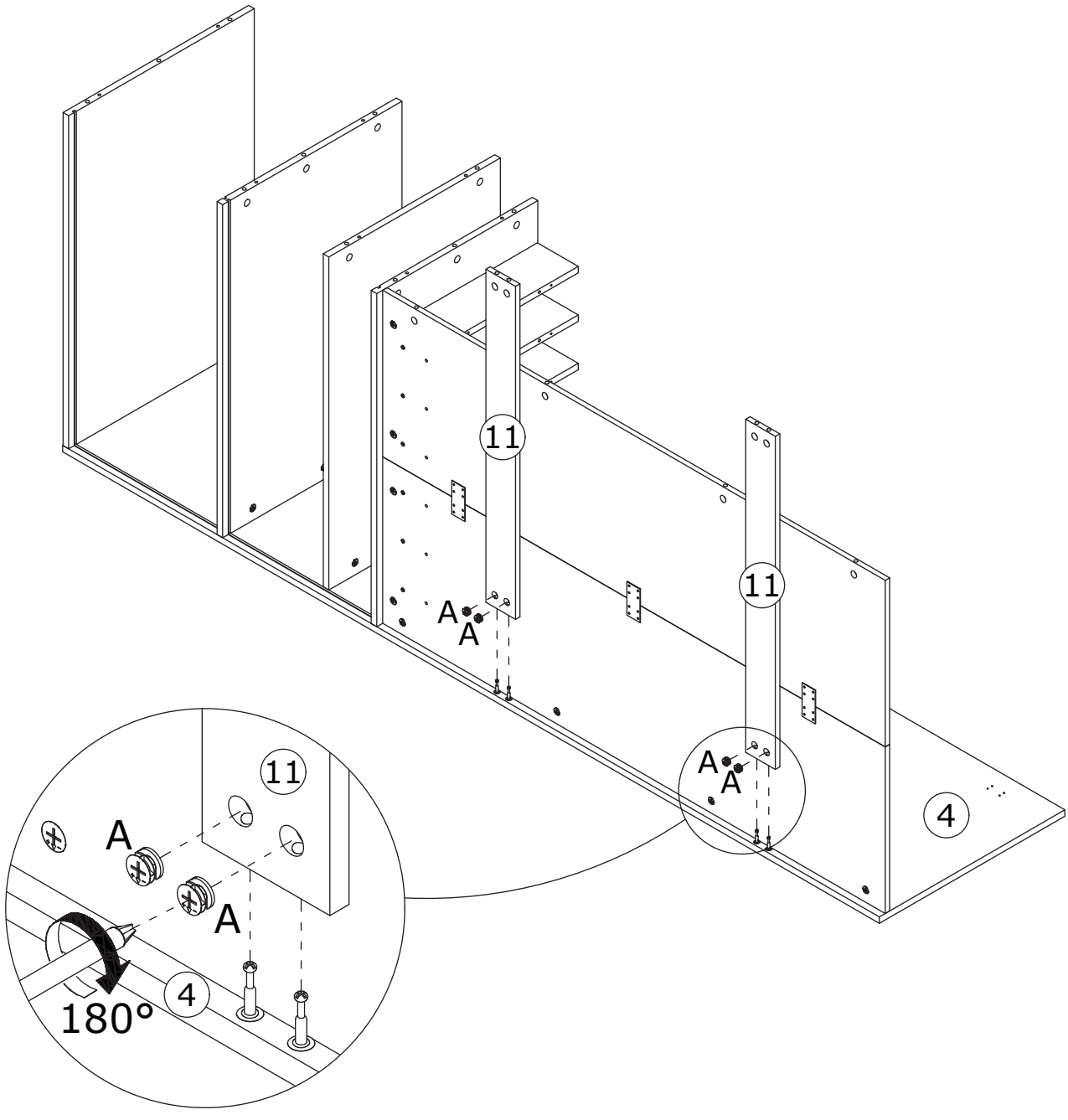

17

Insert panel 8 into the available slots.

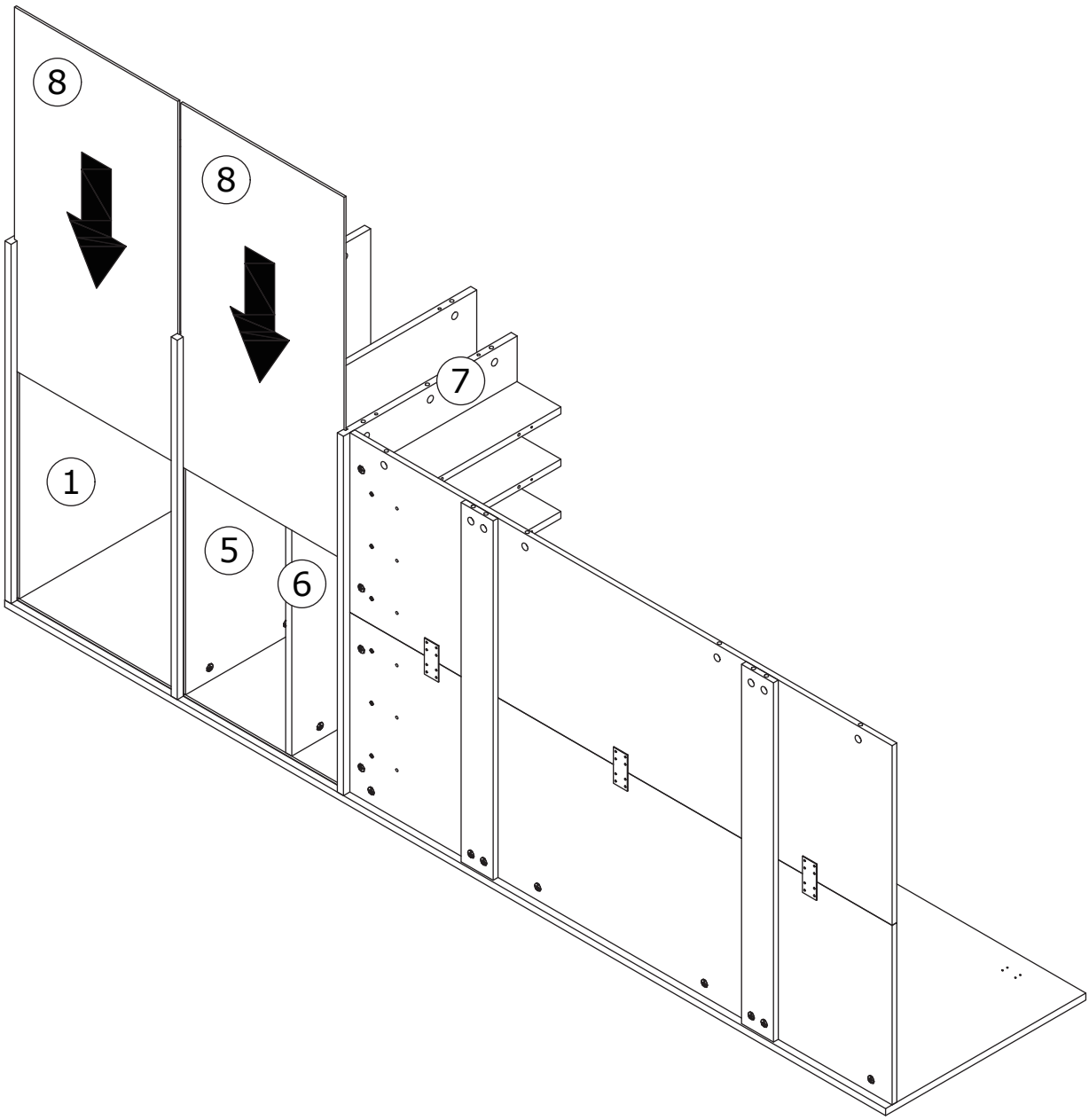

18

D x 8

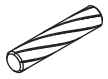

CRF0630A

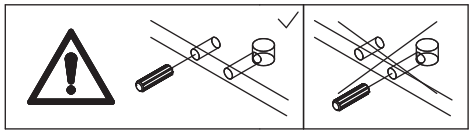

Insert wooden dowel (D) into panel 1, 5, 6, and 7.

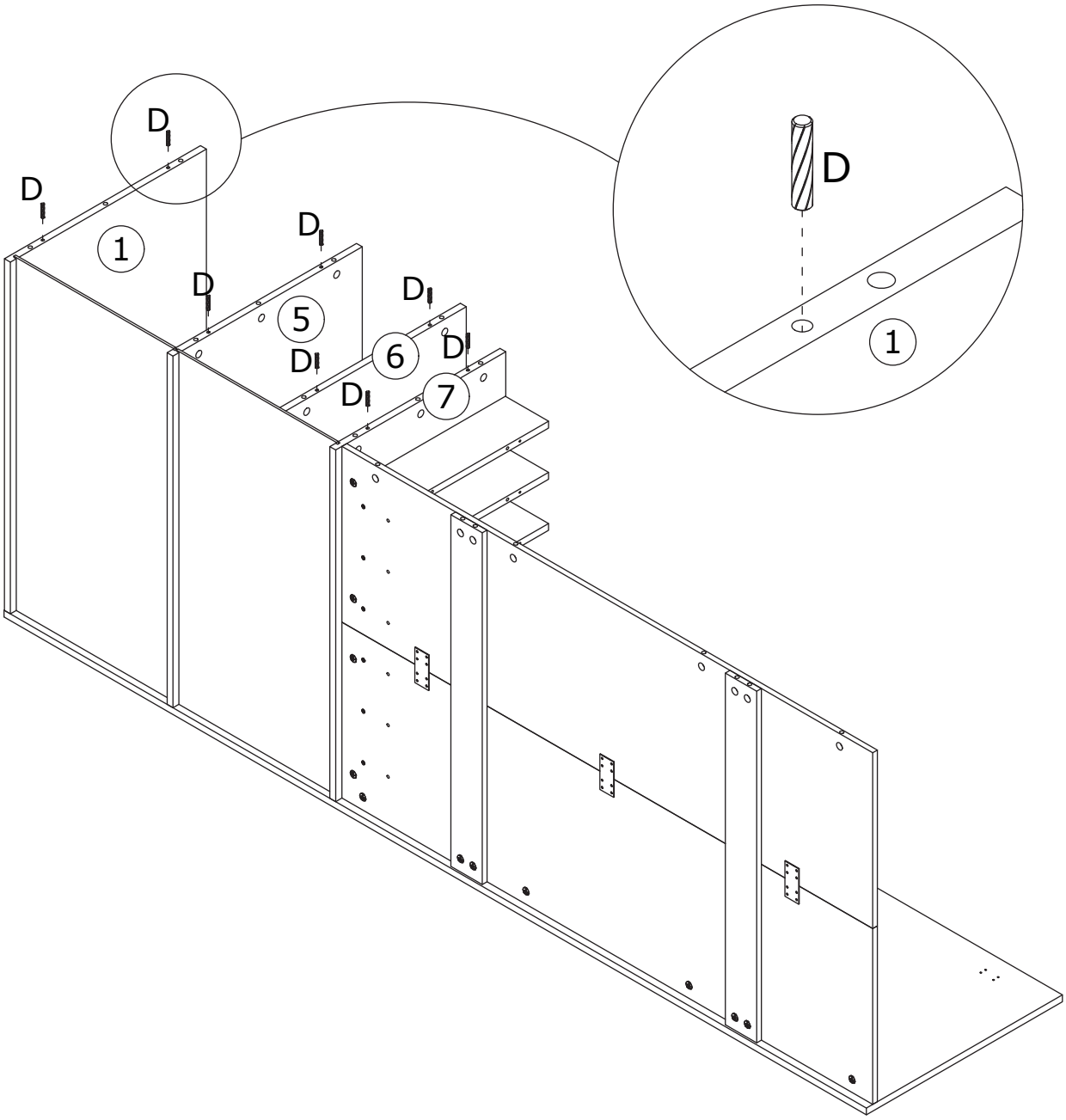

# 19

A x 19



CRB1595A

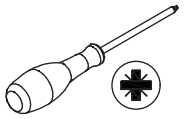

Connect the two mounting units, then tighten by turning cam lock (A) clockwise.

**Be careful not to pinch your fingers on the cabinet.**

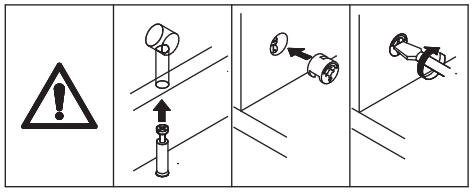

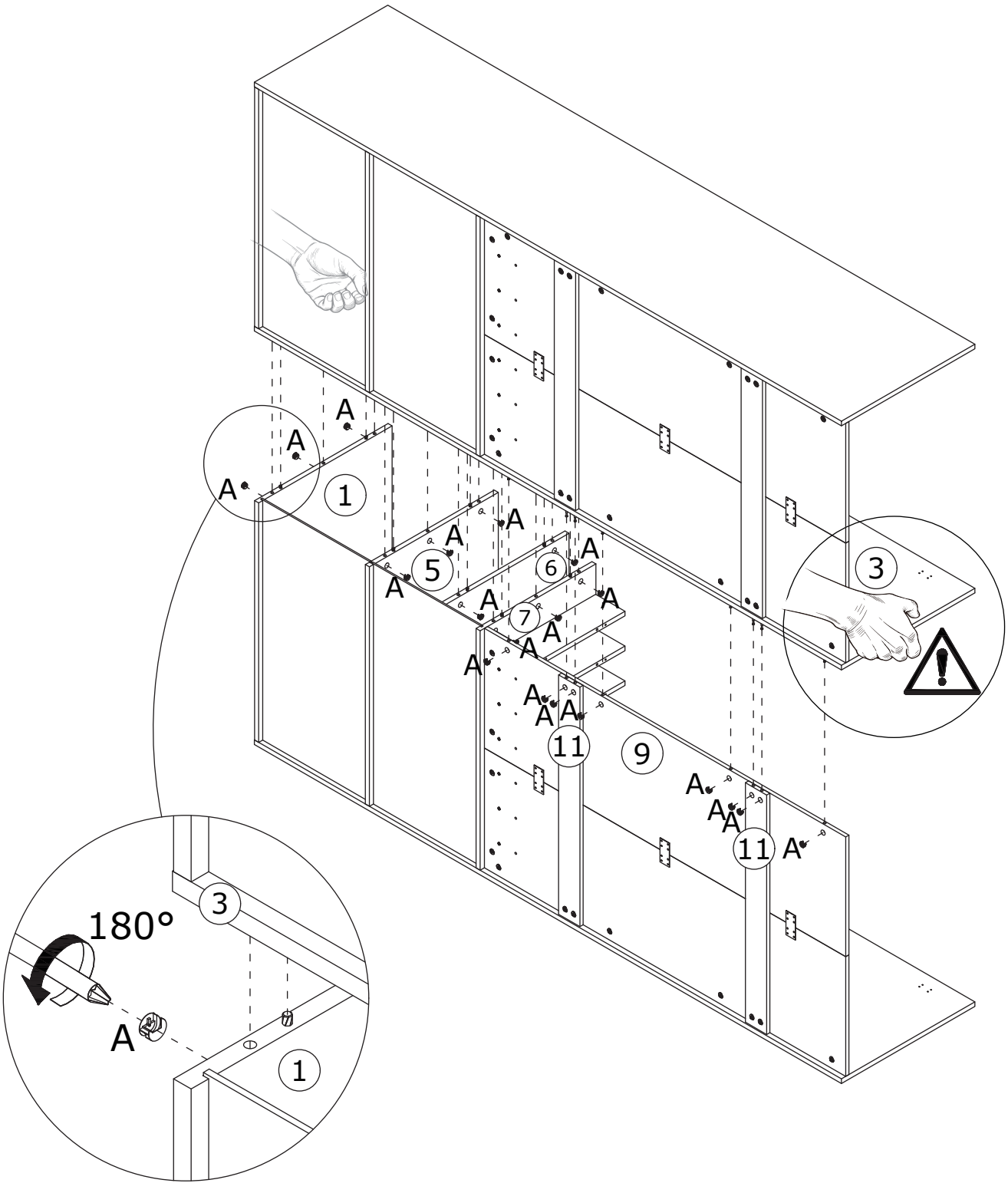

# 20

| D x 24 | E x 24 | |
|---|---|---|
| 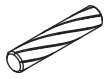 | 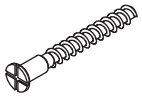 | 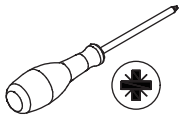 |
| CRF0630A | CRC0540A | |

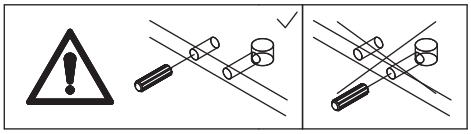

Connect panel 13 to panel 12 using wooden dowel (D), and secure them with screw (E).

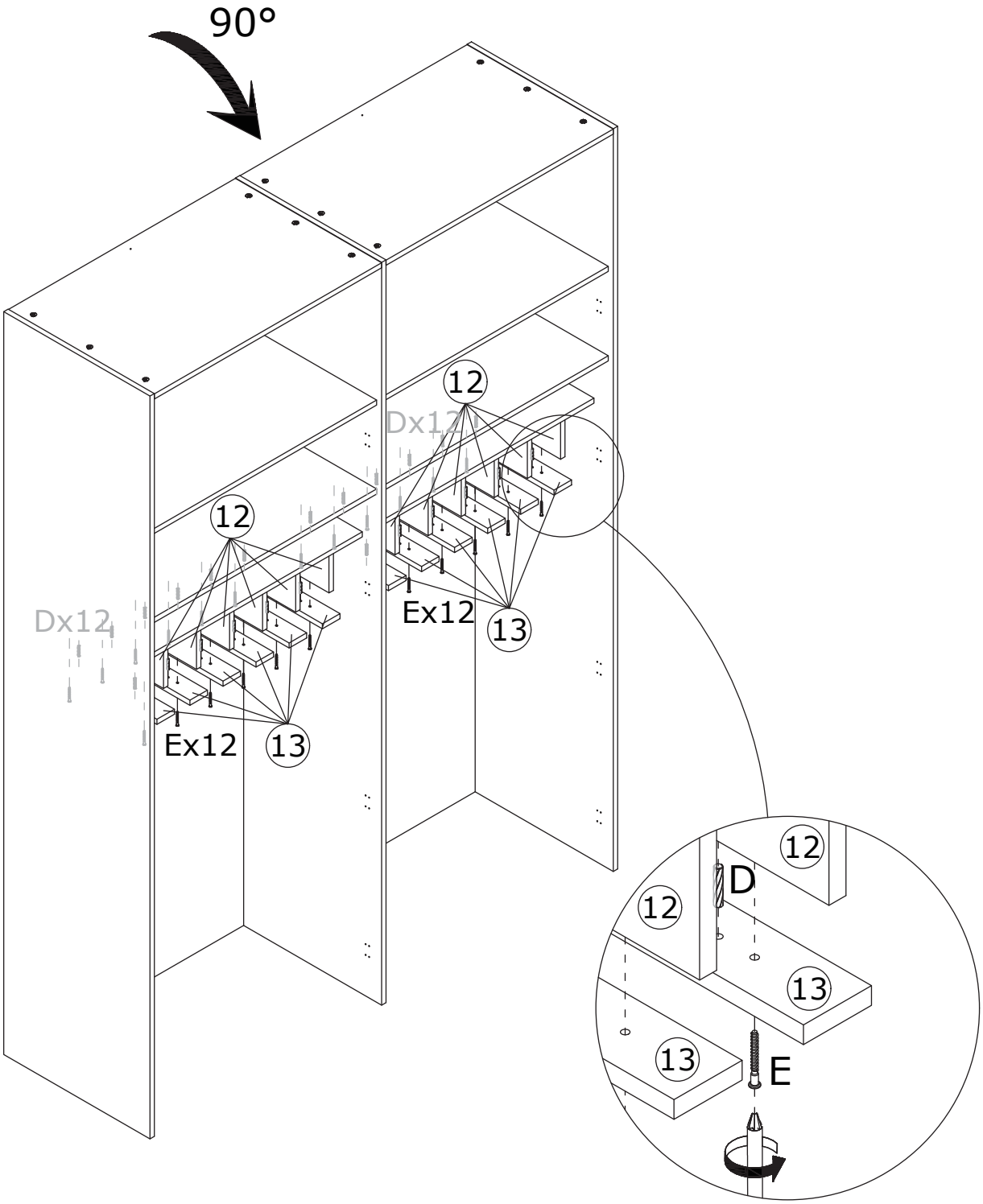

21

E x 12

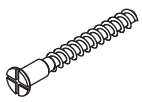

CRC0540A

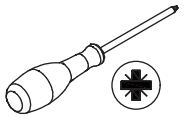

Secure panel 9 and 10 to panel 13 using screw (E).

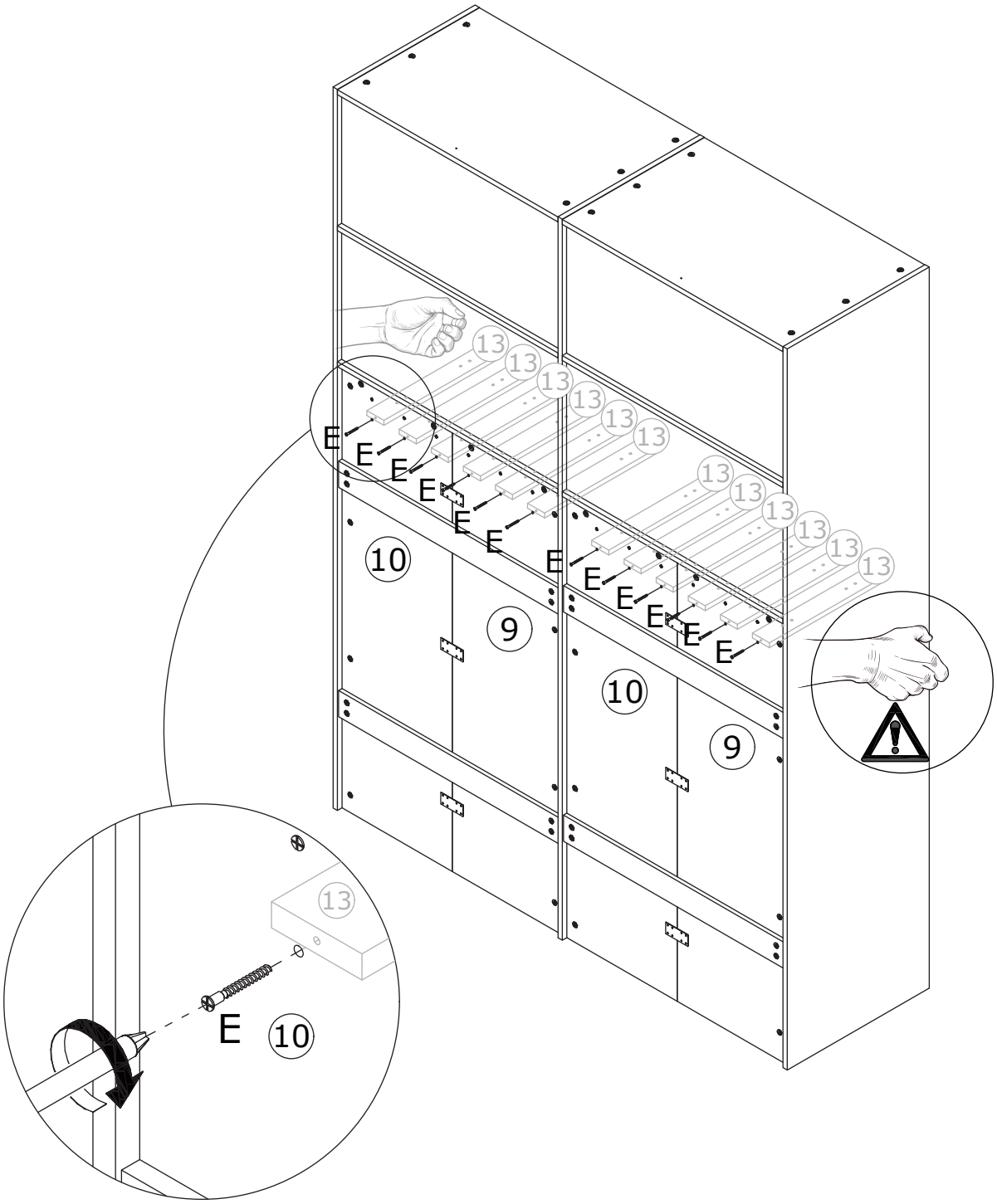

22

| F x 16 | G x 32 | |
|---|---|---|
|  |  | 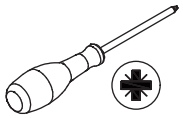 |
| DGA861C | CRD3514A | |

| | G | J | S |
|---|---|---|---|
|  |  |  |  |
| | CRD3514A | CRD3512A | CRD0314A |

Secure hinge (F) to panel 14 using screw (G).

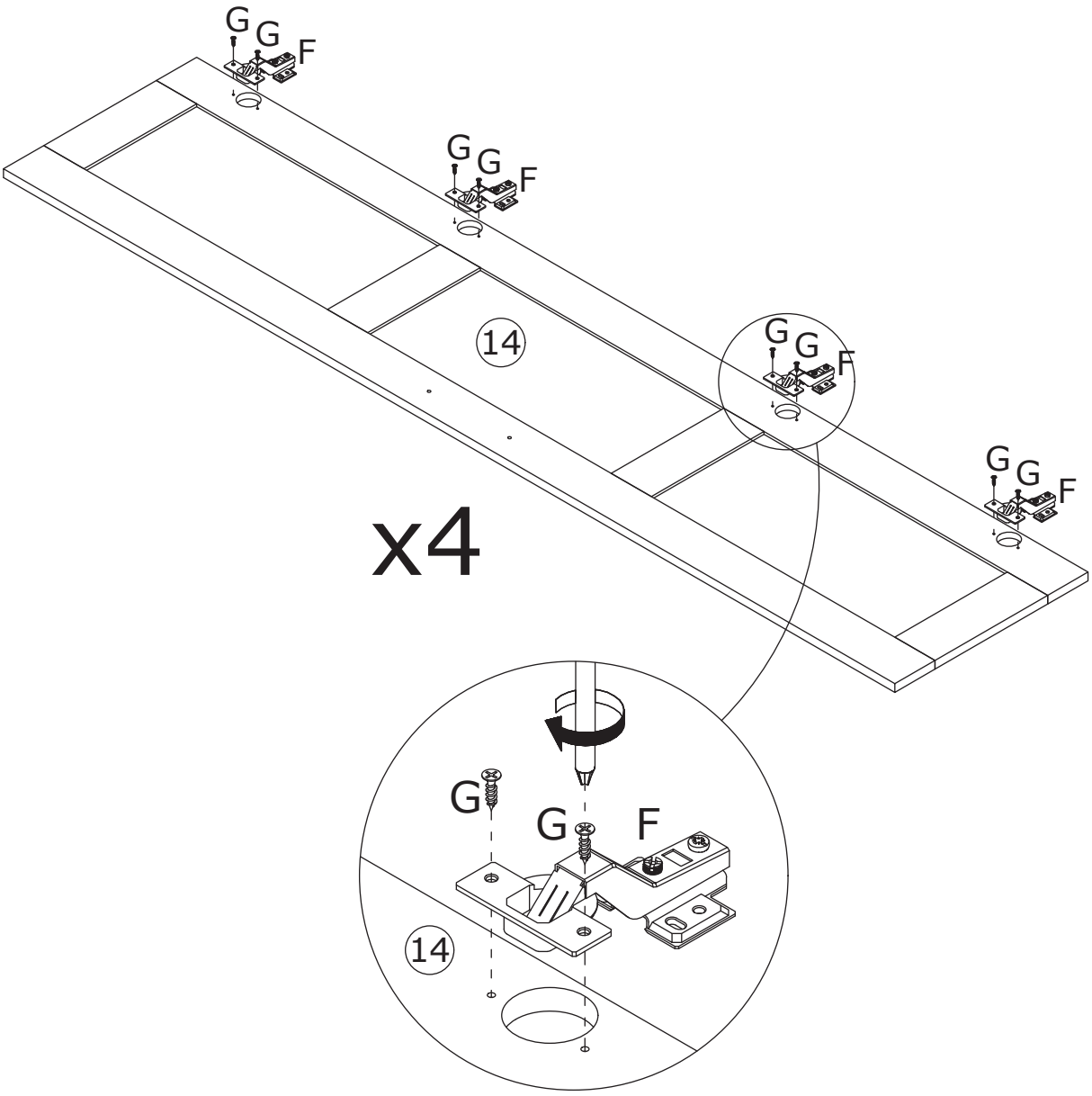

# 23

G x 32



CRD3514A

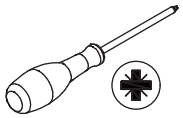

Attach panel 14 to panel 2 and 4 via hinges using screw (G).

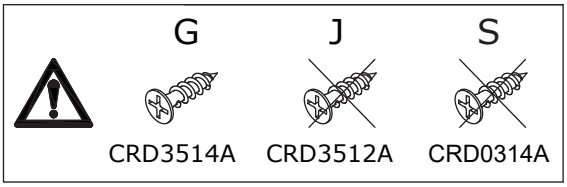


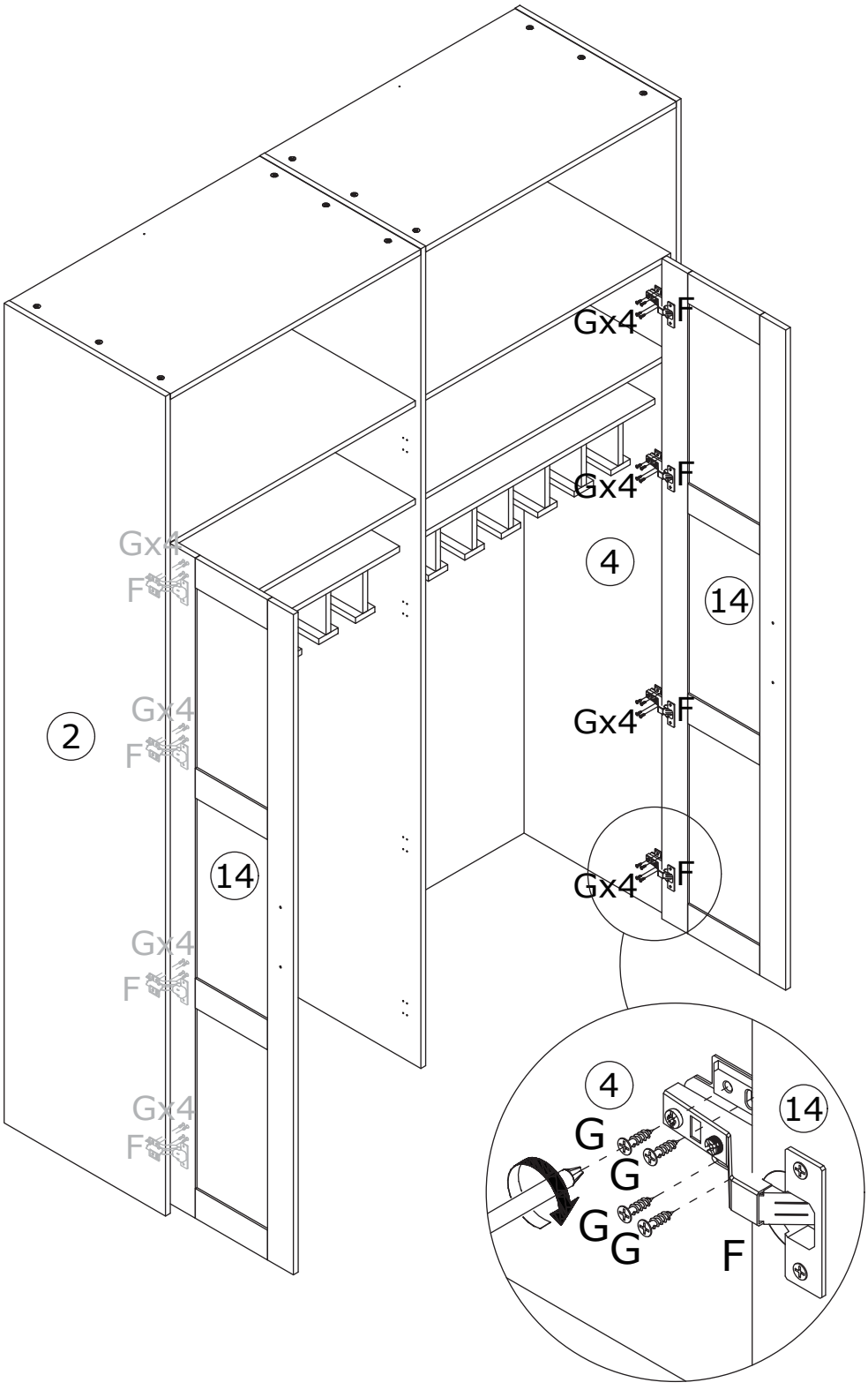

24

| L x 2 | M x 4 | |
|---|---|---|
| 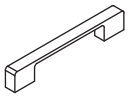 |  CRE0418A | 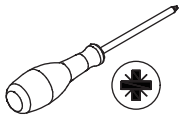 |

Secure handle (L) to panel 14 using screw (M).

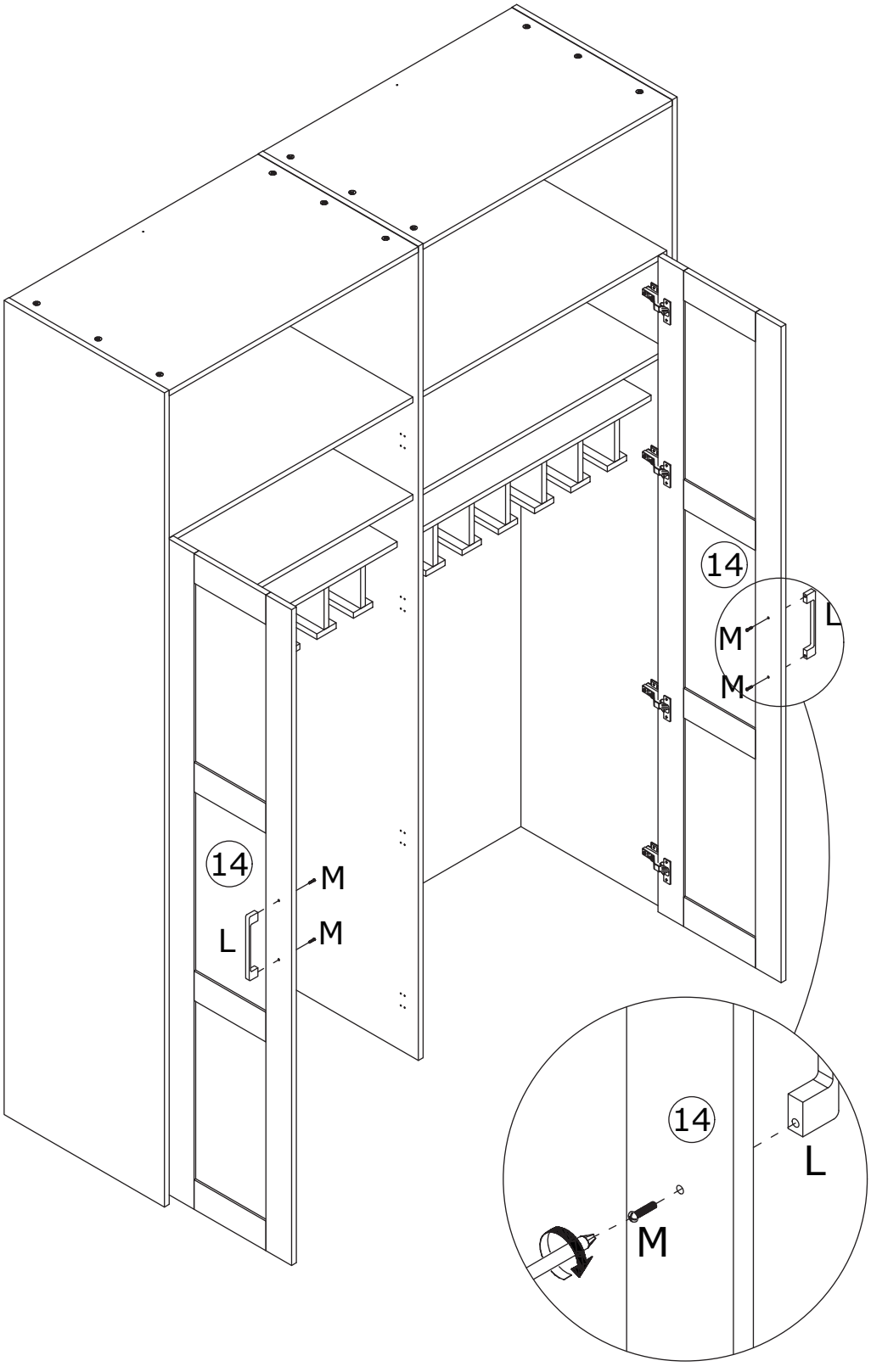

25

G x 16



CRD3514A

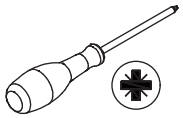



| G | J | S |
|---|---|---|
|  |  |  |
| CRD3514A | CRD3512A | CRD0314A |

Attach panel 14 to panel 3 via hinges using screw (G).

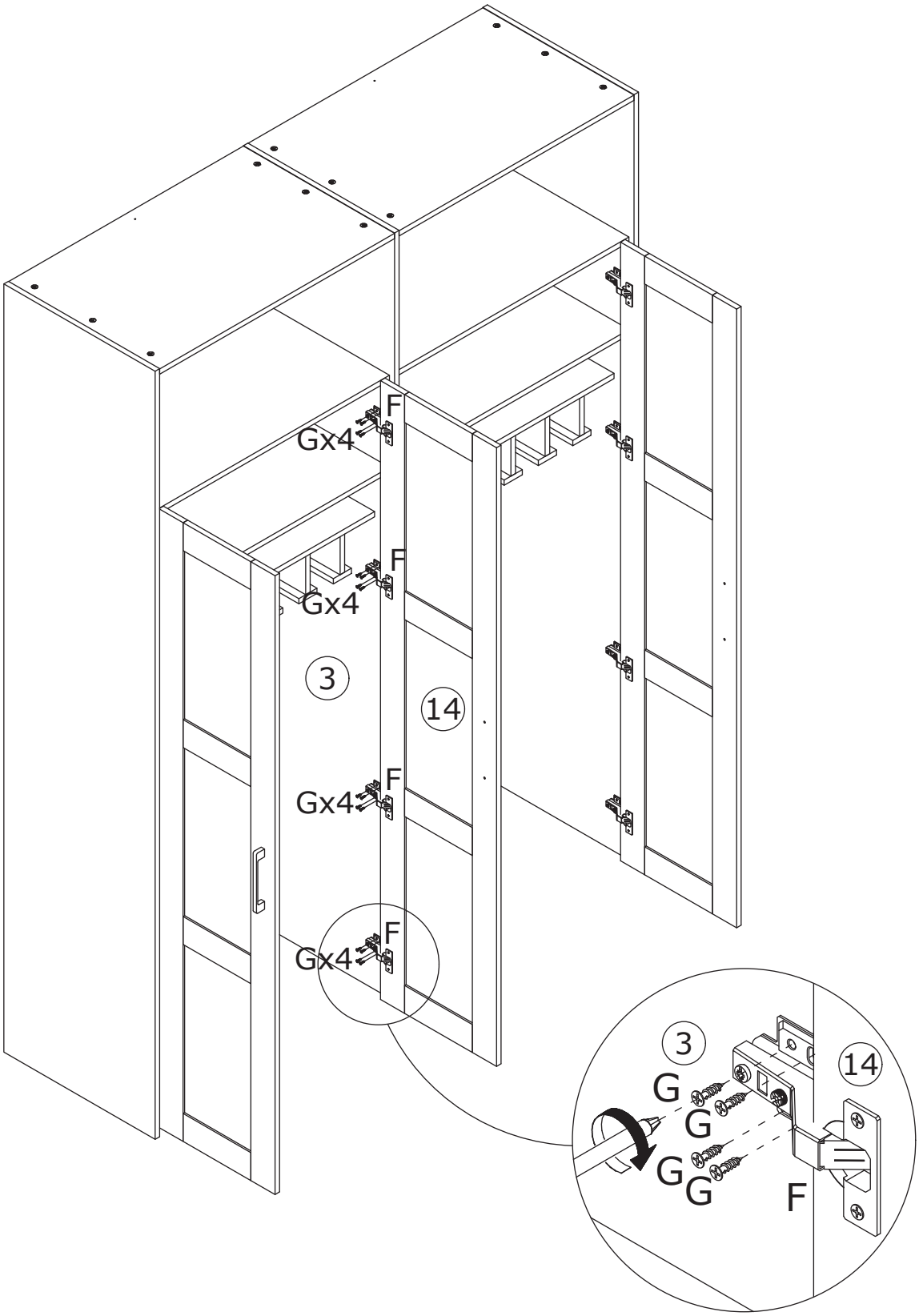

26

| L x 1 | M x 2 | |
|---|---|---|
| 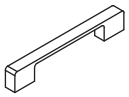 |  CRE0418A | 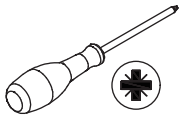 |

Secure handle (L) to panel 14 using screw (M).

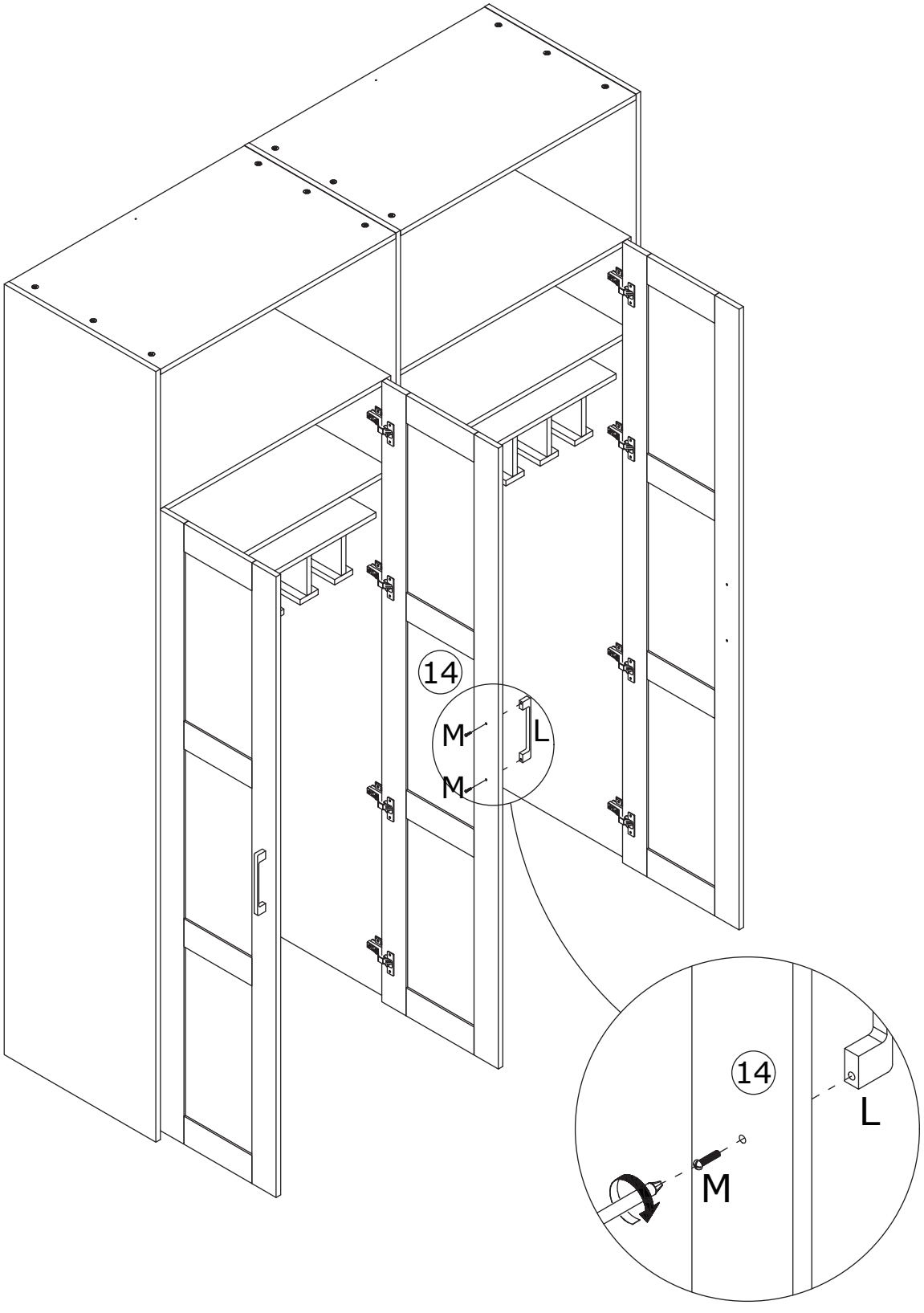

# 27

G x 16



CRD3514A

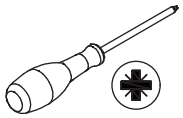

Attach panel 14 to panel 3 via hinges using screw (G).

| | G | J | S |
|---|---|---|---|
| |  |  |  |
| | CRD3514A | CRD3512A | CRD0314A |

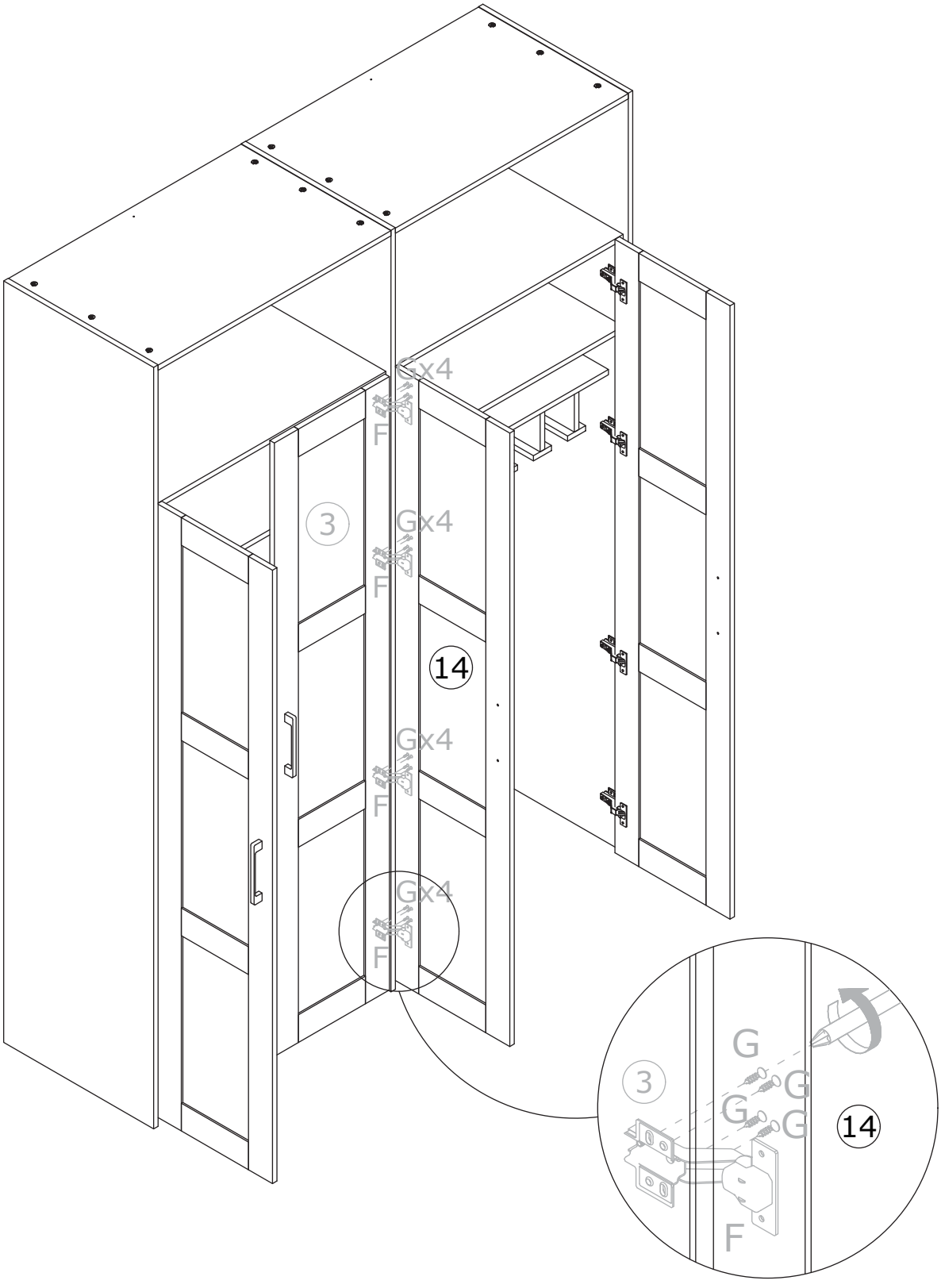

28

| L x 1 | M x 2 | |
|---|---|---|
| 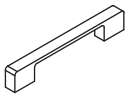 |  CRE0418A | 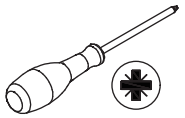 |

Secure handle (L) to panel 14 using screw (M).

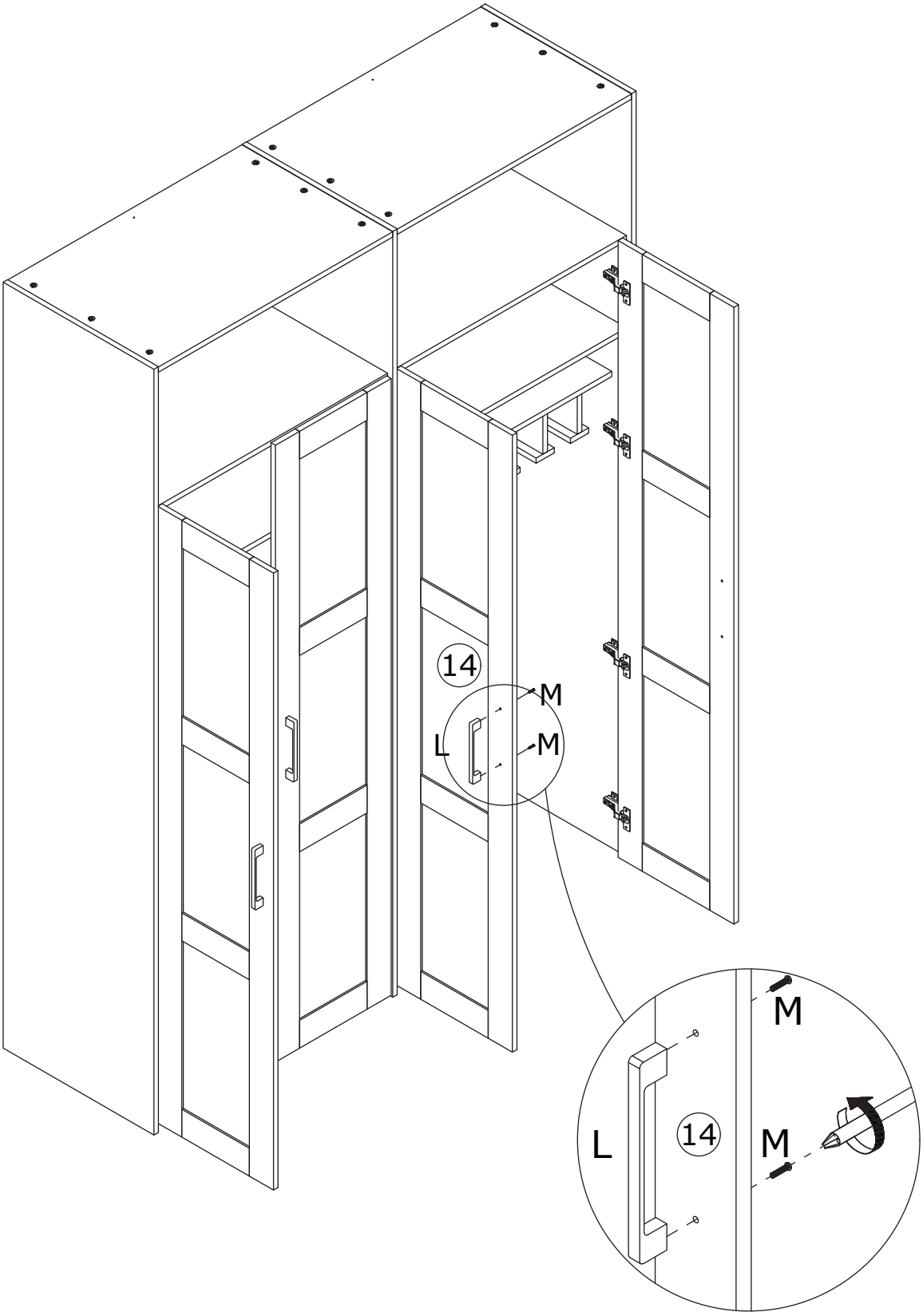

29

| R x 24 | S x 24 | |
|---|---|---|
|  |  CRD0314A | 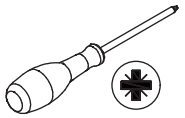 |



| G | J | S |
|---|---|---|
|  CRD3514A |  CRD3512A |  CRD0314A |

First, insert clip (R) into the available slots, then secure them with screw (S).

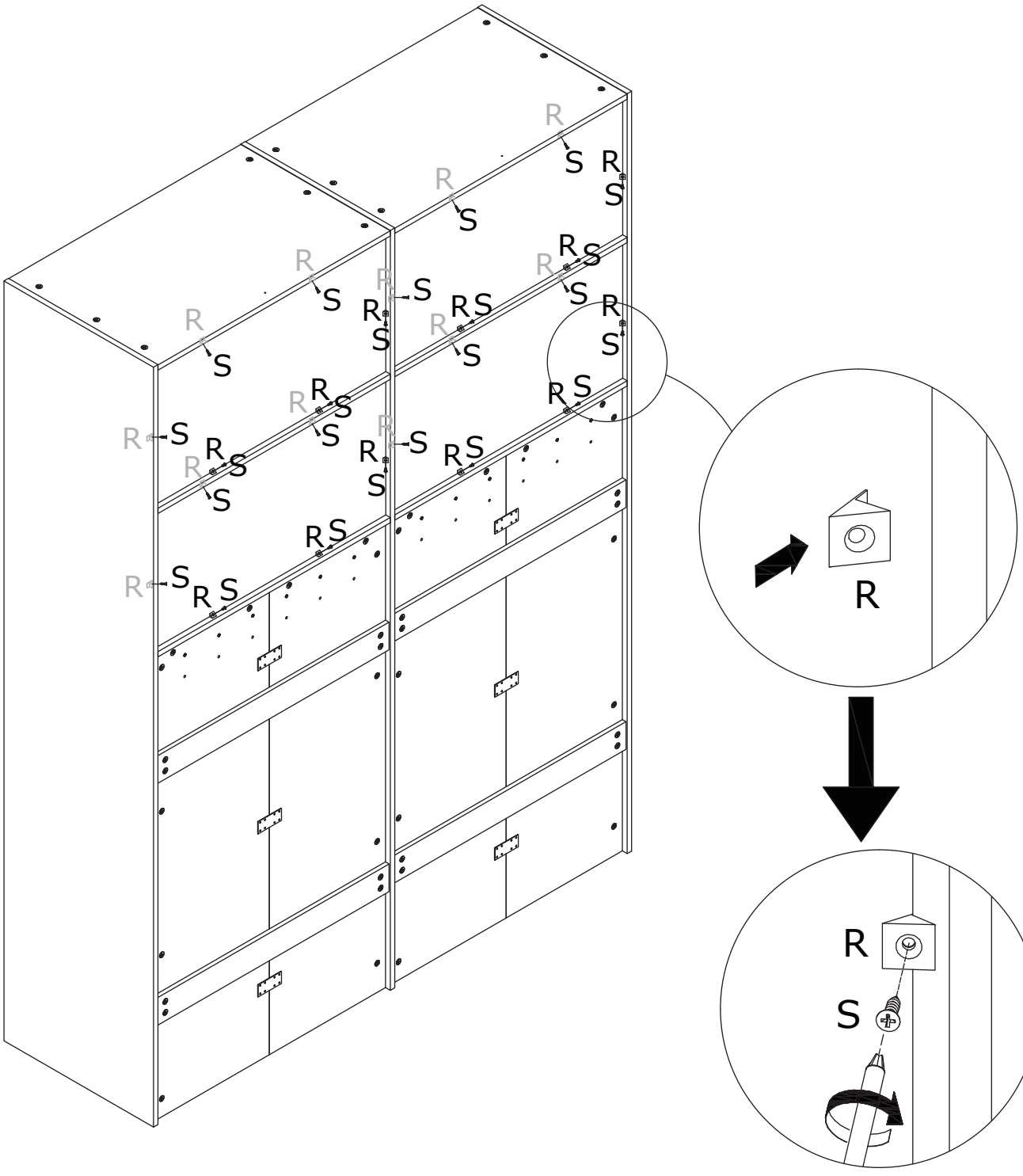

30

| G x 2 | N x 2 | |
|---|---|---|
| CRD3514A | | |

| | G | J | S |
|---|---|---|---|
| | CRD3514A | CRD3512A | CRD0314A |

Secure bracket (N) to panel 1 using screw (G).

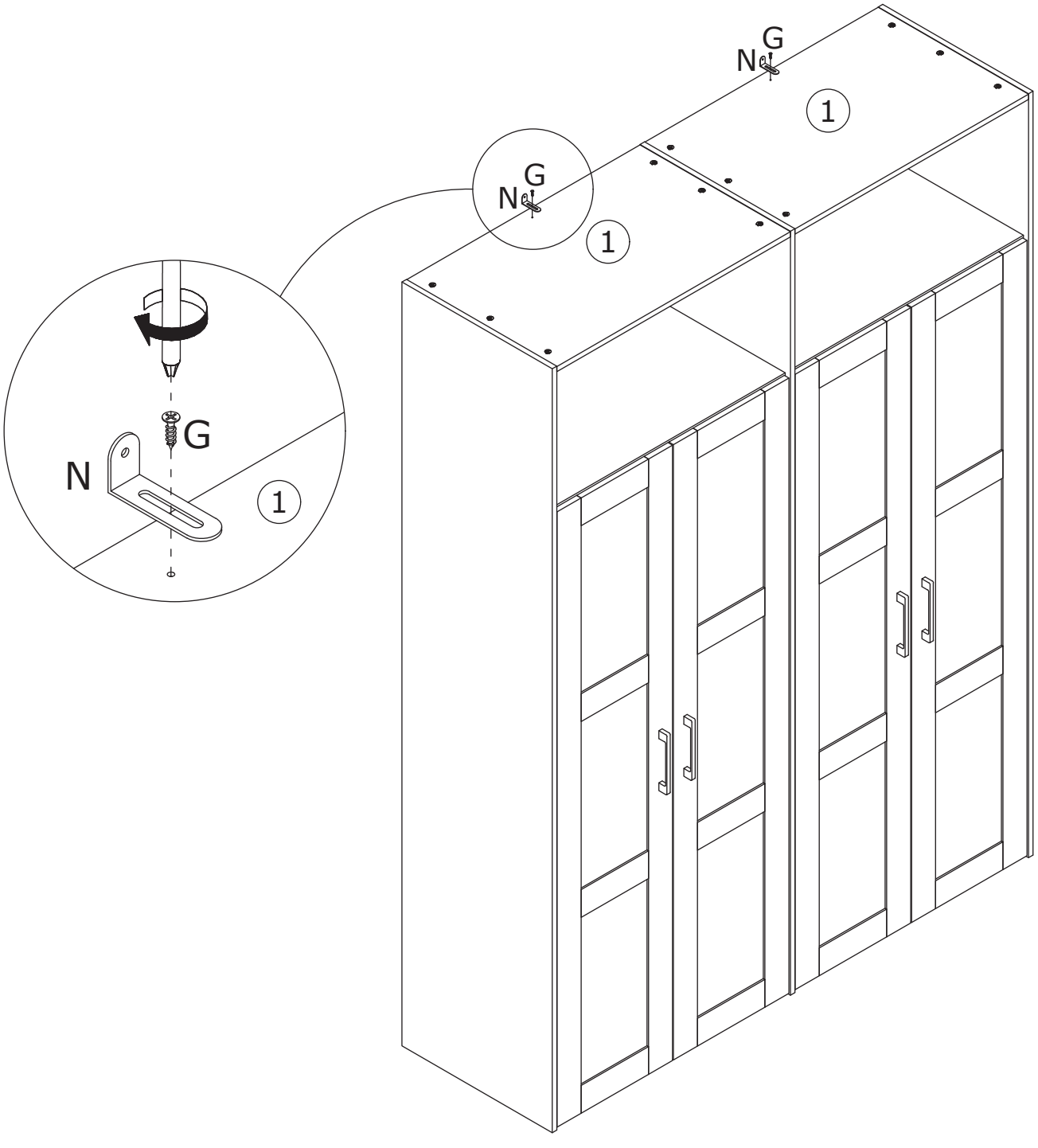

# 31

| P x 2 | Q x 2 | |
|---|---|---|
| 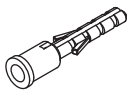 | 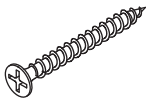 CRD3535A | 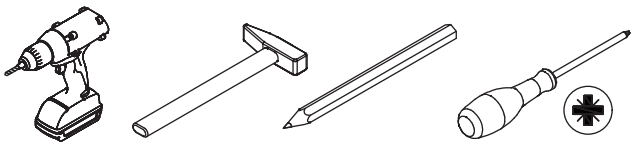 |



Q 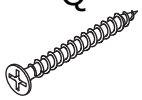 CRD3535A

T 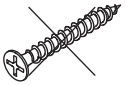 CRD3530A

U 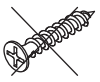 CRD3520A

Install an anti-tip device.

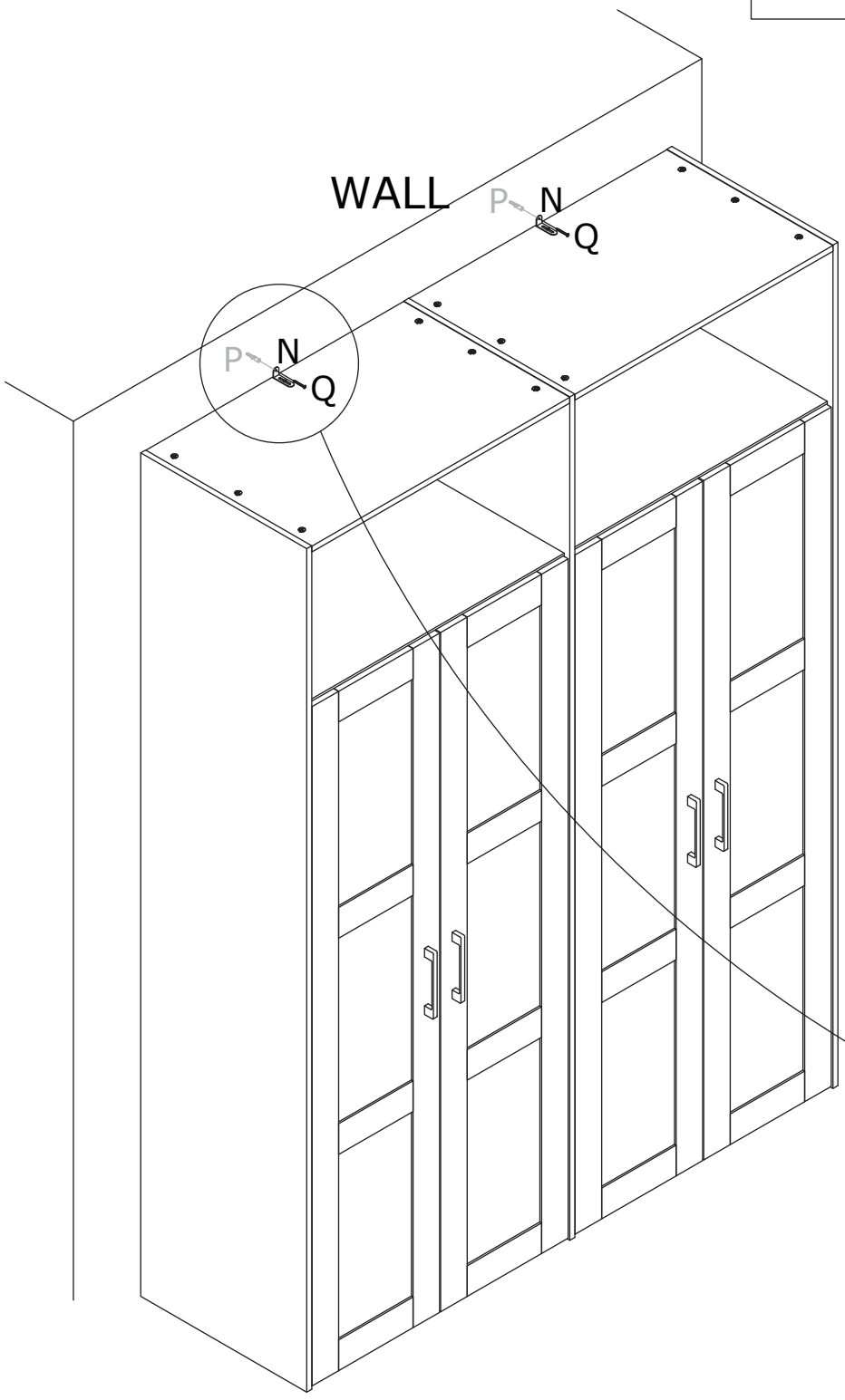


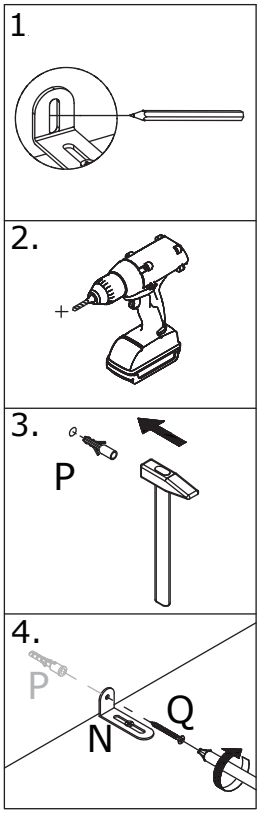


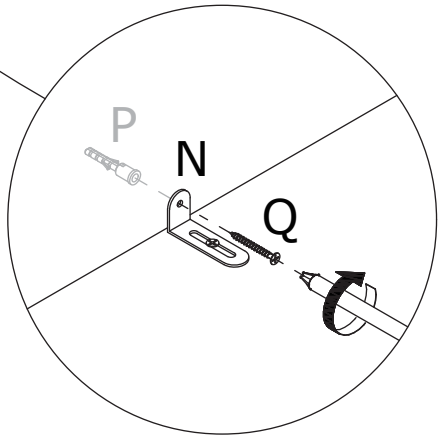

32

| V x 8 | Y x 1 | |
|---|---|---|
| 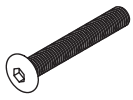 CRG0865A |  | |

Connect part 26 and 27 to part 28, 29, 30, and 31 using screw (V).

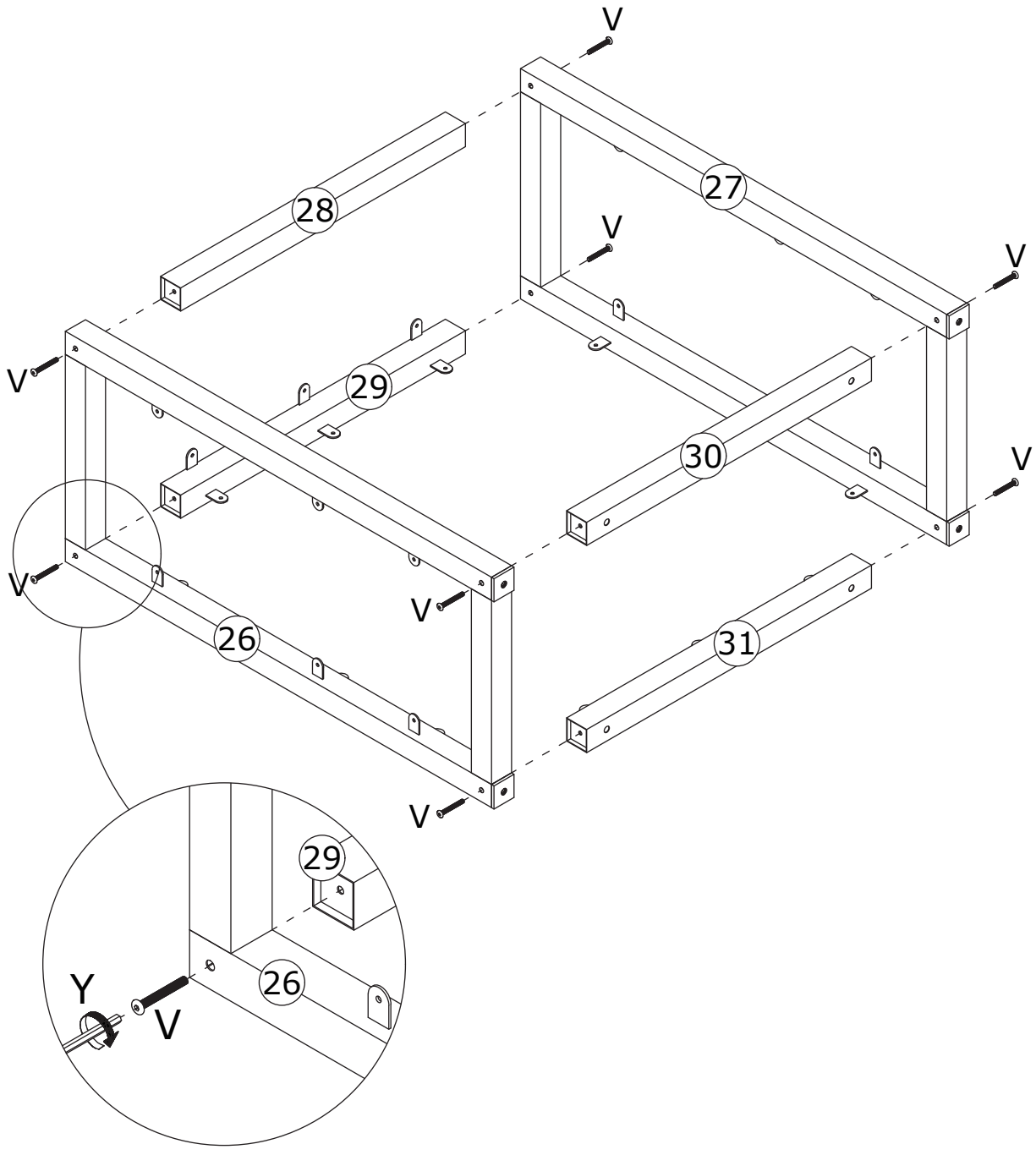

33

| D x 20 | T x 30 | |
|---|---|---|
| 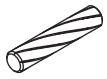 | 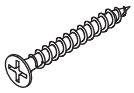 | 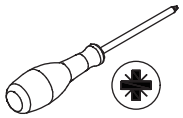 |
| CRF0630A | CRD3530A | |

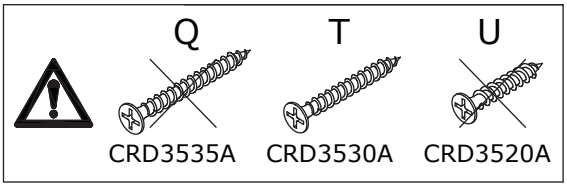


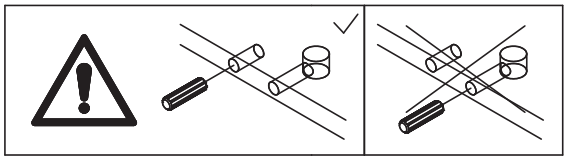

Connect panel 25 to panel 22 and 23 using wooden dowel (D), and secure them with screw (T).

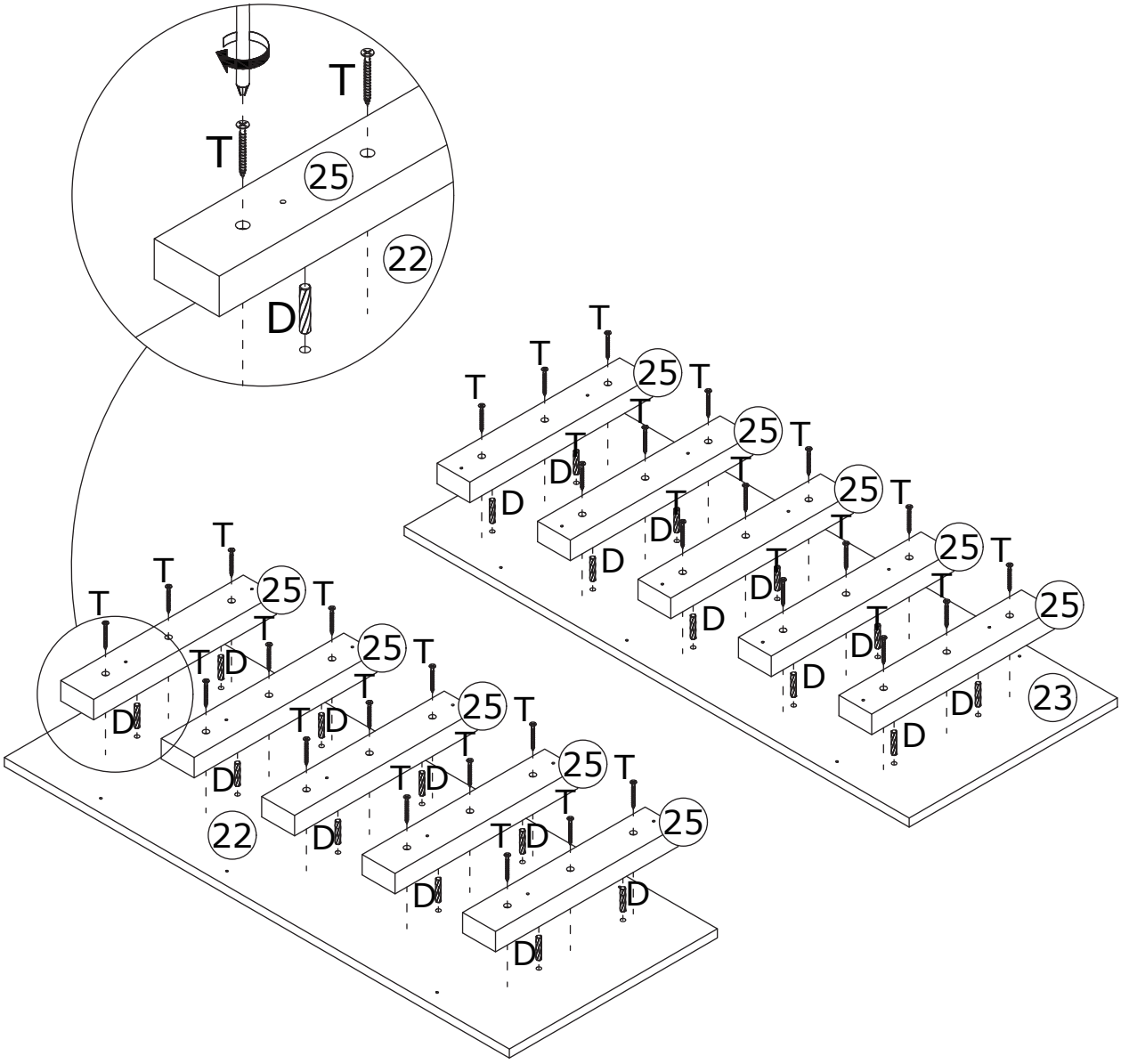

# 34

| H x 5 | U x 20 | |
|---|---|---|
| 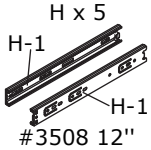  #3508 12'' | 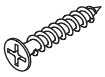 CRD3520A | 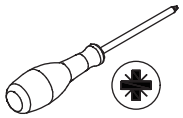 |



Q 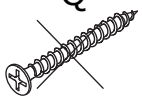 CRD3535A

T 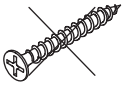 CRD3530A

U  CRD3520A

Secure slide rail (H-1) to panel 25 using screw (U).

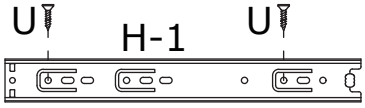


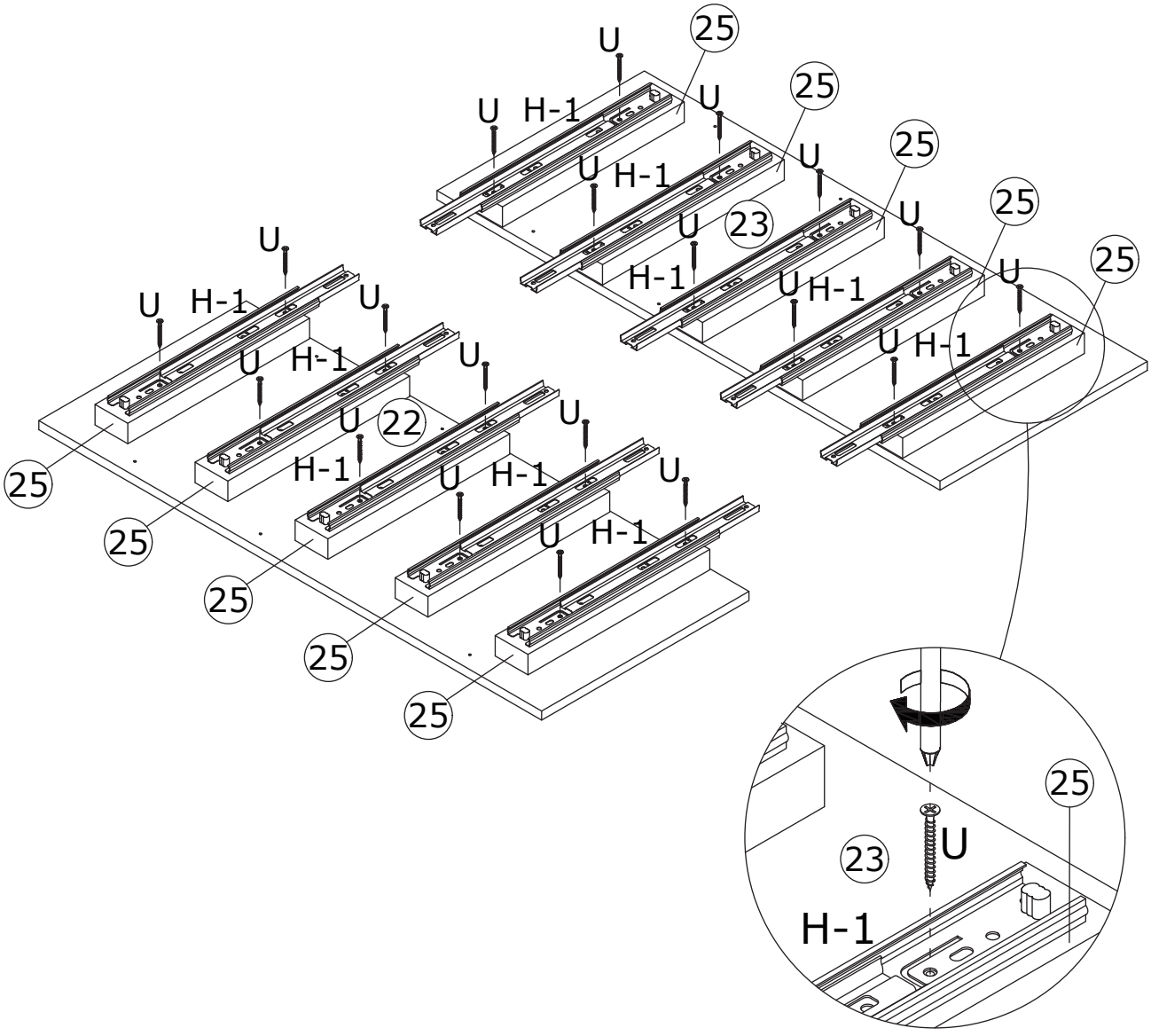

35

J x 12



CRD3512A

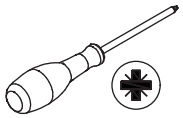



G



CRD3514A

J



CRD3512A

S



CRD0314A

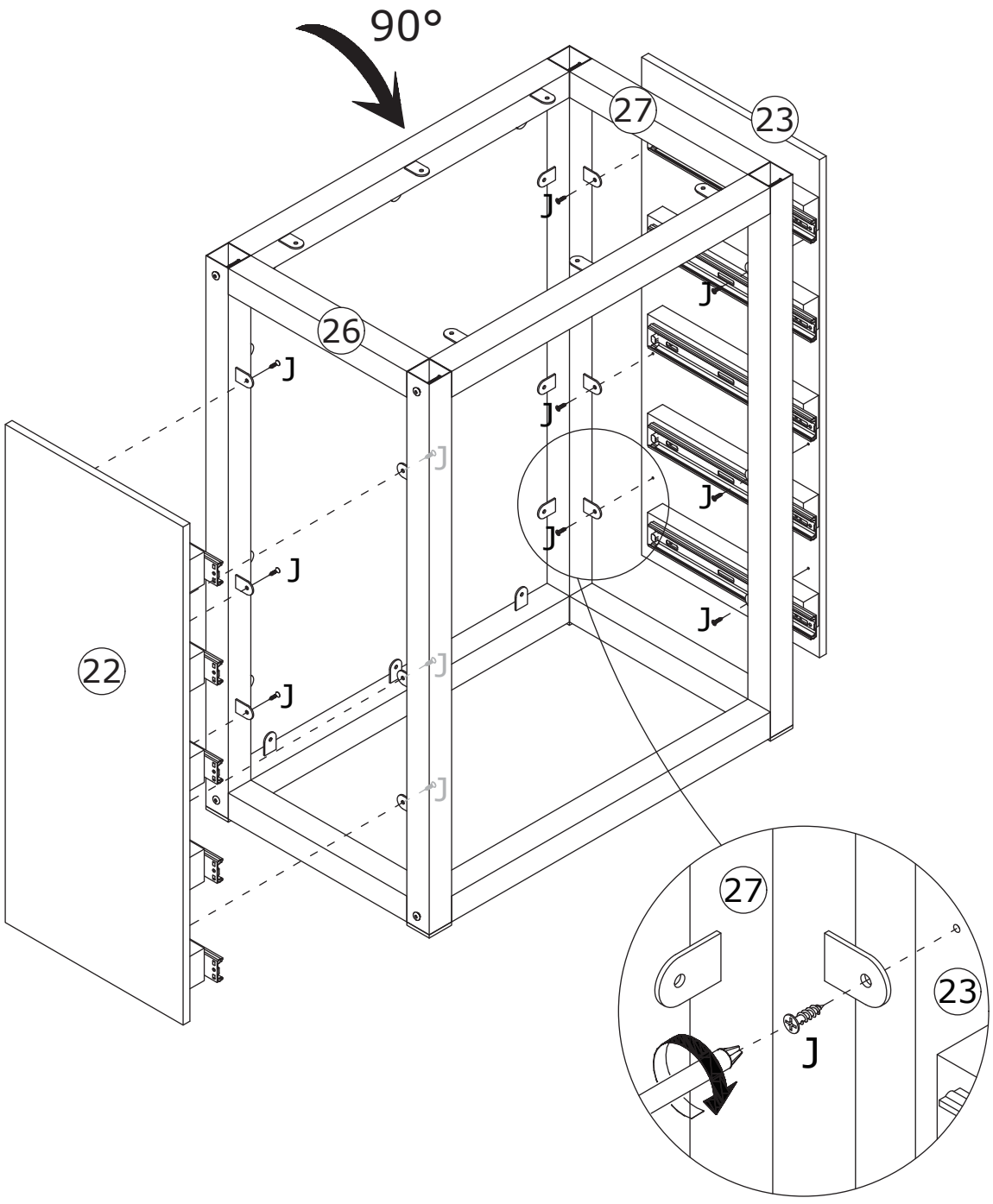


Turn the cabinet upside down and attach panel 22 and 23 to part 26 and 27 respectively using screw (J).

# 36

J x 12



CRD3512A

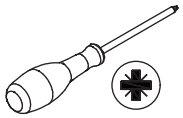



G



CRD3514A

J



CRD3512A

S



CRD0314A

Attach panel 24 to part 29 and 31 using screw (J).

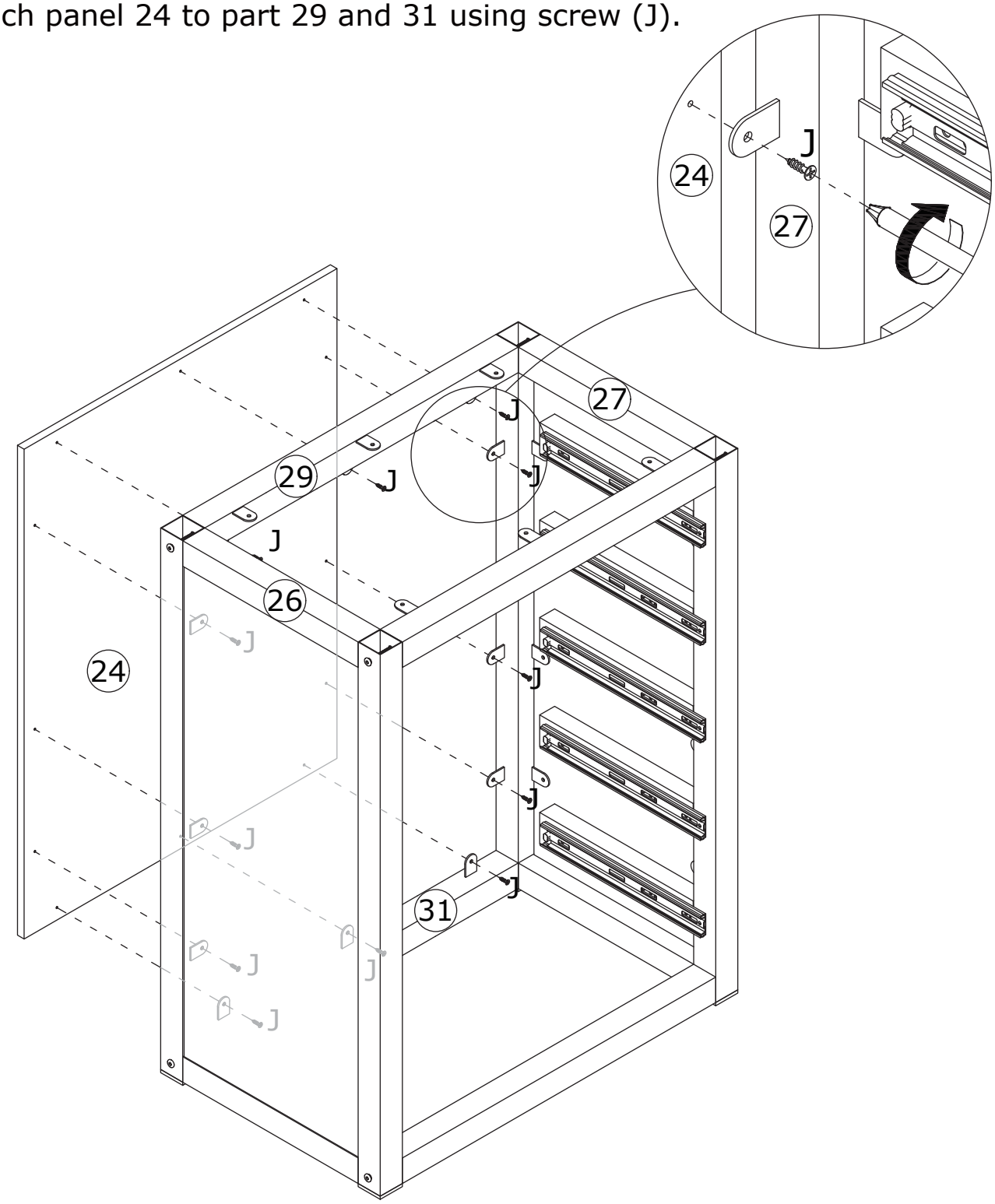

37

J x 6



CRD3512A

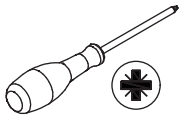



G



CRD3514A

J



CRD3512A

S



CRD0314A

Attach panel 21 to part 29 and 28 using screw (J).

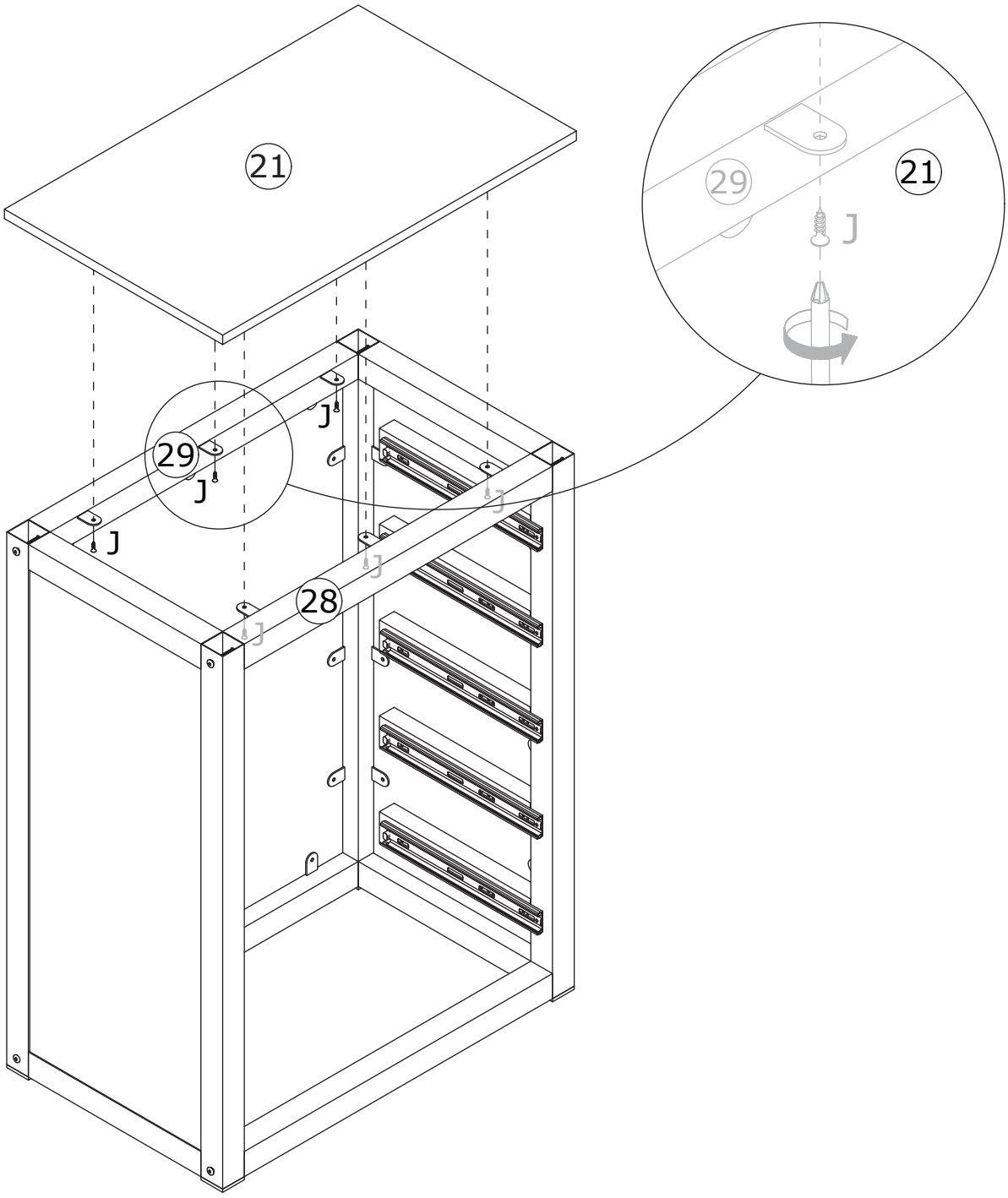

# 38

| W x 4 | X x 1 | |
|---|---|---|
|  |  | |

Turn the cabinet upside down and install wheel (W) to part 26 and 27.

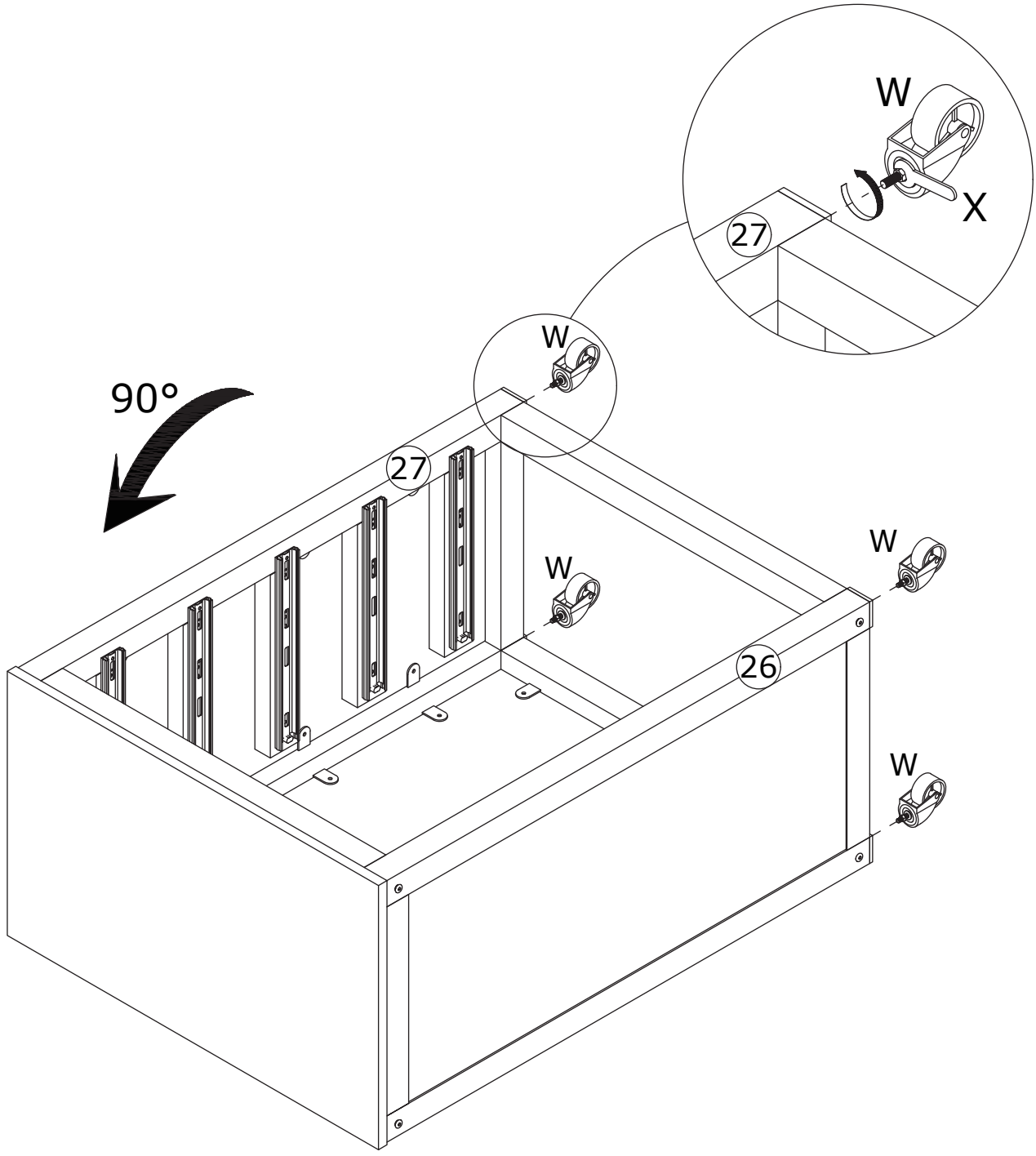

# 39

| B x 25 | C x 25 | |
|---|---|---|
| 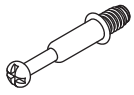 CRA0635B |  | 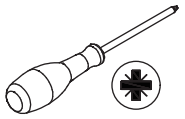 |

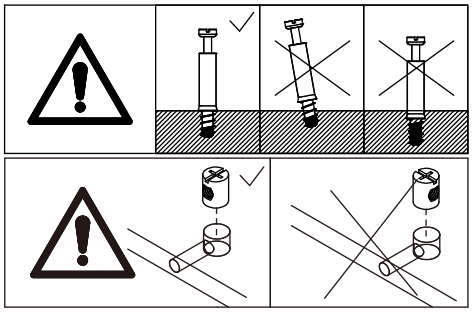

First, install plug (B) onto panel 32, then screw self-tapping rod (C) into panel 32.

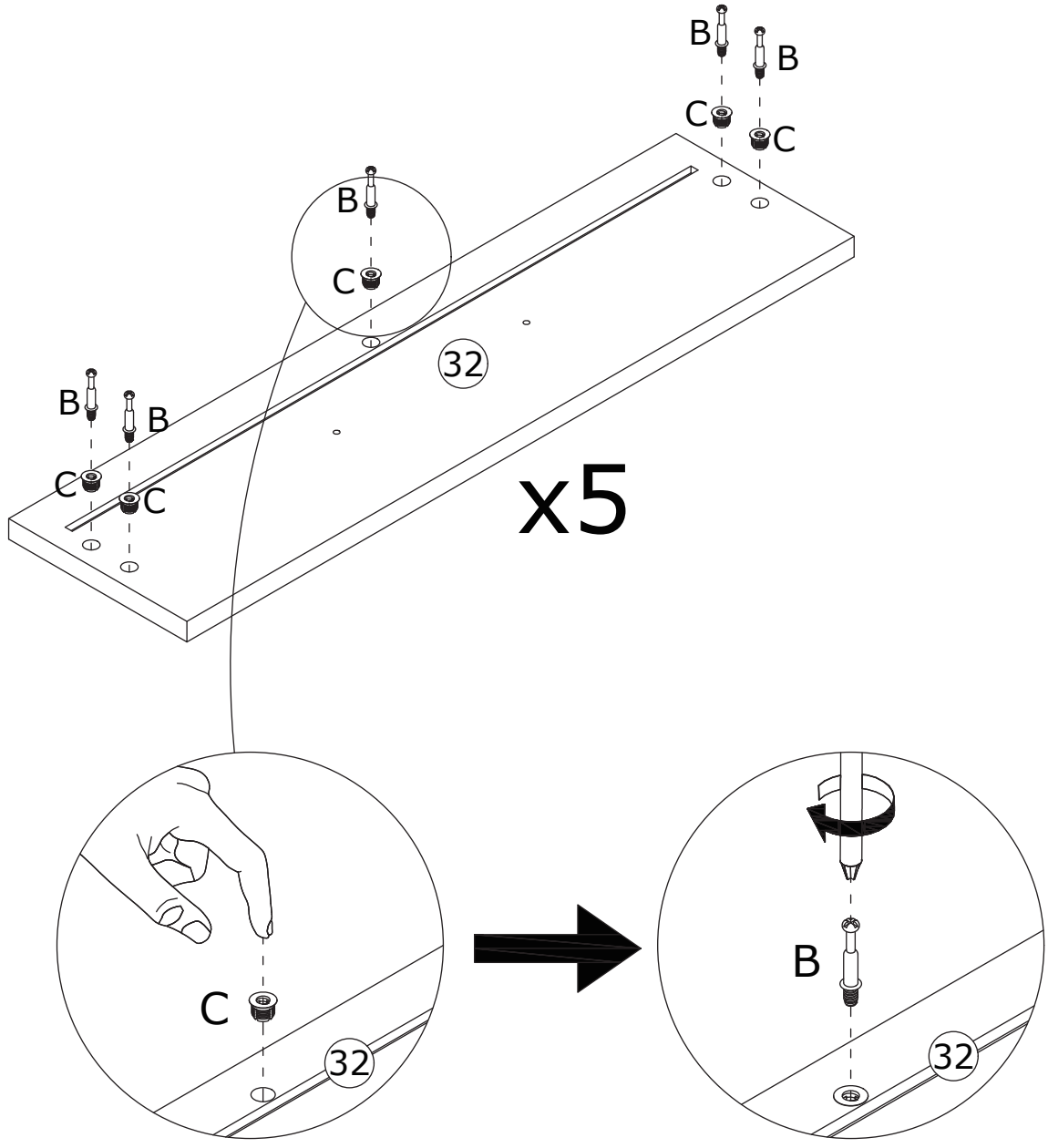

40

A x 25



CRB1595A

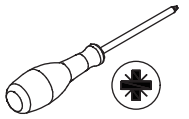

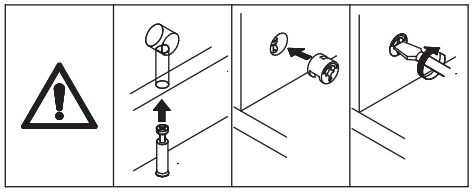

Connect panel 33, 34, and 36 to panel 32, then tighten by turning cam lock (A) clockwise.

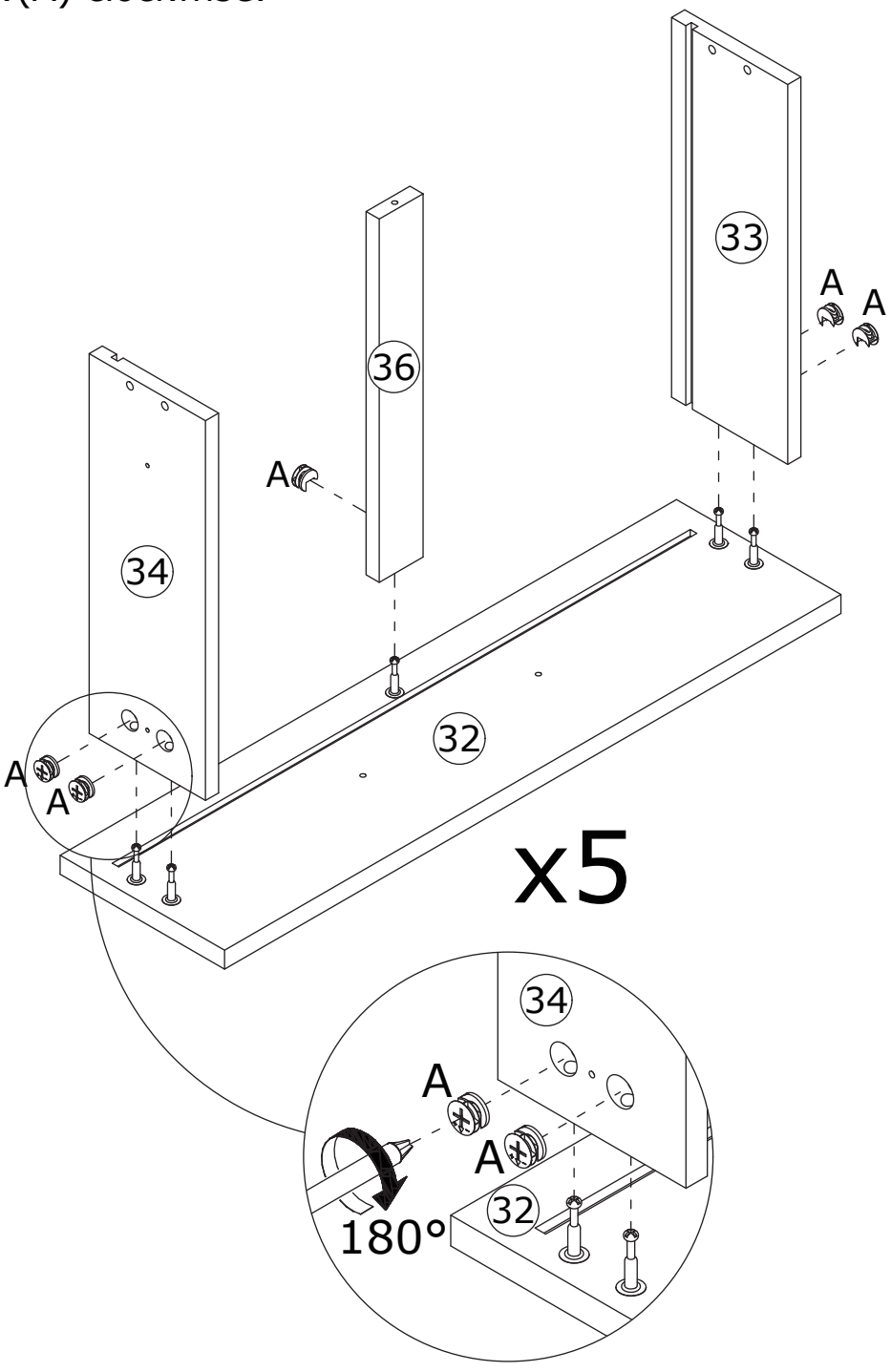

41

Insert panel 37 into the available slots.

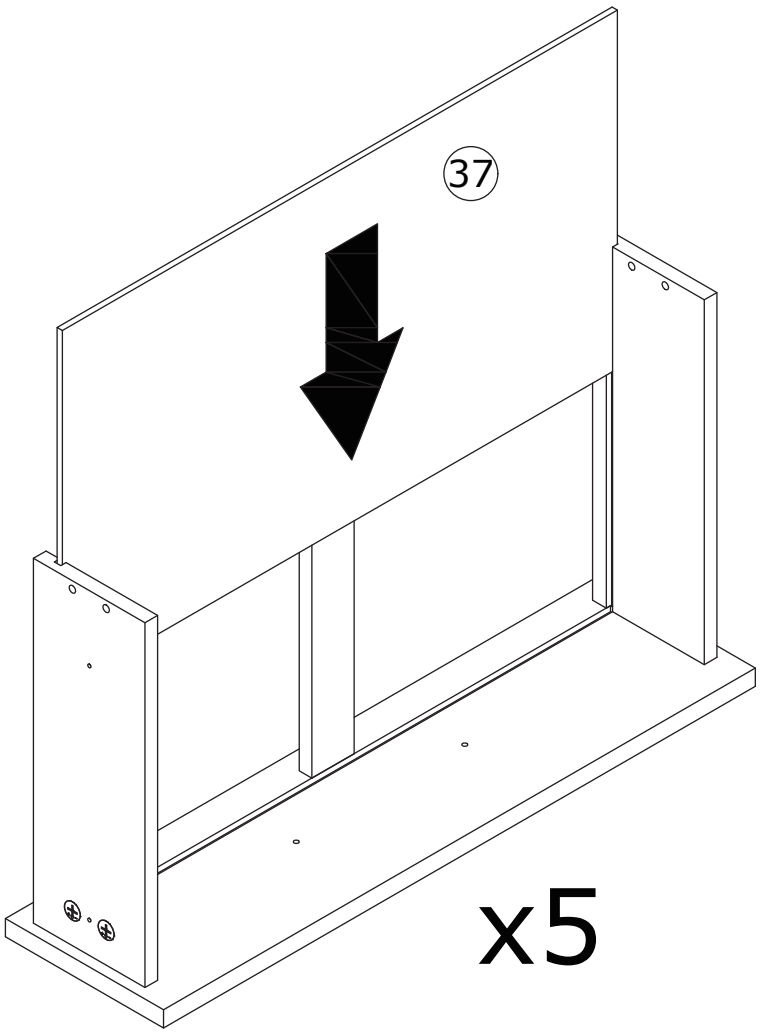

42

E x 25

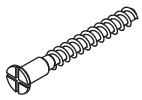

CRC0540A

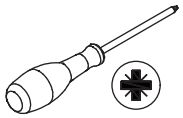

Secure panel 33, 34, and 36 to panel 35 using screw (E).

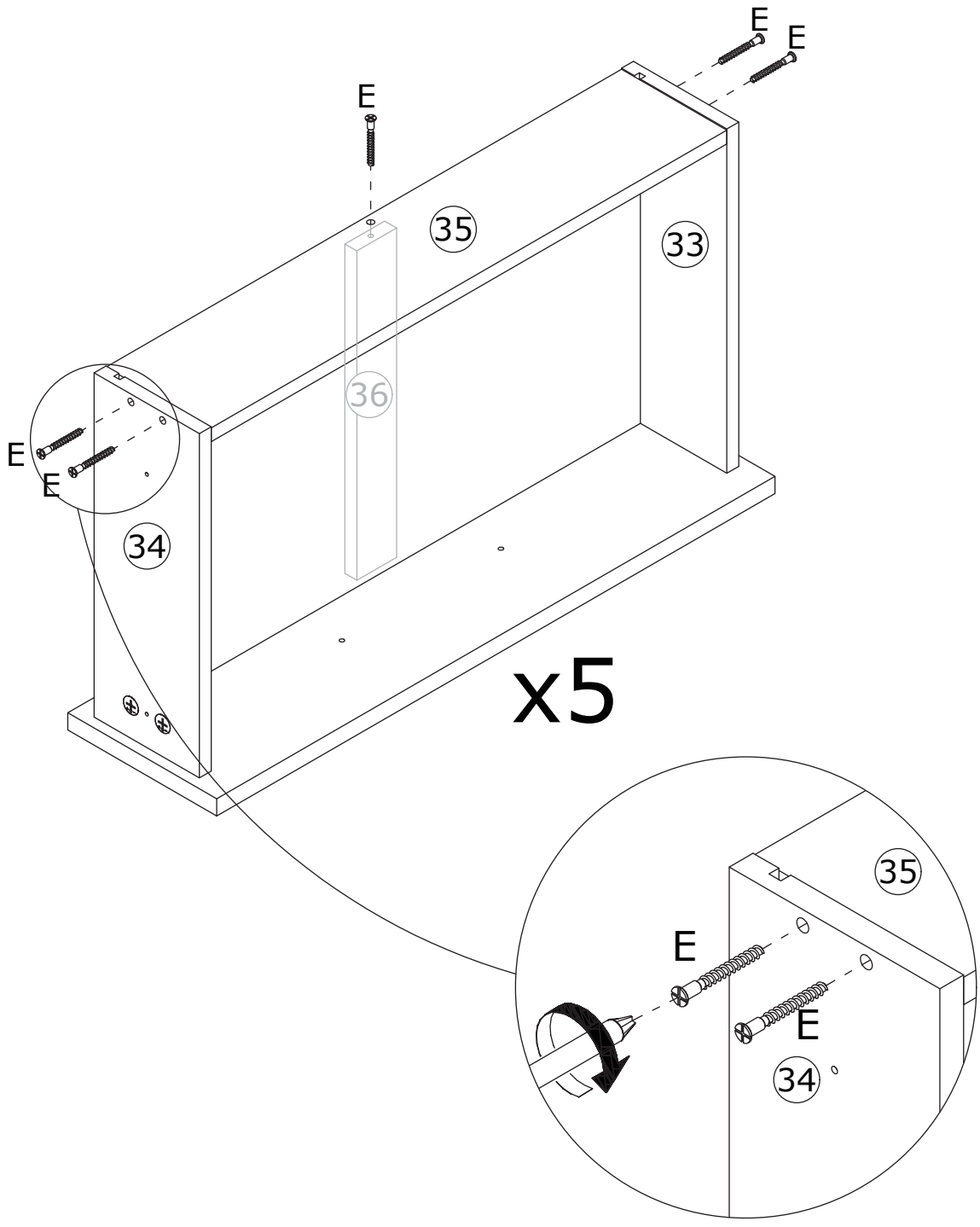

# 43

| H x 5 | J x 20 | |
|---|---|---|
| 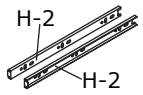  #3508 12'' |  CRD3512A | 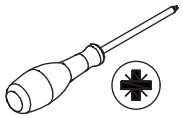 |



| G | J | S |
|---|---|---|
|  CRD3514A |  CRD3512A |  CRD0314A |

Secure slide rail (H-2) to panel 33 and 34 using screw (J).

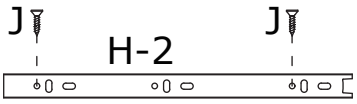


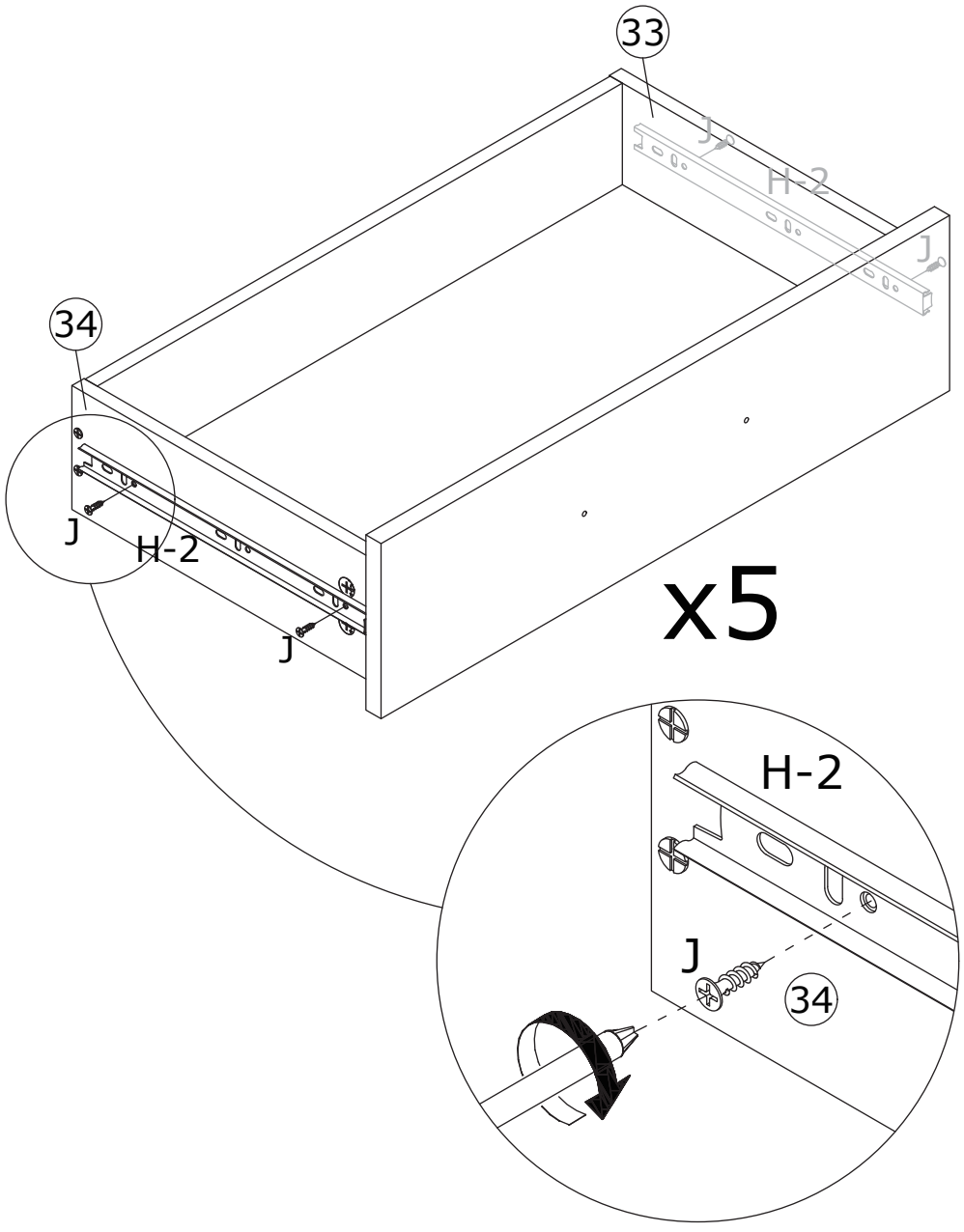

44

| L x 5 | M x 10 | |
|---|---|---|
| 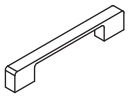 | 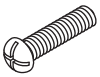 CRE0418A | 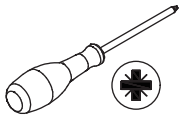 |

Secure handle (L) to panel 32 using screw (M).

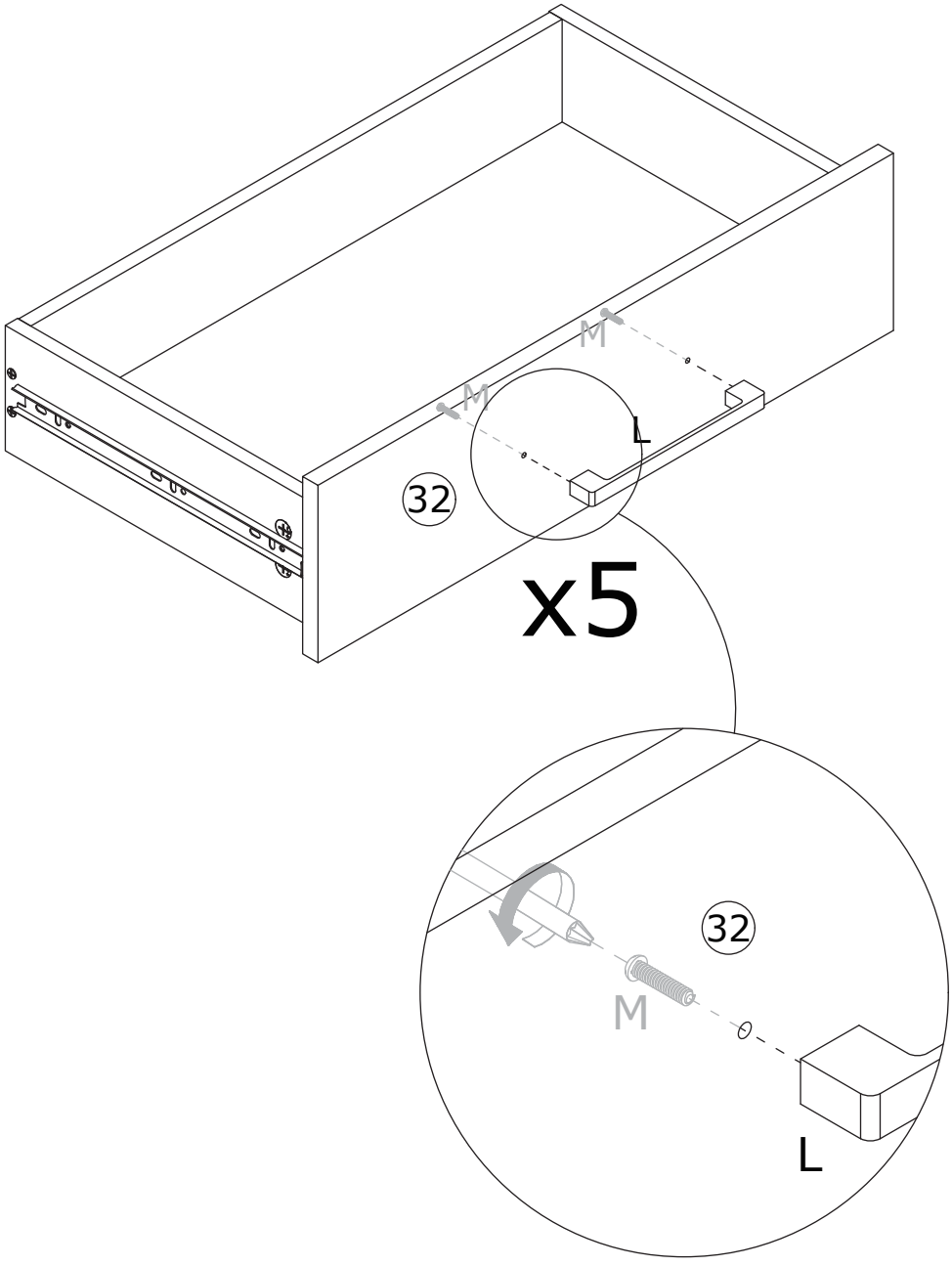

45

Insert the drawers to the main body.

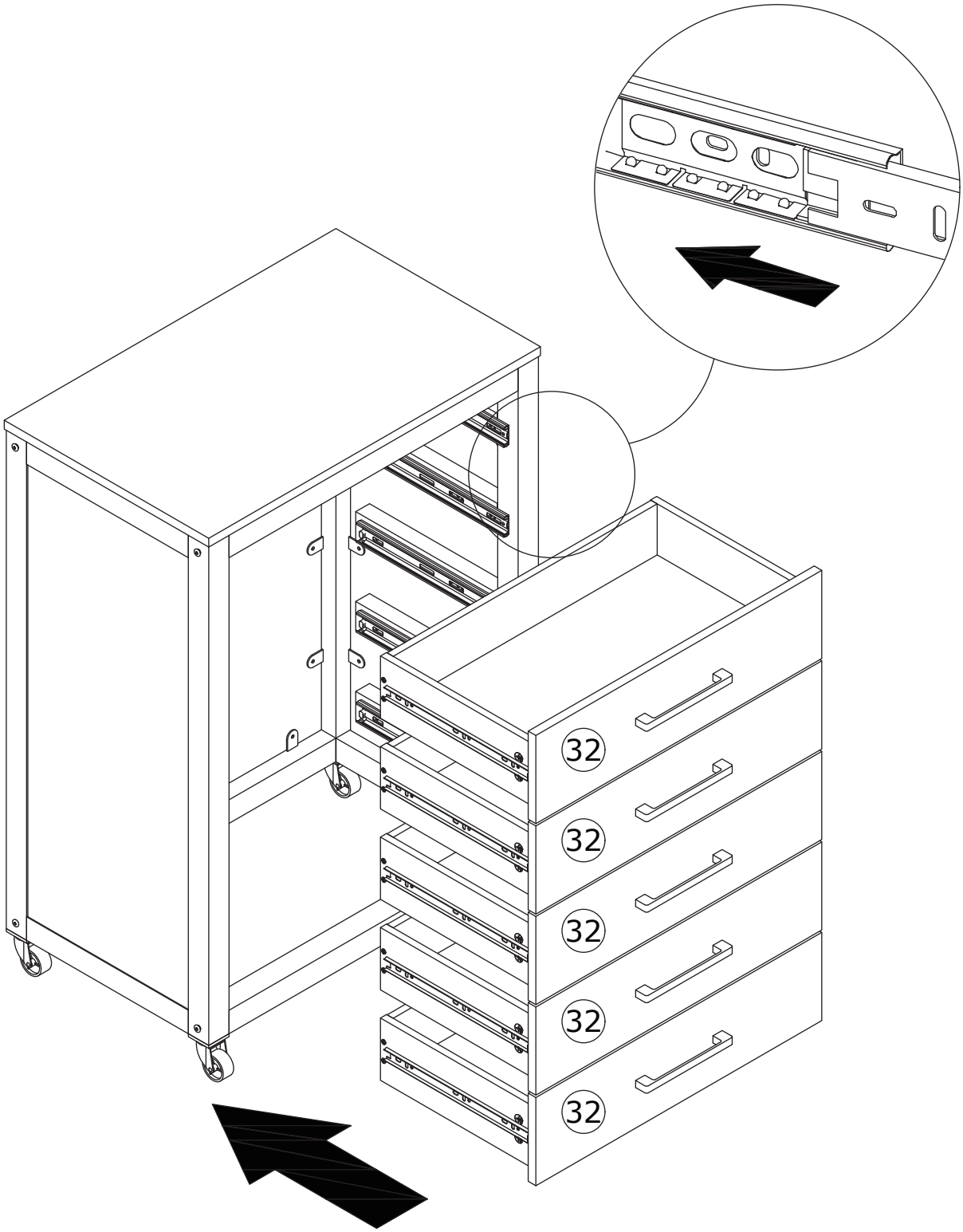

46

| V x 12 | Y x 1 | |
|---|---|---|
| 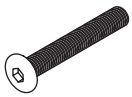 CRG0865A |  | |

Attach part 17 to part 18, 19, and 20 using screw (V).

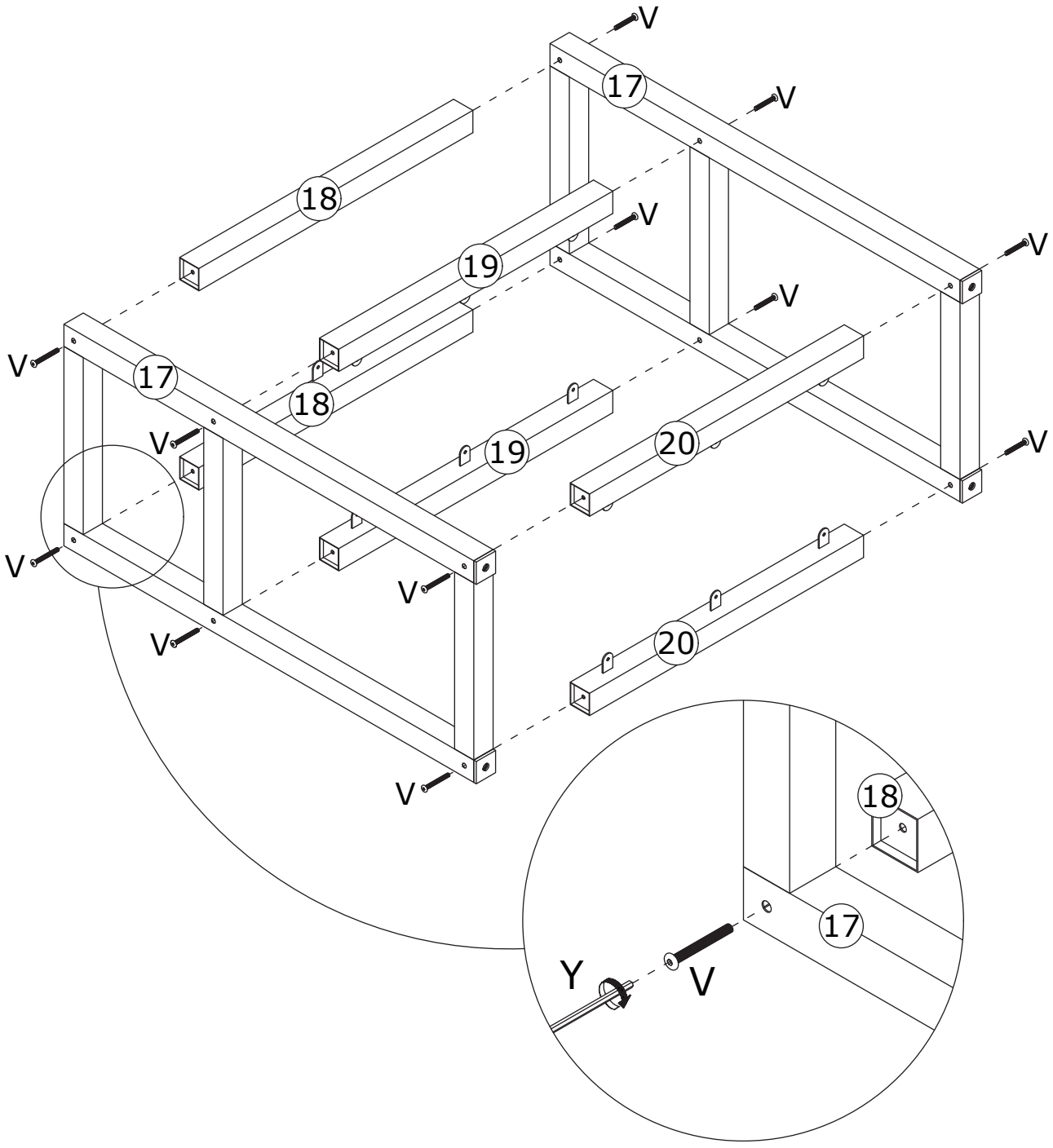

47

J x 18



CRD3512A

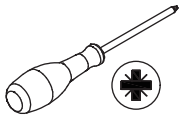



G



CRD3514A

J



CRD3512A

S



CRD0314A

Attach panel 15 and 16 to part 18, 19, and 20 using screw (J).

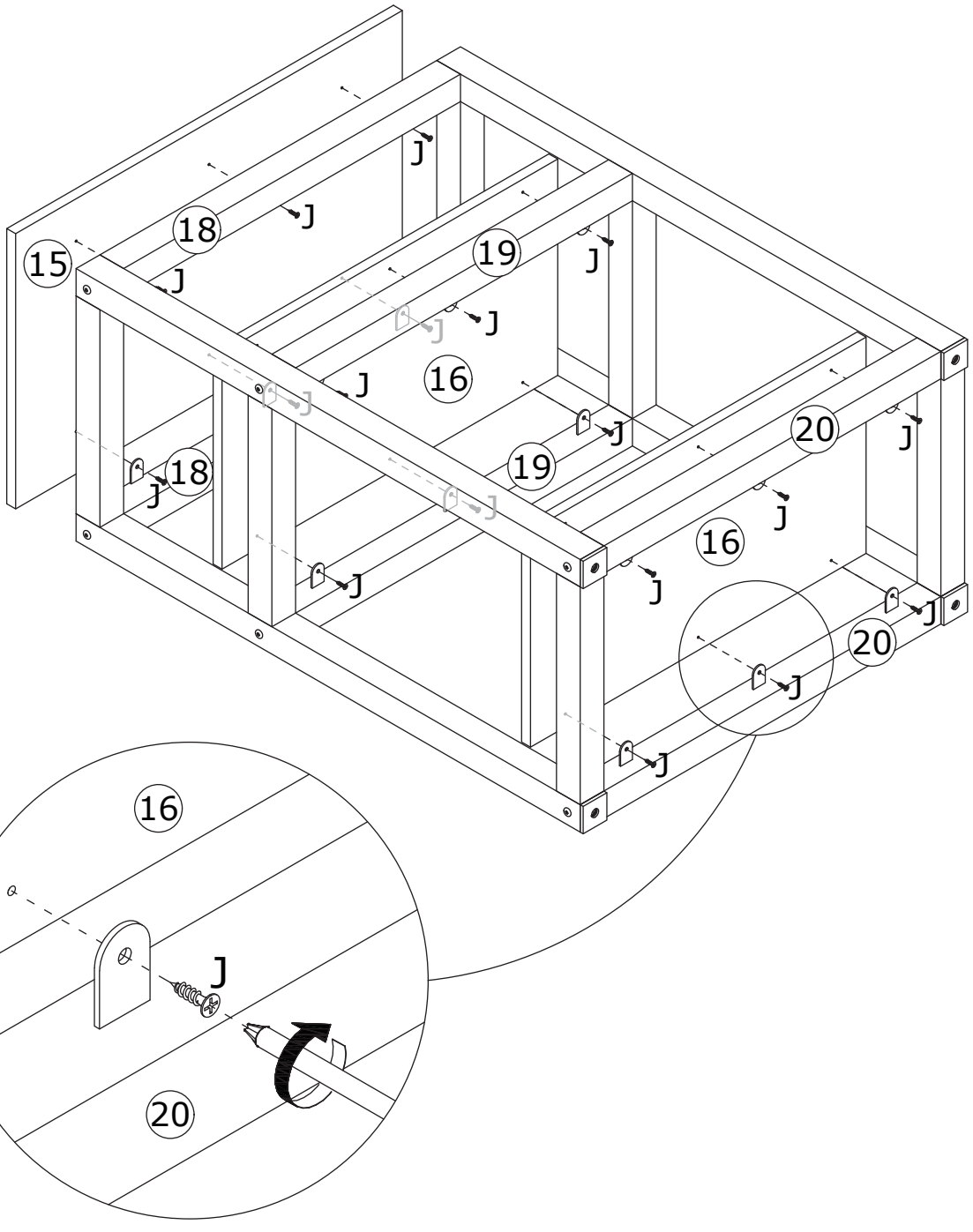

48

| W x 4 | X x 1 | |
|---|---|---|
|  |  | |

Install wheel (W) to part 17.

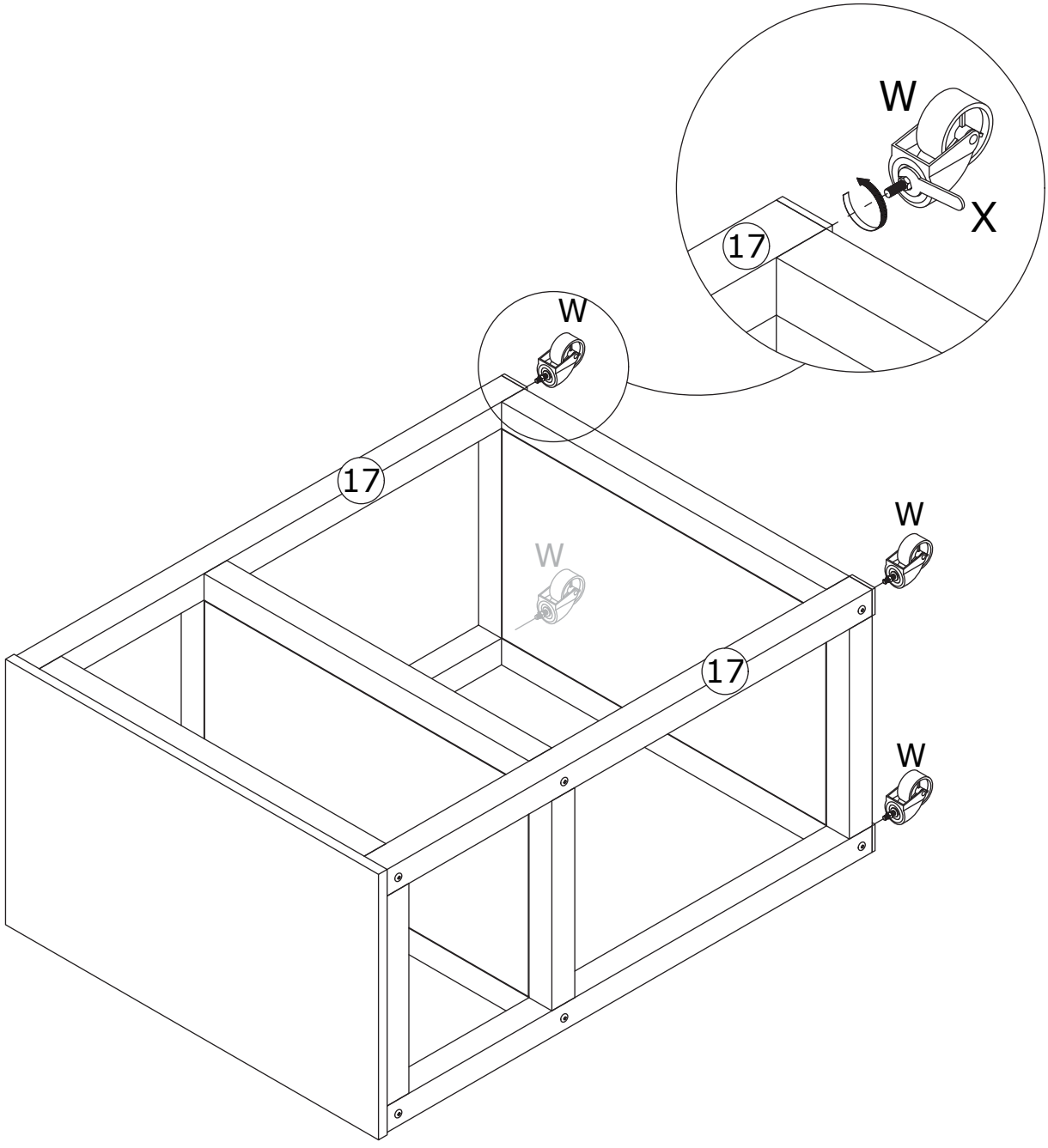

49

# Option A

Method A: Assemble the cabinet.

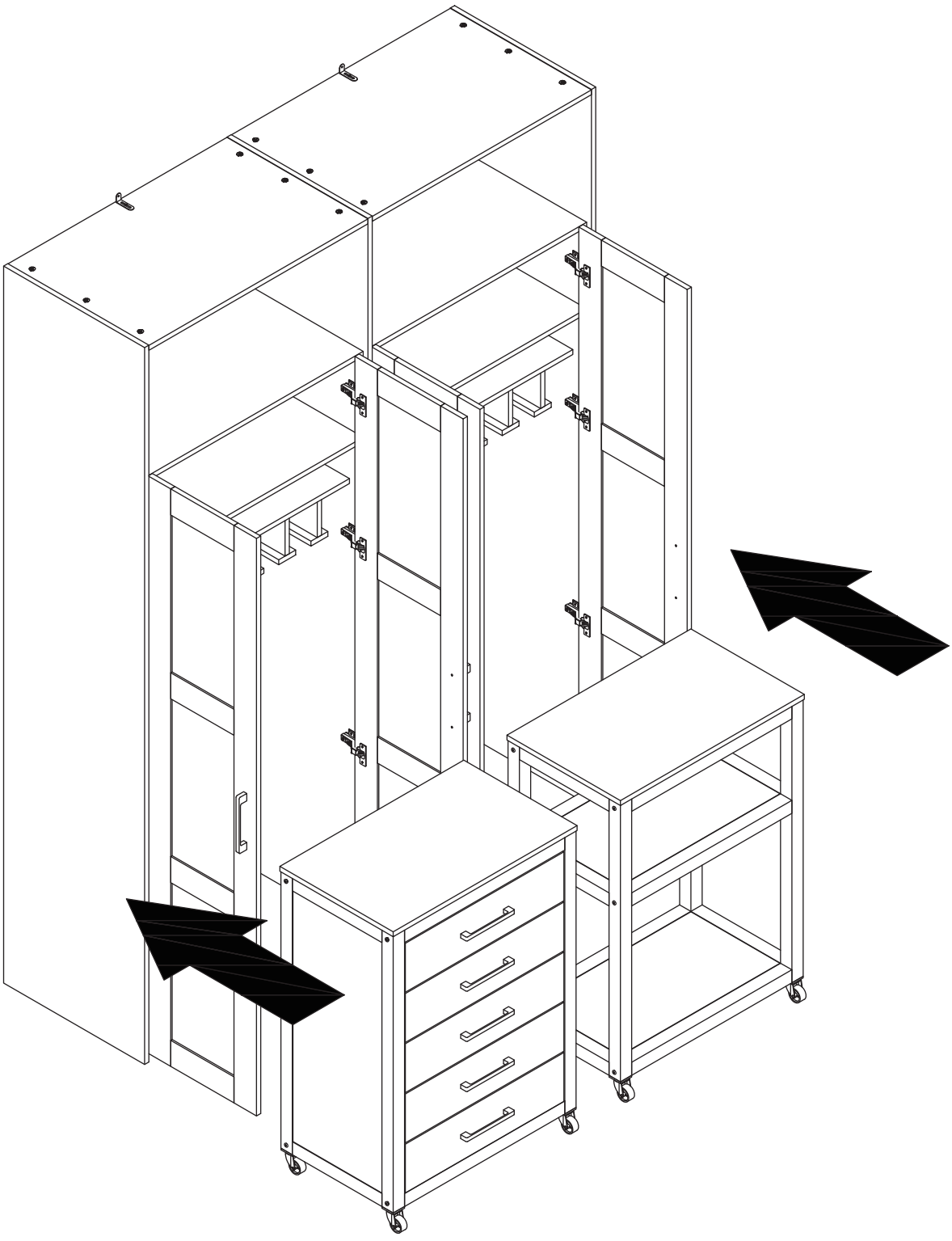

50

# Option B

Method B: Assemble the cabinet.

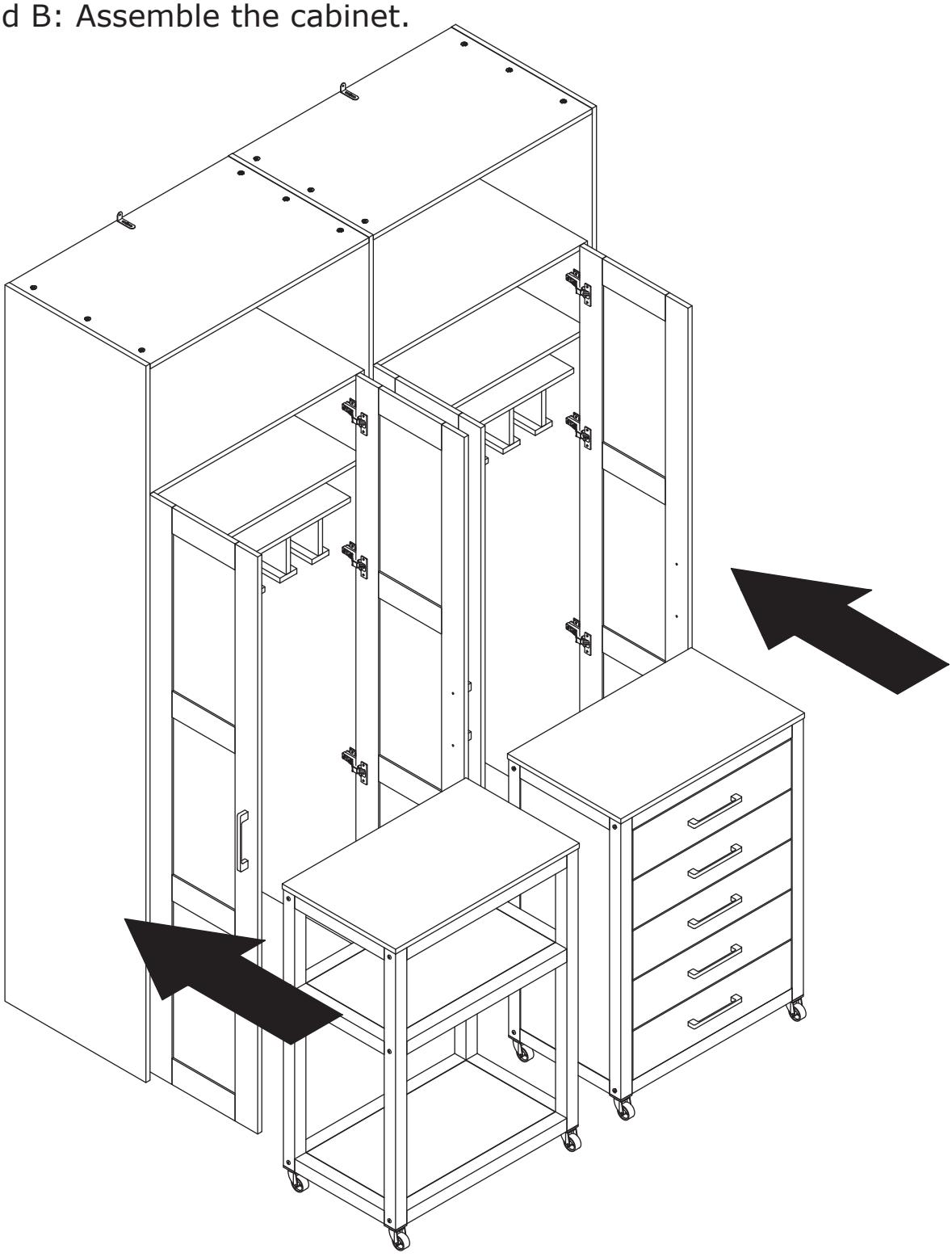

# 51

If the door panels are not aligned, please adjust the screws on the hinges according to the illustration.

Or you can search this link to view the teaching video.
https://youtu.be/n0Lb36SoODM

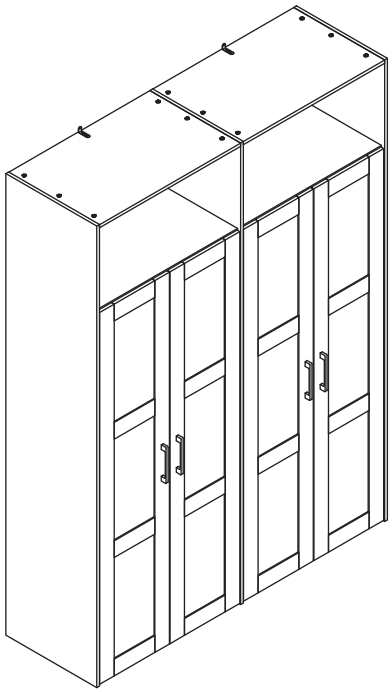

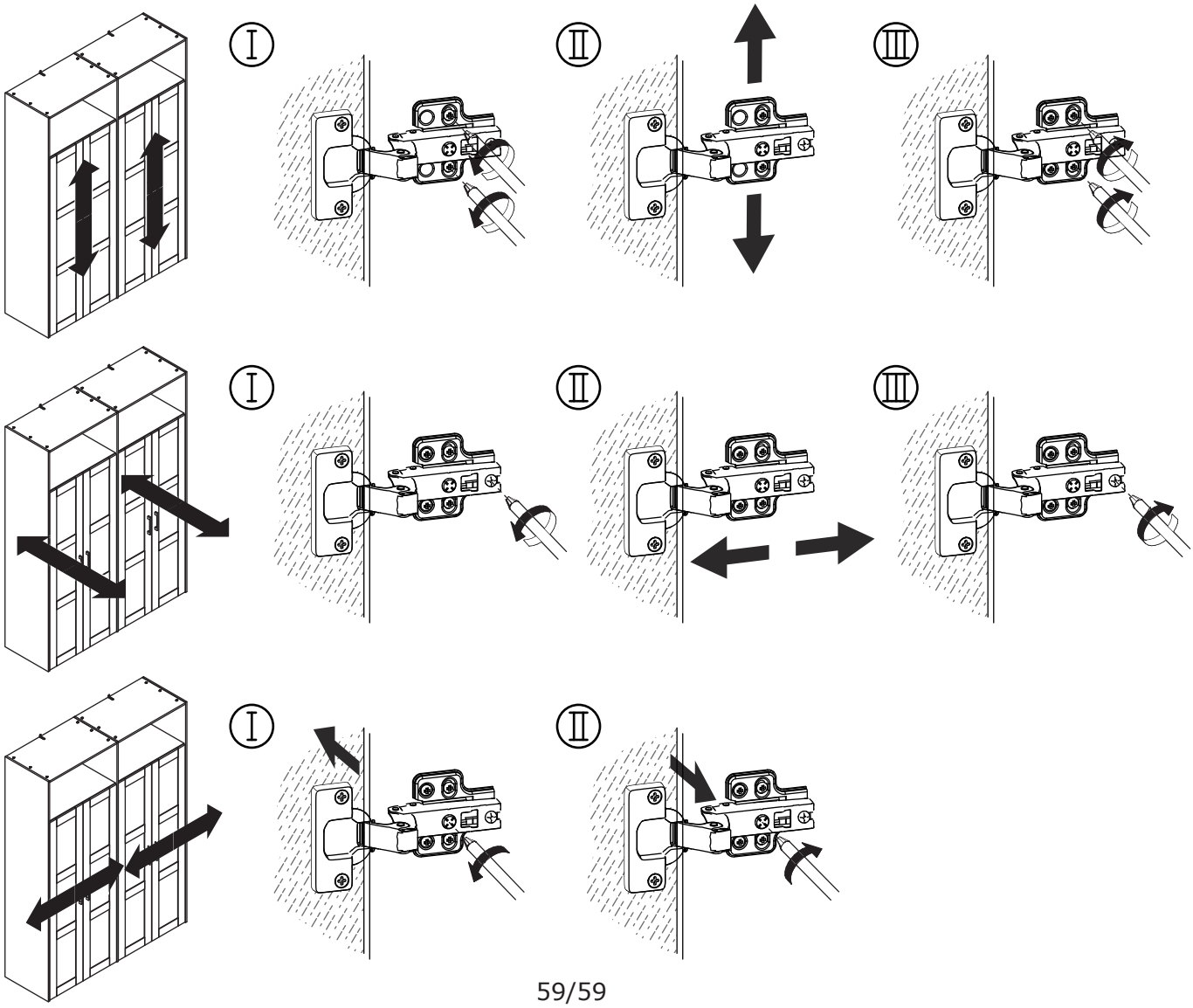

# WARRANTY

## WARRANTY CLAIMS

- There is a 30-day warranty for broken furniture or any other problems that do not work properly. The warranty will start from the date of purchase which must be verified by proof of purchase.

- Before making a claim, we may be able to answer your query, simply call us. Please leave your purchase order number, along with some details of the problem, if you want a replacement part. We will arrange within 48 hours. If there is out of stock, we will reply with a shipping date.

- The product must be used in accordance with the instructions provided. For health reasons.

- For other reasons, if the furniture needs to be returned, it must be cleaned and dried and operated within 30 days of receipt.

## Type of Warranty Claim

- Failure to follow the furniture instructions will invalidate the warranty. Attention please.

- Does not include damage during installation, but includes damage during transportation.

## Scope of responsibility

- Shall not bear any responsibility for misuse or user damage and / or loss of parts during the installation of furniture.

- After using, the damage and scratches of the furniture are not covered by the warranty.

## The Warranty Relates to All Bought in The Us and Covers The Following Areas

- Sheet parts: 1 month from the date of purchase.

- Electrical parts: 1 month from the date of purchase.

# RETURNS

## CHANGED YOUR MIND AND NEED TO RETURN YOU ITEM?

## PLEASE FOLLOW THE BELOW INSTRUCTIONS:

- If you have purchased and have simply changed your mind, follow the retailer's instructions for returns.

## DEFECTIVE ITEMS

- If your item is defective in any way, i.e. it doesn't work but you can't identify why, in the first instance, please call us.

## DAMAGED ITEMS

- If you receive an order with obvious shipping damage from the retailer, then we suggest the delivery is refused. If the delivery has been accepted and then shipping damage is found, please follow the specific instructions advised by the retailer.
  In all circumstances please save all packaging material and paperwork for the order. Please be aware that if you dispose of packaging material or attempt to return the merchandise without contacting the fulfiller, you jeopardise your chances of making a claim, and you may not receive a credit for the return.

## AFTER-SALES CONTACT



adelahu@fufugaga.com



208-820-0068