TV Cabinets

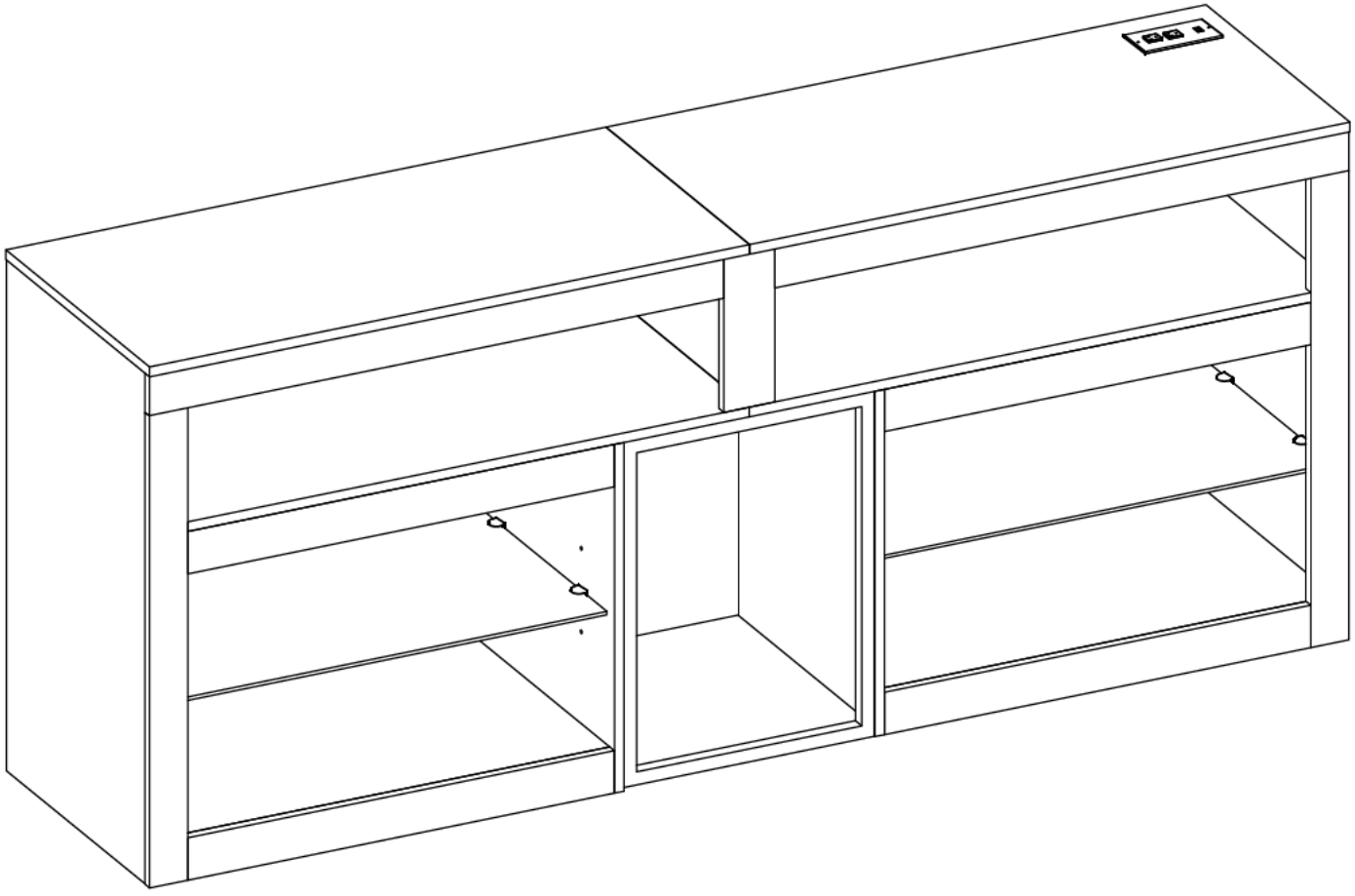



IMPORTANT INFORMATION!

please read the entire manual before starting to assemble and/or using this product.follow the manual thoroughly and keep it for further reference.



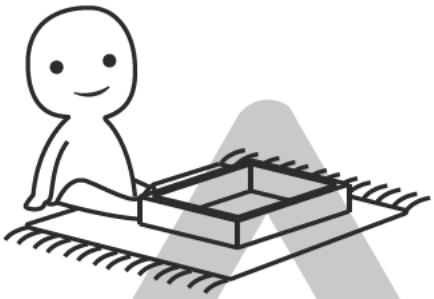

AVOID SCRATCHES!

In order to avoid scratching this furnuture should be assembled on a soft layer-could be a rug.



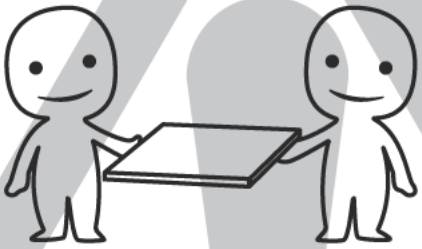

IMPROVE EFFICIENCY !

Try to find a partner to install with you, which can speed up the installation efficiency and shorten the time.

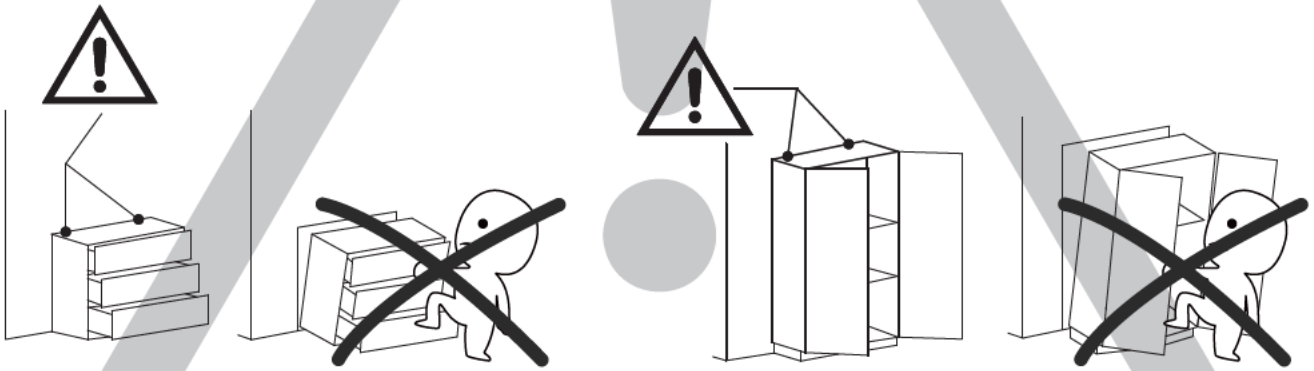

ANTI-TOPPLE WARNING !

Overturned furniture can cause serious or fatal crush injuries. To prevent tipping over, be sure to use the wall attachment, if not included with this product. Please purchase the wall attachment that fit your wall. If unsure, seek professional advice. Please read and follow each step of the instructions carefully.

IMPORTANT !

It is important that any product which is assembled using any kind of screw is re-tightened 2 weeks after assembly,and once every 3 months - in order to assure stability through-out the lifespan of the product.

For regular maintenance and cleaning of the product, for the frame, please use a rag dipped in neutral detergent to fully wipe it, and then dry it with a clean rag.For glass materials, wipe with a rag dampened with water glass cleaner, and then dry with a dry rag.

Do not use an electric screwdriver, and do not use too much force when installing, because the board is easy to break.

Board Identification

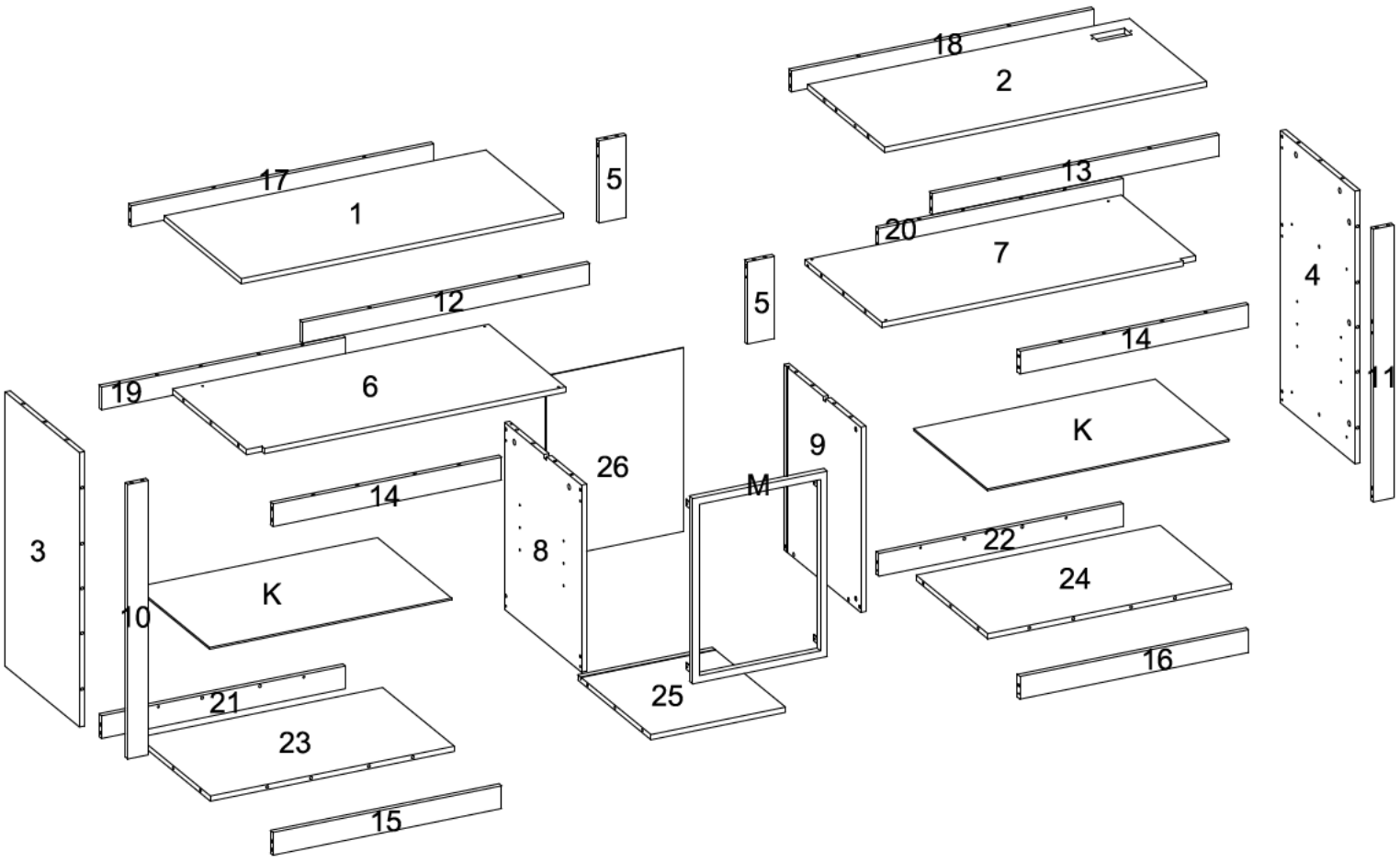

PARTS LIST

1 ×1

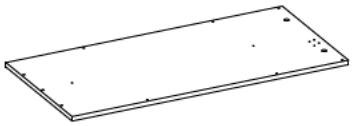

2 ×1

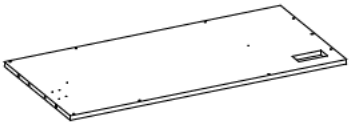

3 ×1

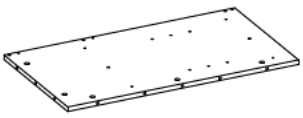

4 ×1

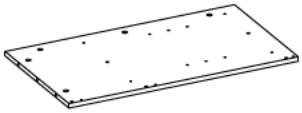

5 ×2

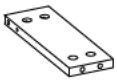

6 ×1



7 ×1

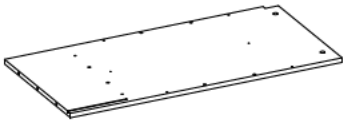

8 ×1

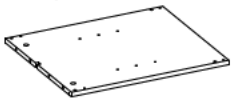

9 ×1

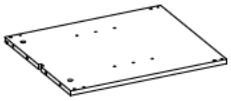

10 ×1

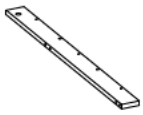

11 ×1

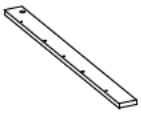

12 ×1



13 ×1



14 ×2



15 ×1



PARTS LIST

16 ×1



17 ×1



18 ×1



19 ×1



20 ×1



21 ×1



22 ×1



23 ×1



24 ×1

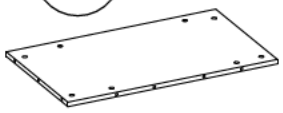

25 ×1

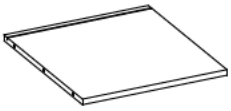

26 ×1

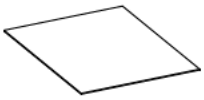

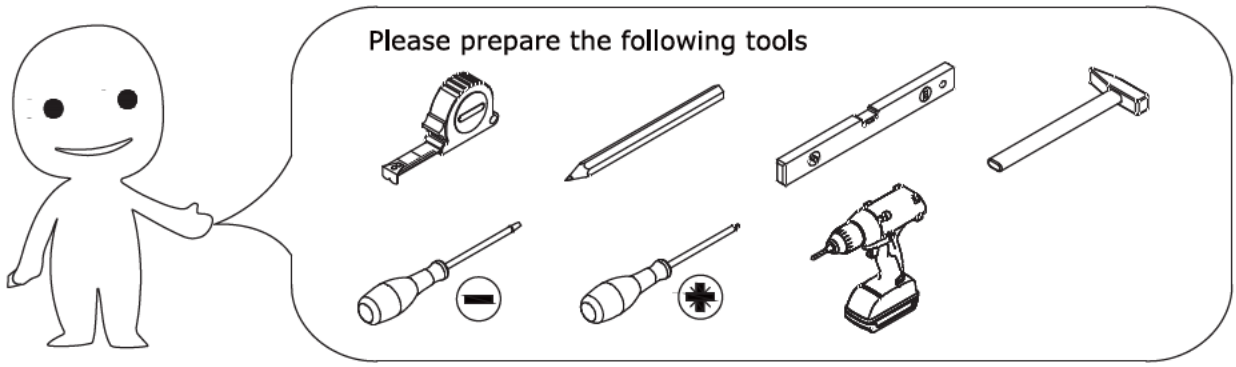

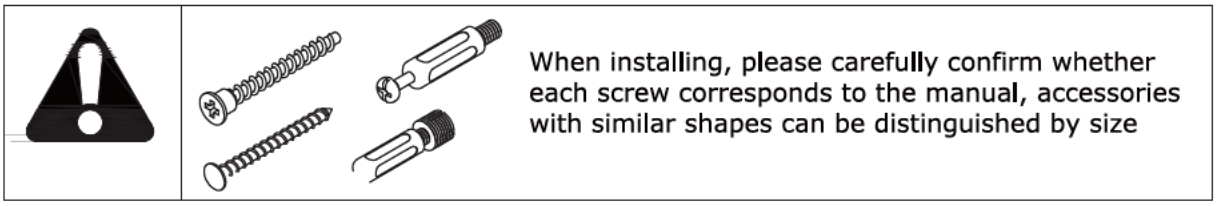

A 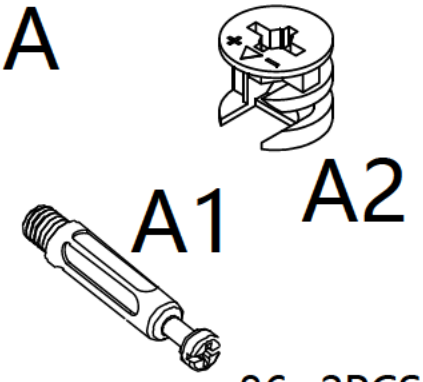 A1 A2 86+2PCS	B 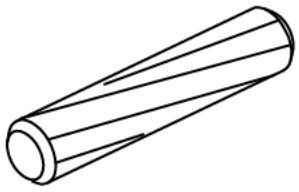 ϕ8*30mm 61+2PCS	C 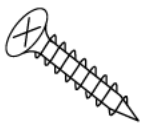 ϕ3.5*14mm 18+1PCS
D 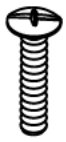 4+1PCS	E 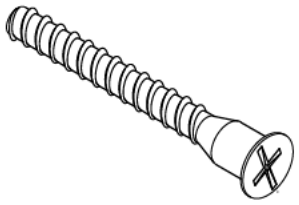 4+1PCS	F 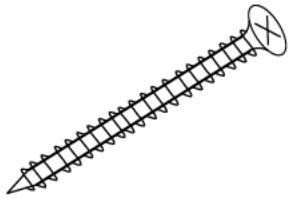 ϕ4*30mm 2PCS
G 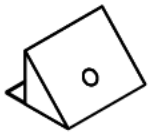 6+1PCS	H  8PCS	I  86+2PCS

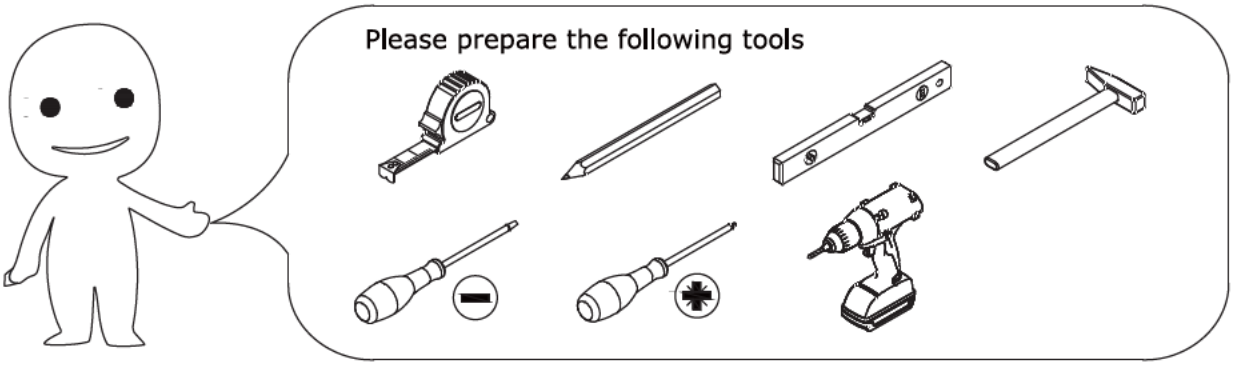

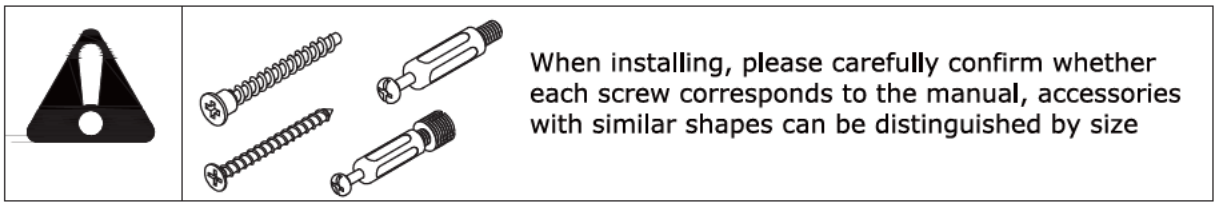

J 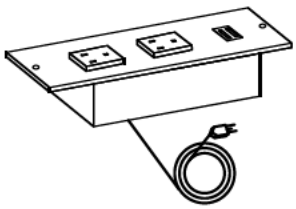 1PC	K 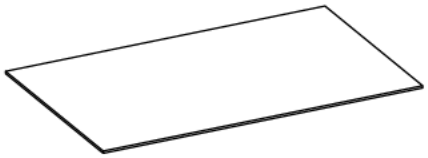 2PCS	L  L1 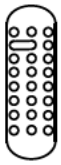 L2  L3*8  L4*8 1PC
M 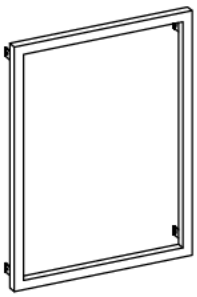 1PC	N  2PCS	O 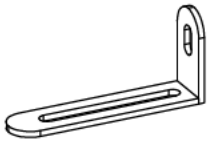 2PCS
P 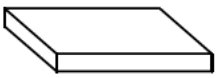 16+2PCS	Q 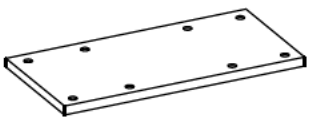 1PC	 X4 Spare plastic hardware

STEP 1



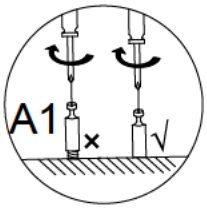

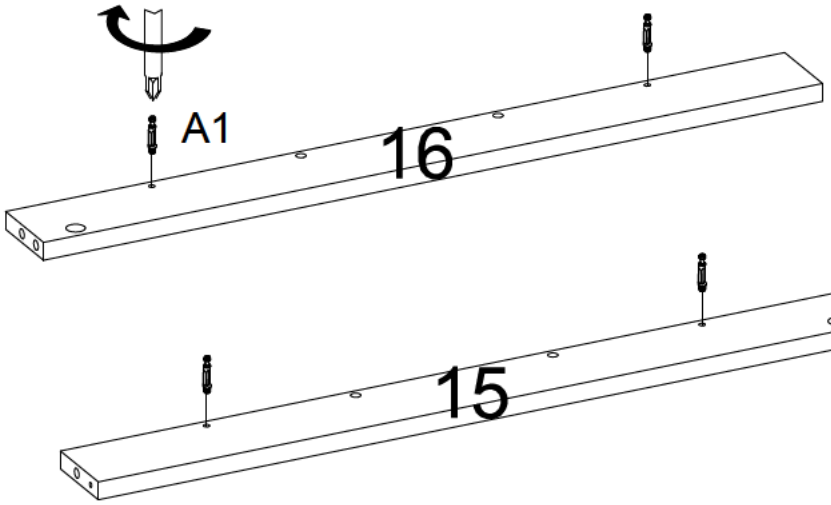

	A1×4PCS

STEP 2



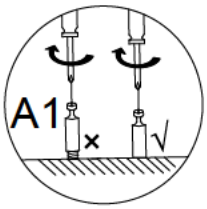

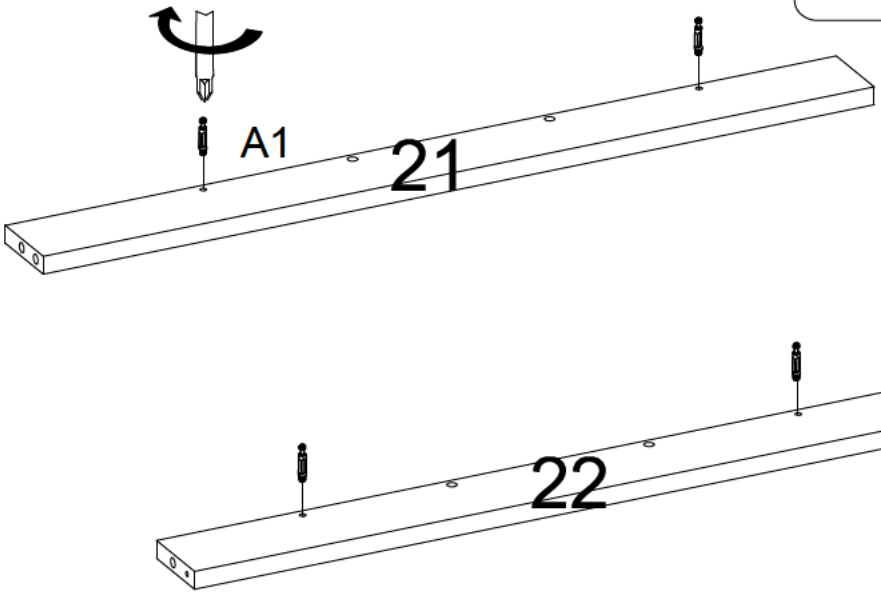

	A1×4PCS

STEP 3

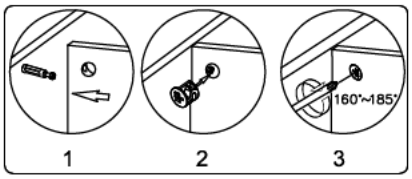

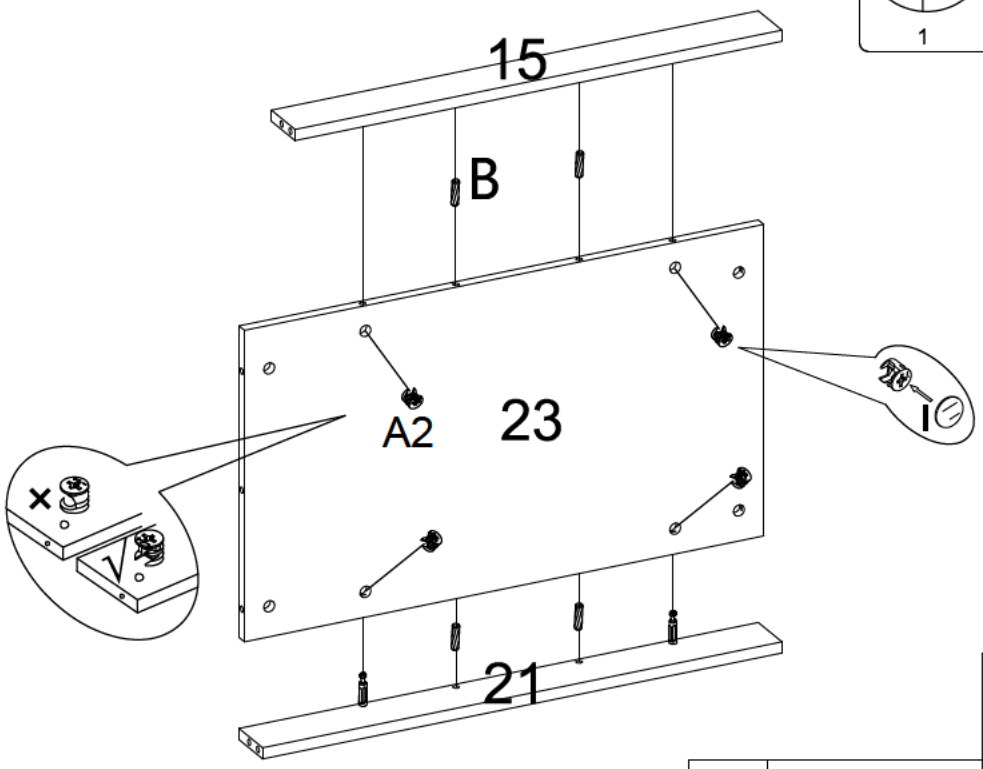

A2×4PCS	
B×4PCS	I×4PCS

STEP 4

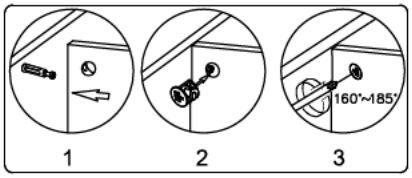

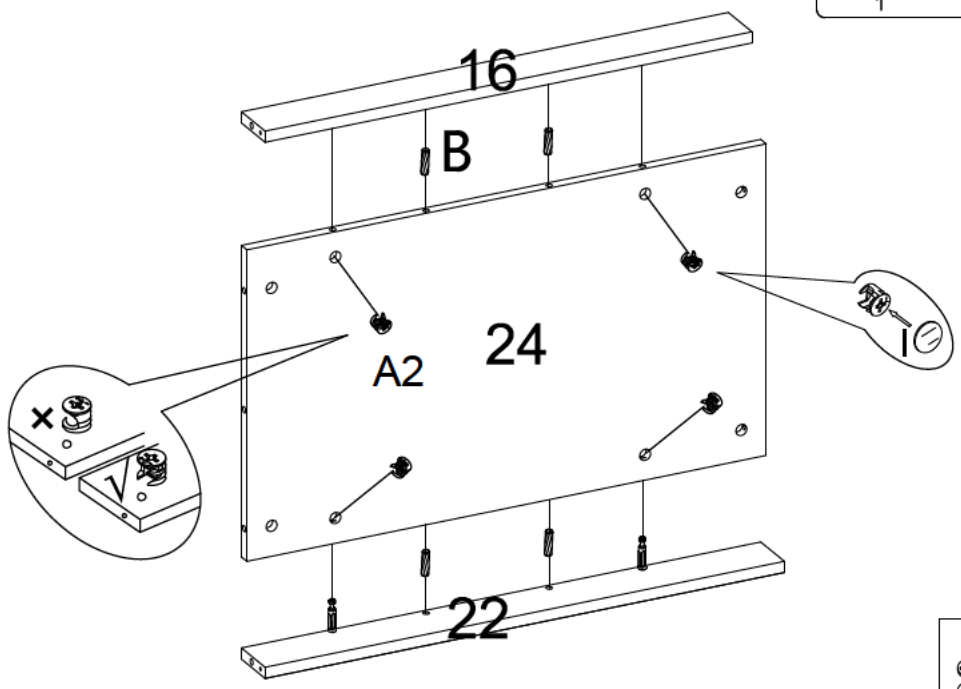

A2×4PCS	
B×4PCS	I×4PCS

STEP 5

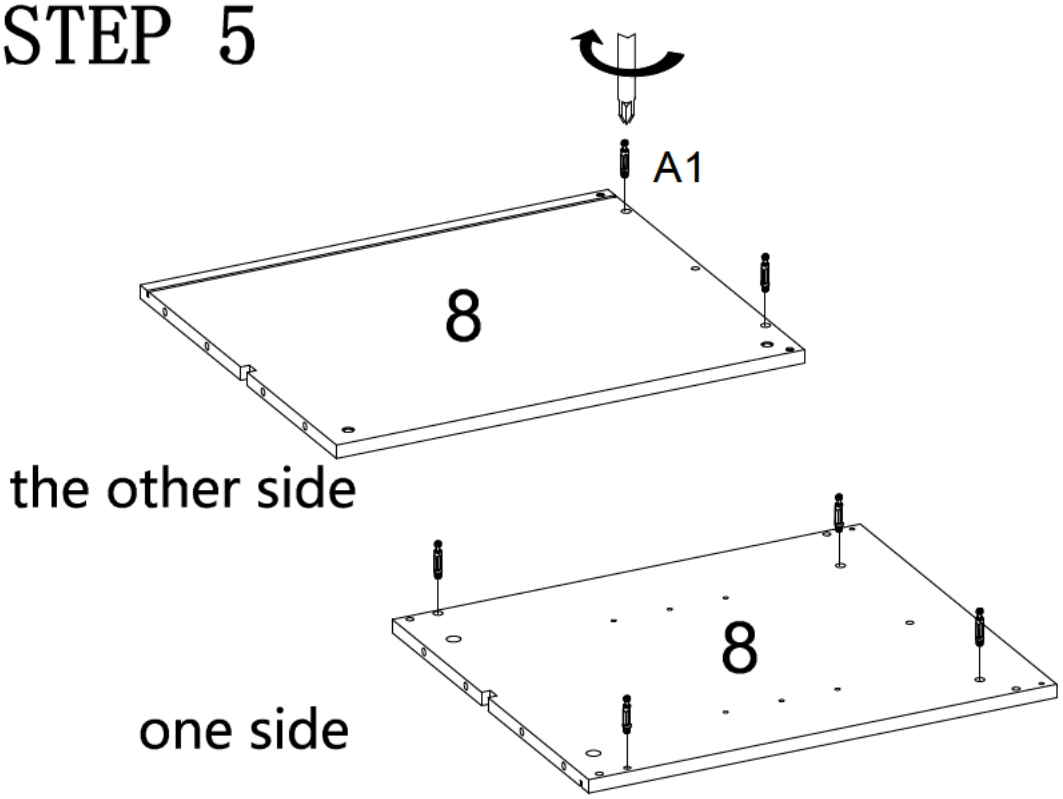

	A1×6PCS

STEP 6

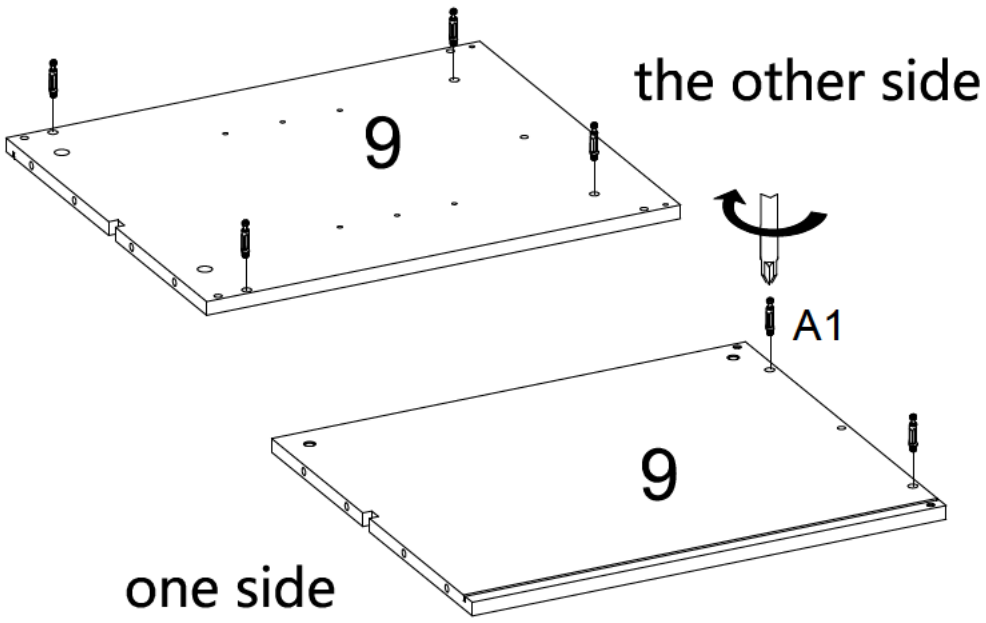

	A1×6PCS

STEP 7

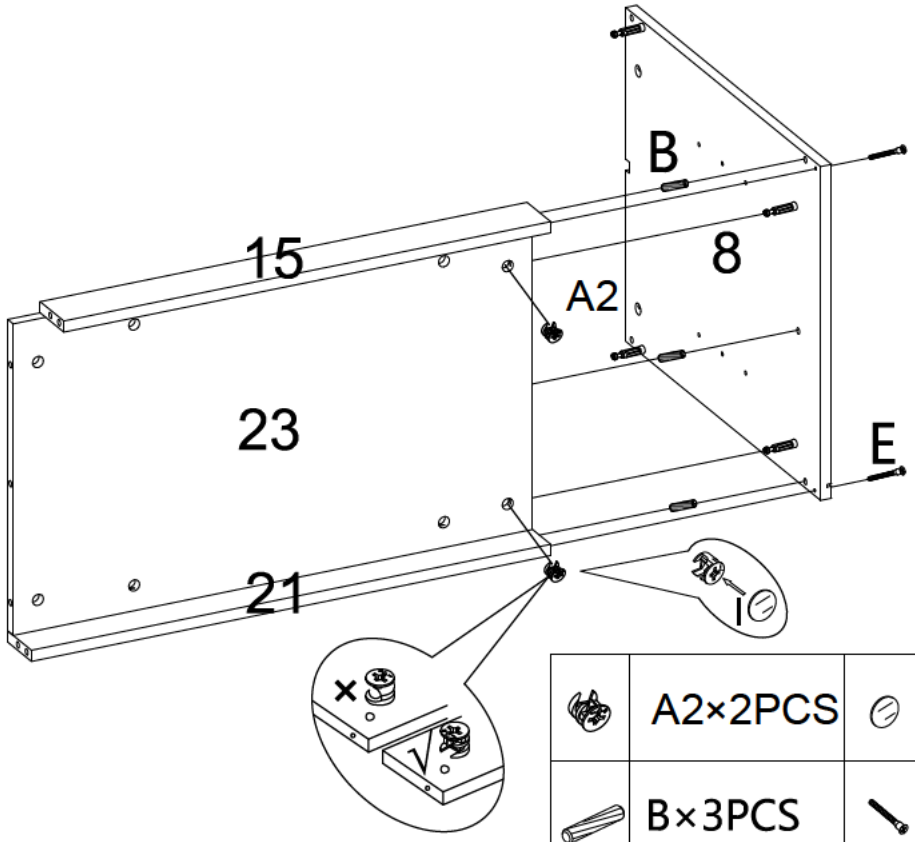

	A2×2PCS		I×2PCS
	B×3PCS		E×2PCS

STEP 8

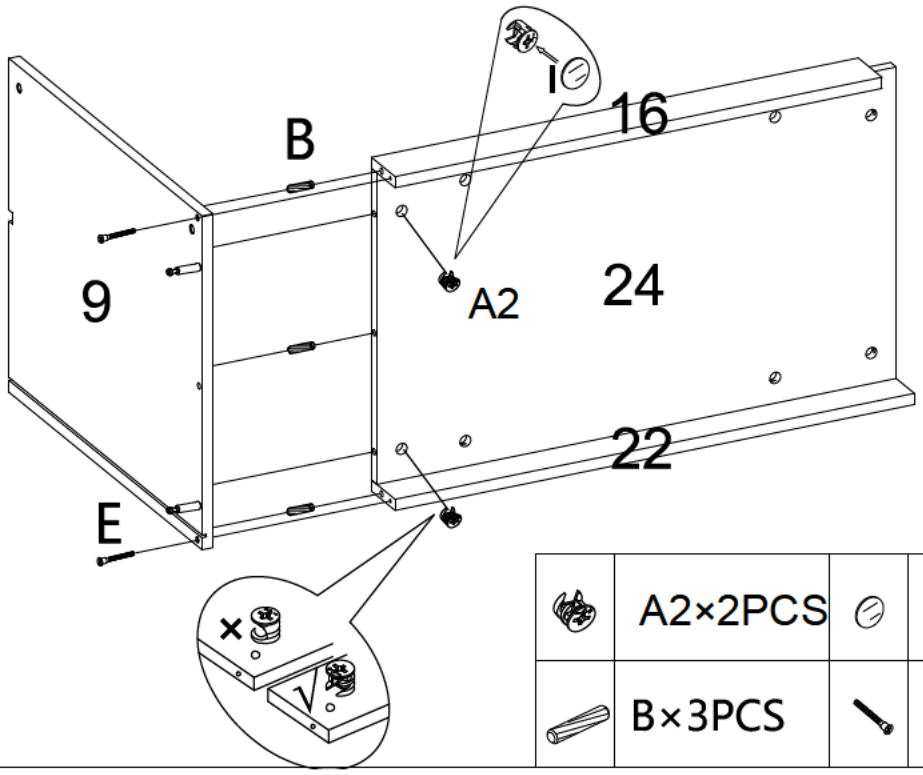

	A2×2PCS		I×2PCS
	B×3PCS		E×2PCS

STEP 9

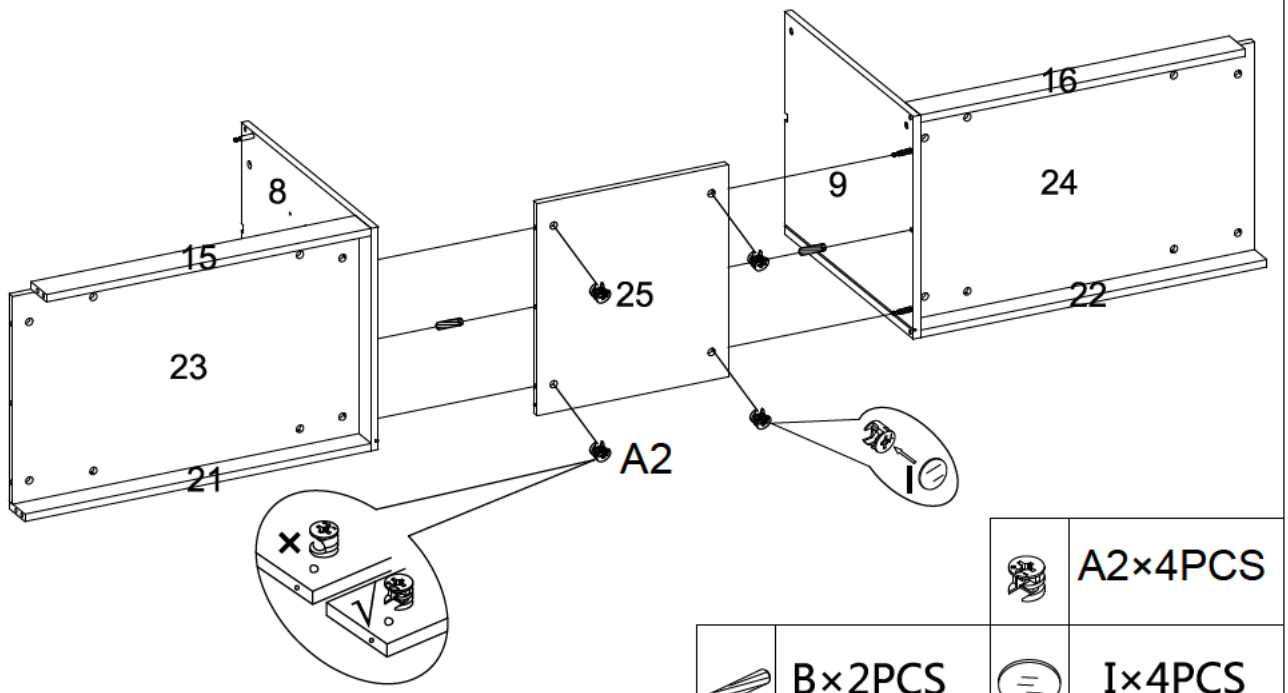

	A2×4PCS		
	B×2PCS		I×4PCS

STEP 10

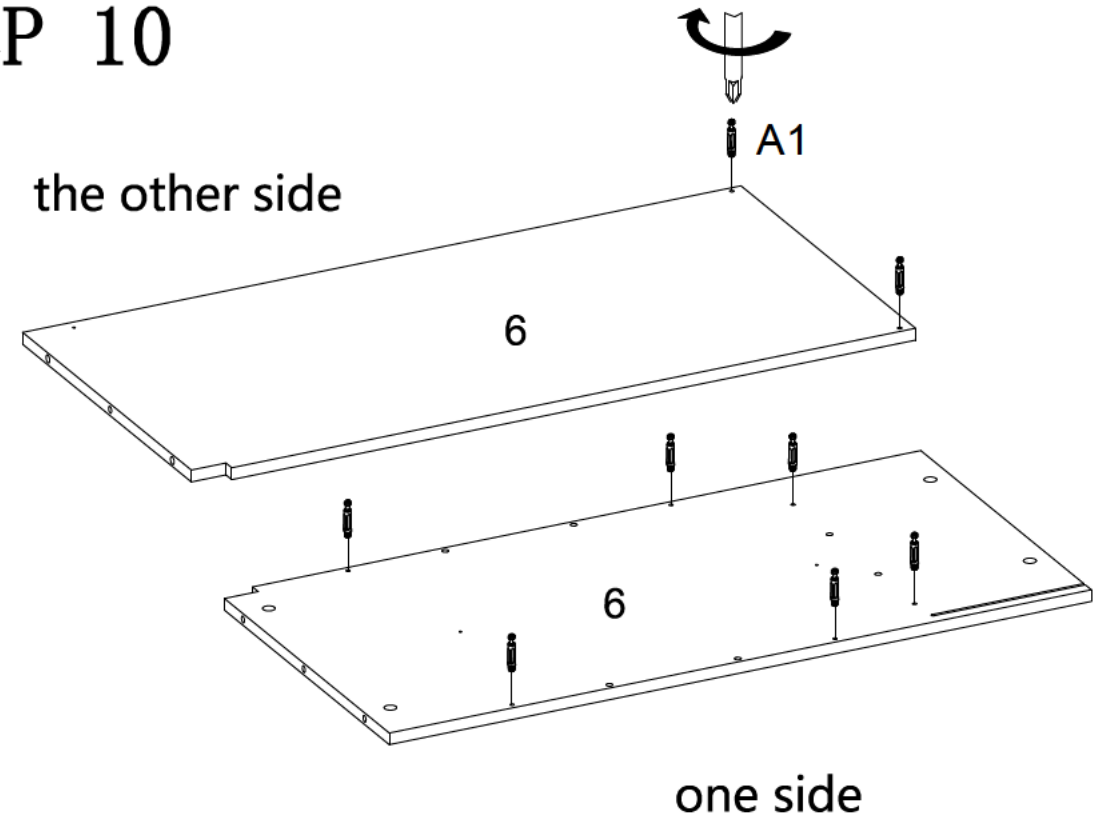

	A1×8PCS

STEP 11

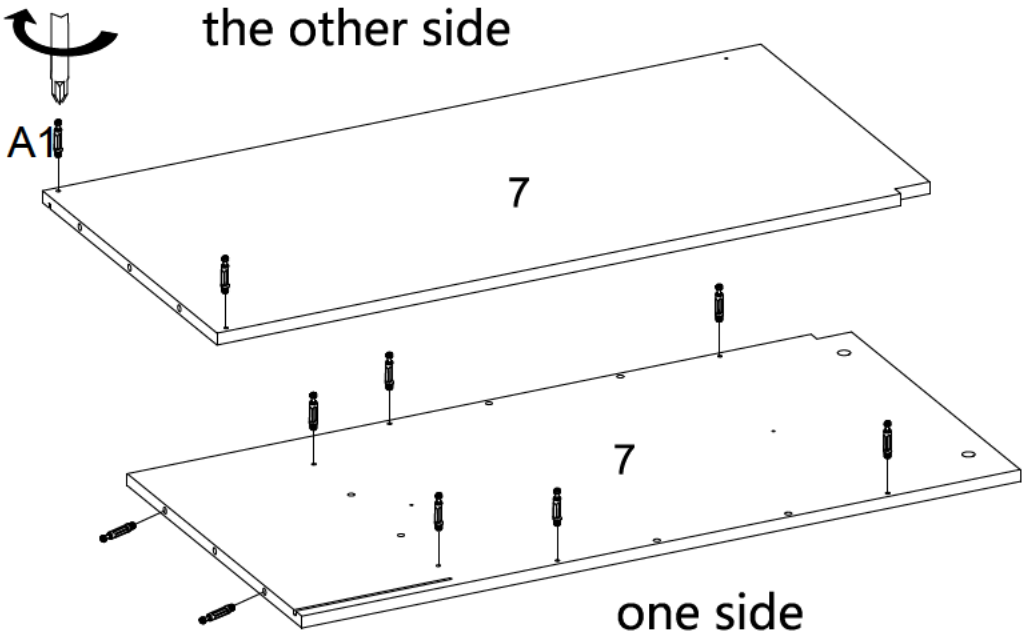

	A1×10PCS

STEP 12

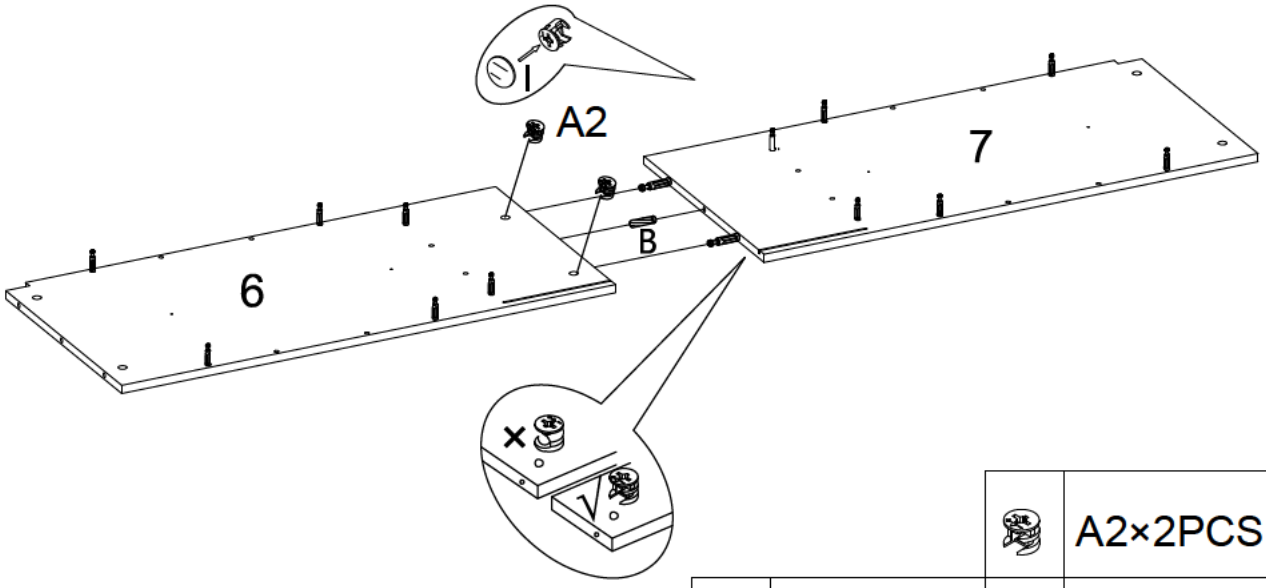

	A2×2PCS
B×1PC	I×2PCS

STEP 13

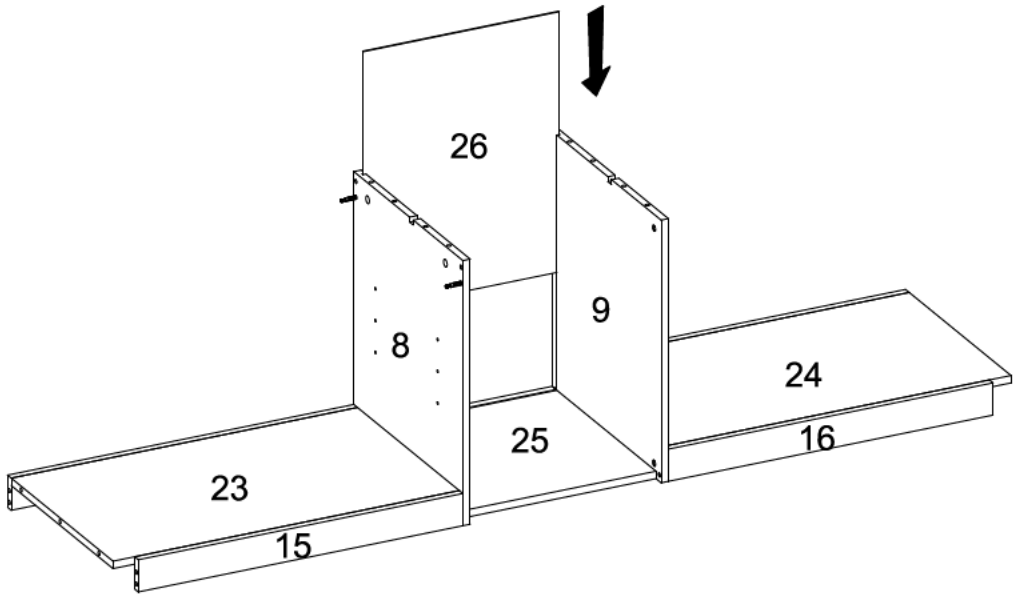

STEP 14

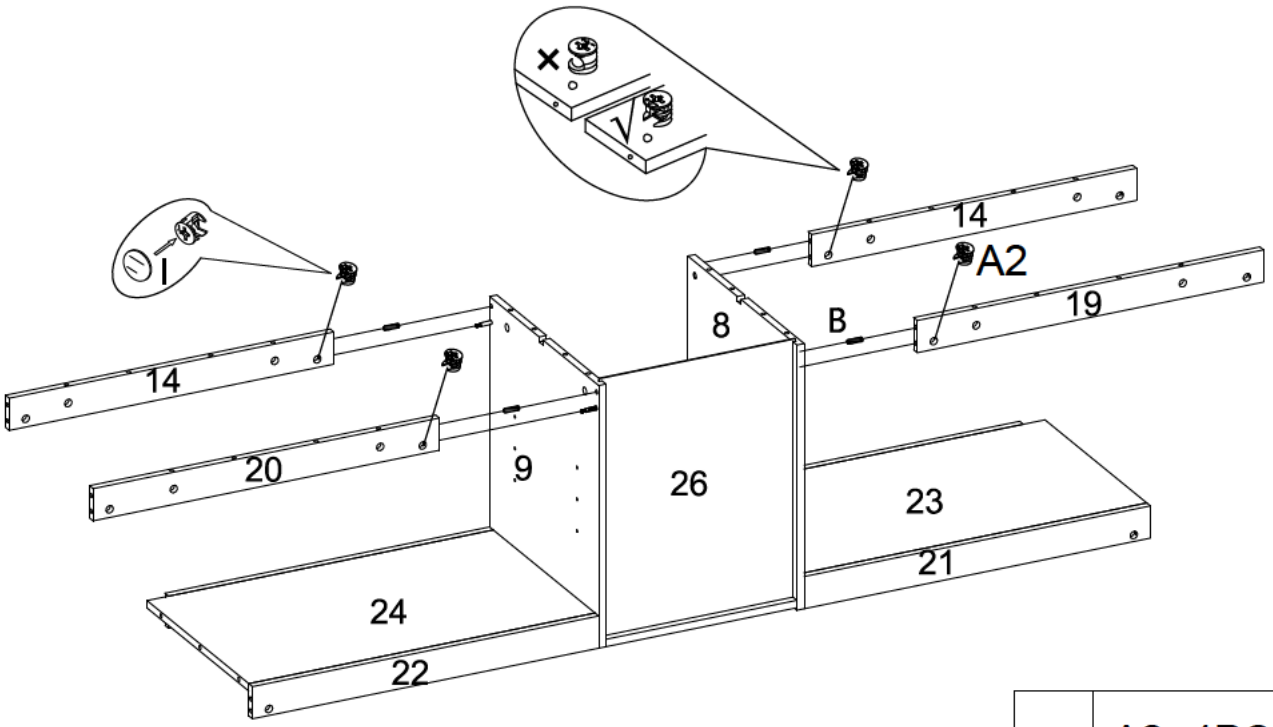

A2×4PCS	
B×4PCS	I×4PCS

STEP 15

Please note that at least two people are required to assist in completing the installation

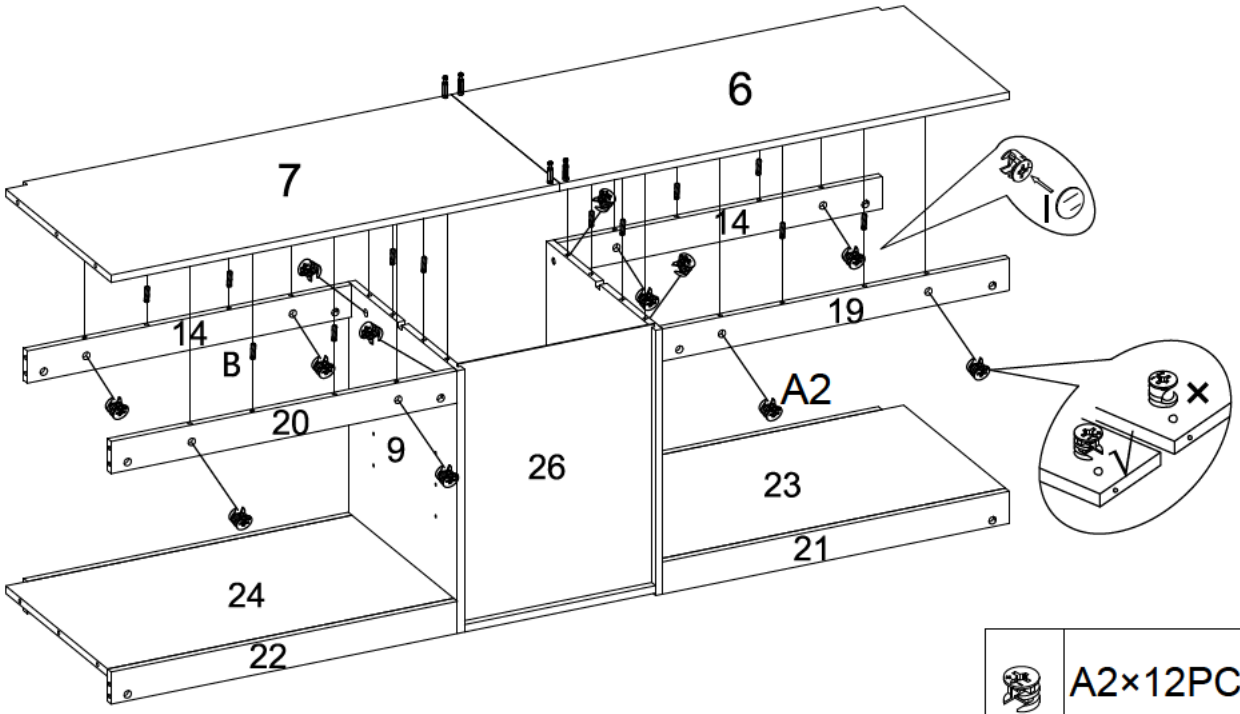

			A2×12PCS
	B×12PCS		I×12PCS

STEP 16

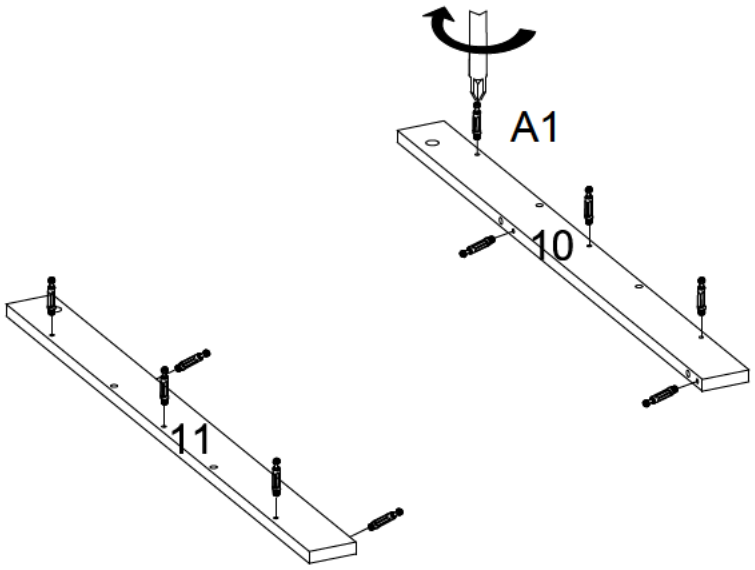

	A1×10PCS

STEP 17

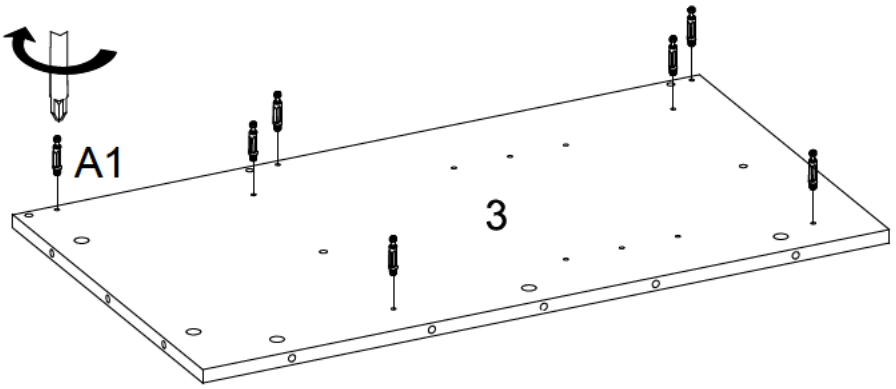

	A1×7PCS

STEP 18

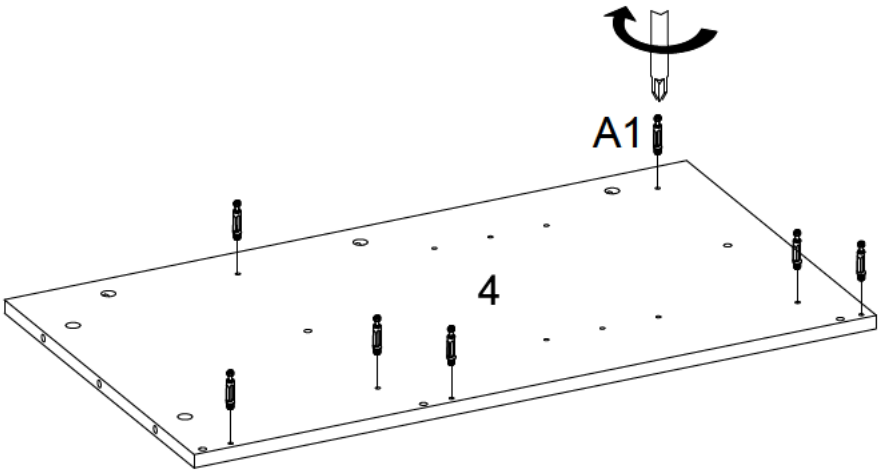

	A1×7PCS

STEP 19

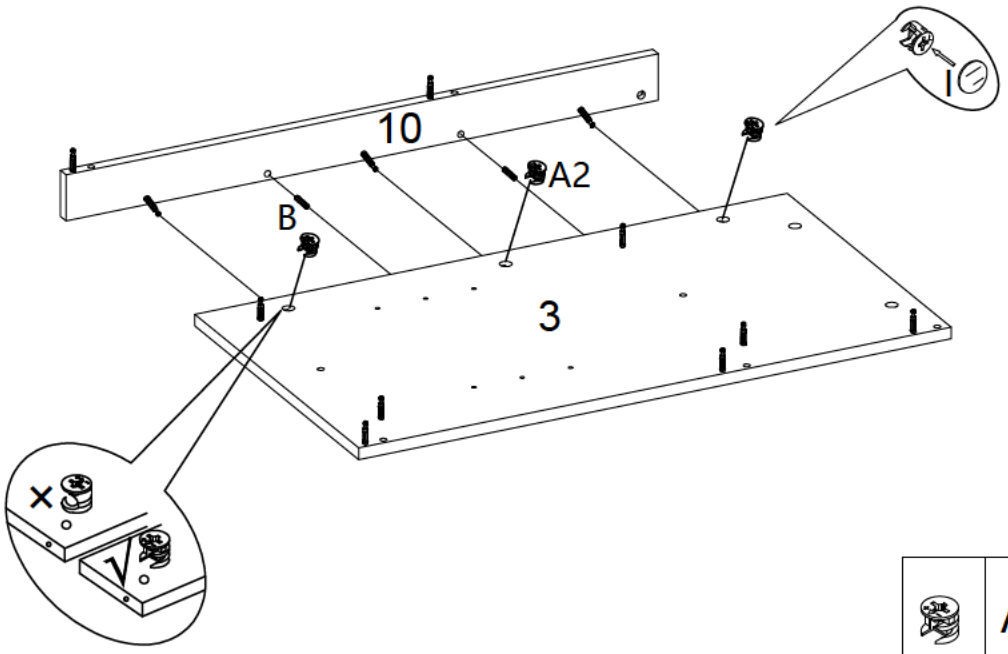

			A2×3PCS
	B×2PCS		I×3PCS

STEP 20

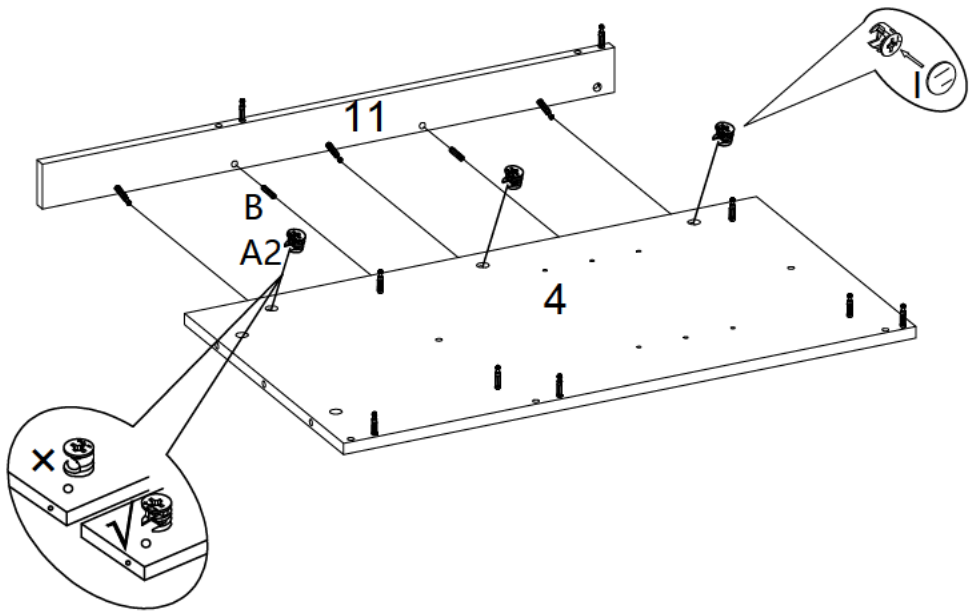

			A2×3PCS
	B×2PCS		I×3PCS

STEP 21

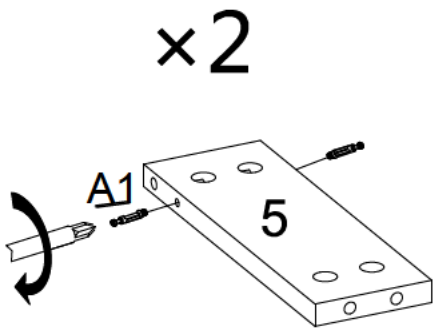

	A1×4PCS

STEP 22

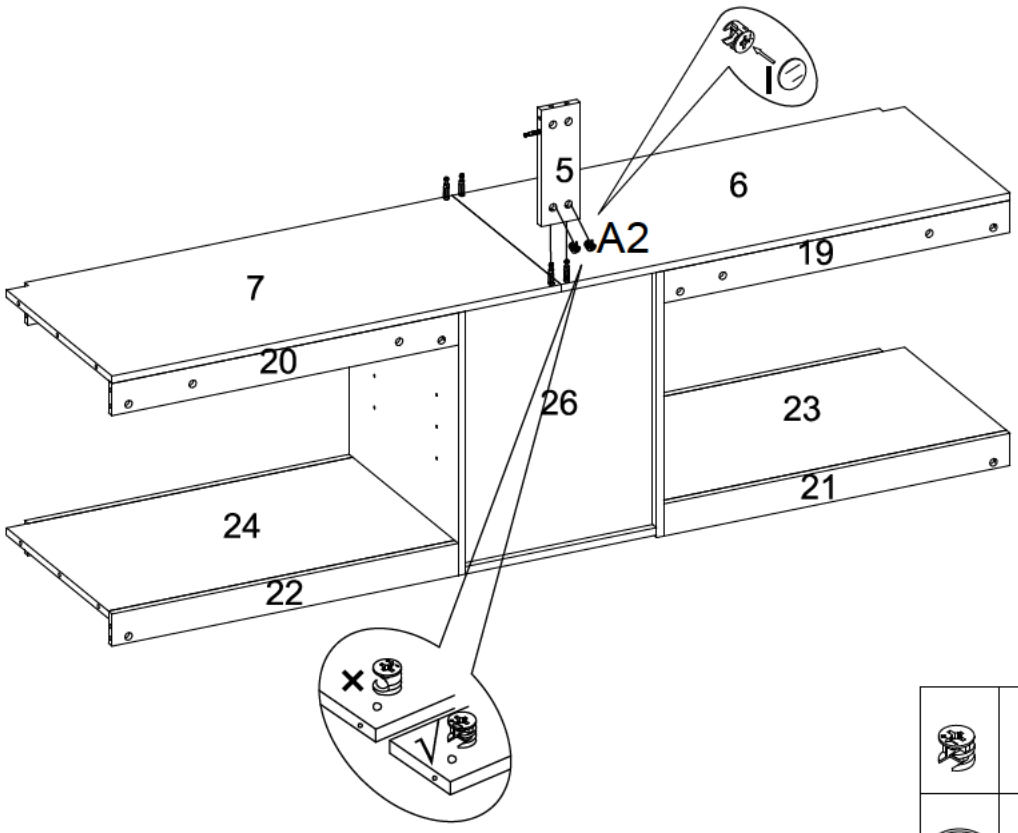

	A2×2PCS
	I×2PCS

STEP 23

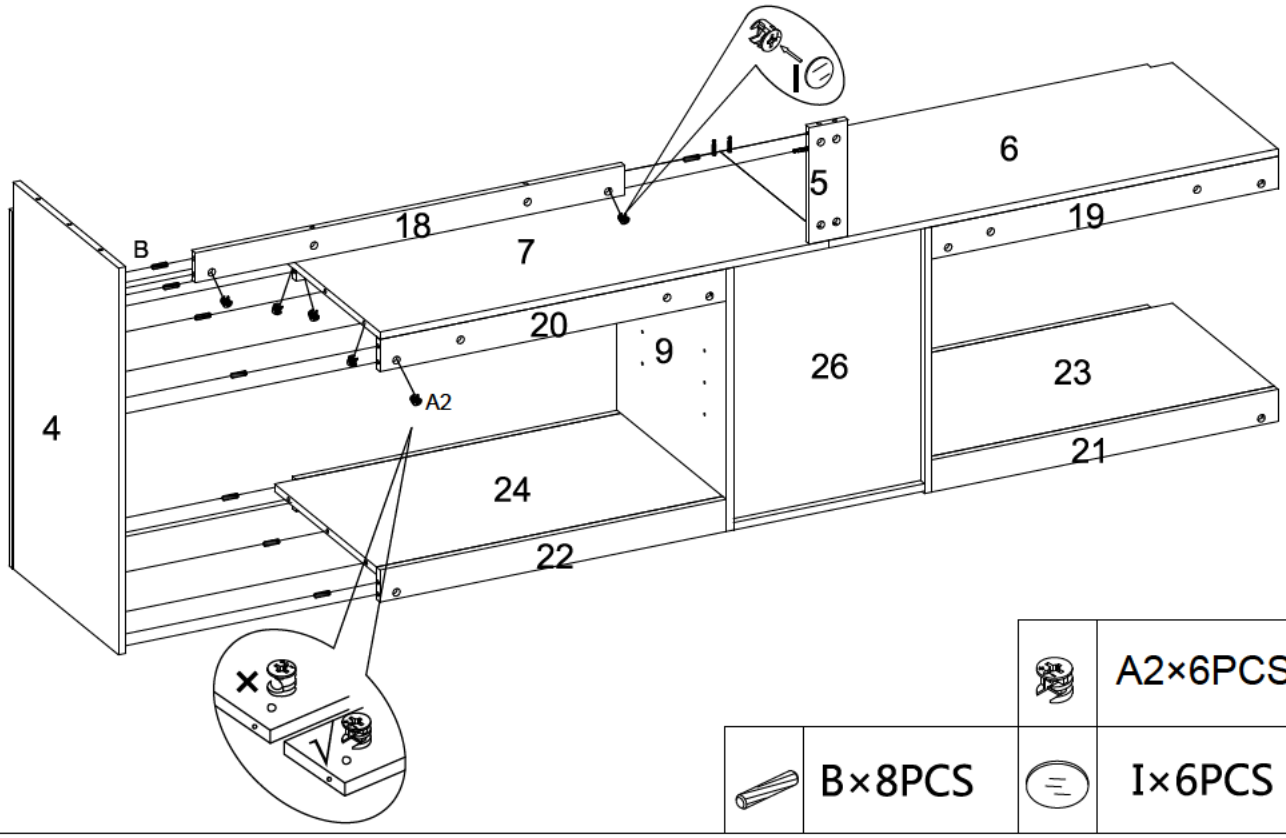

	A2×6PCS		
	B×8PCS		I×6PCS

STEP 24

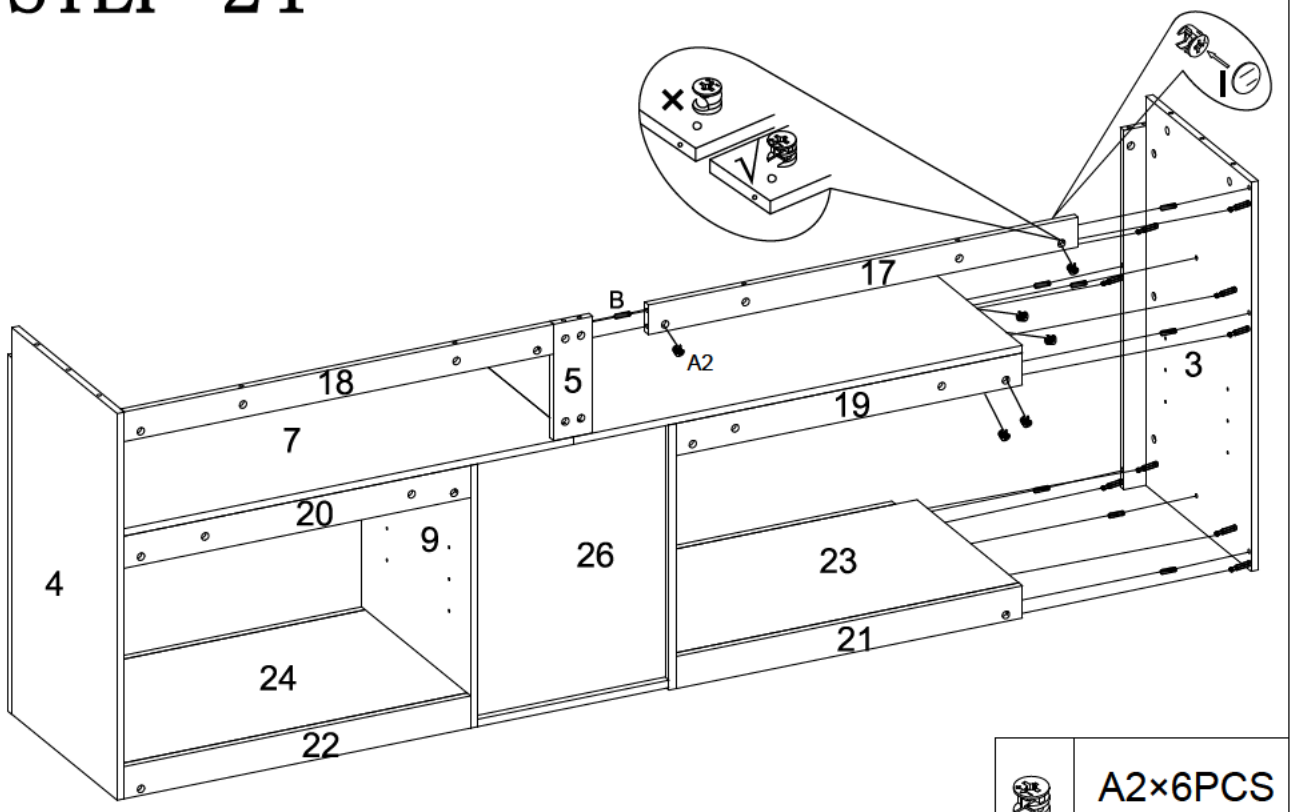

	A2×6PCS		
	B×8PCS		I×6PCS

STEP 25

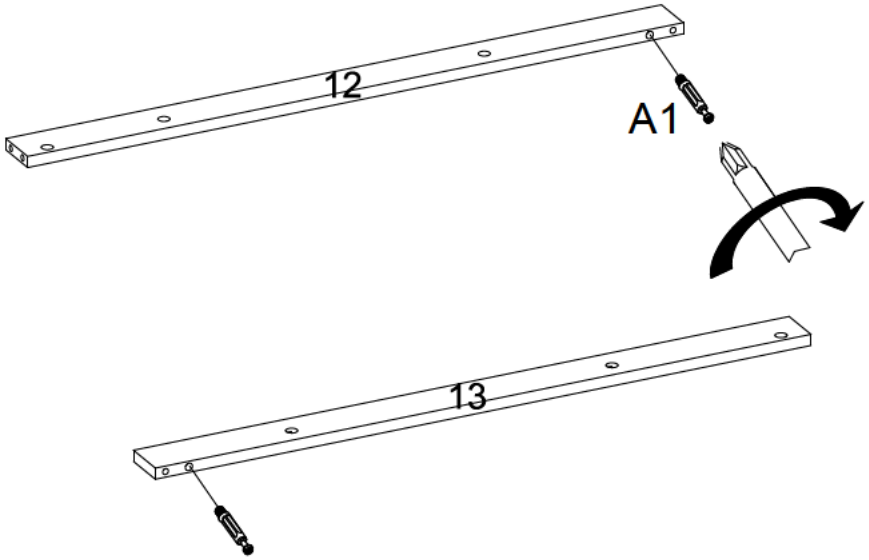

	A1×2PCS

STEP 26

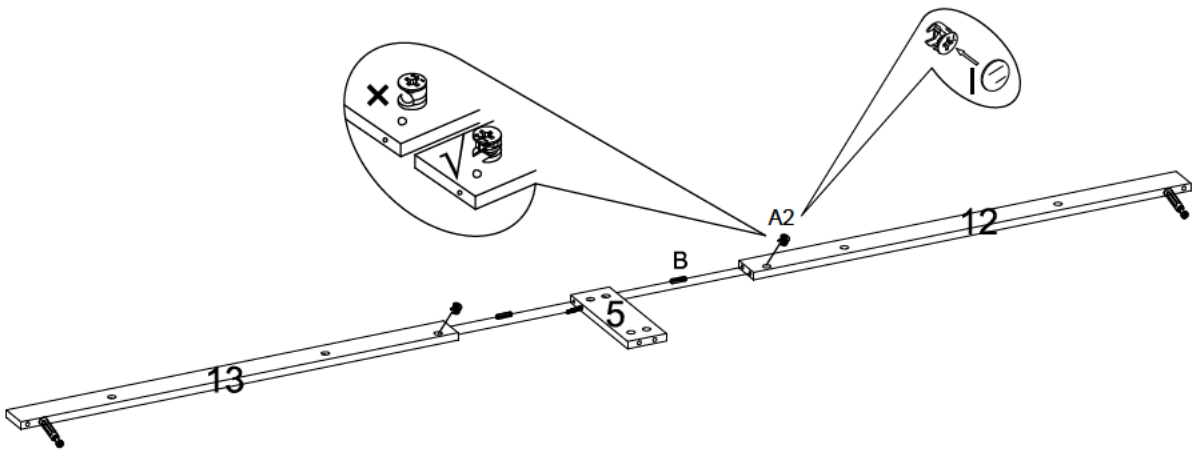

	A2×2PCS
B×2PCS	I×2PCS

STEP 27

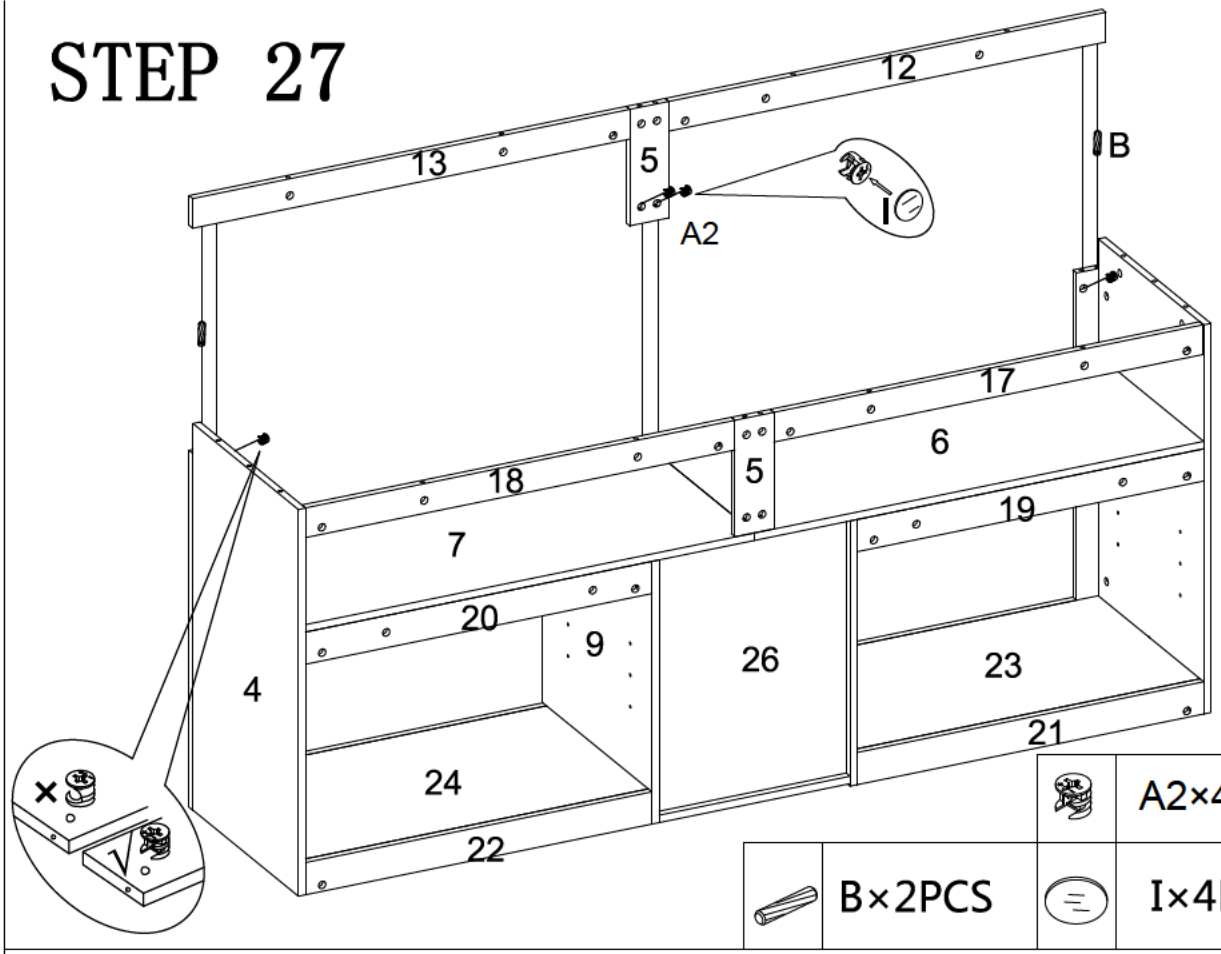

A2×4PCS	
B×2PCS	I×4PCS

STEP 28

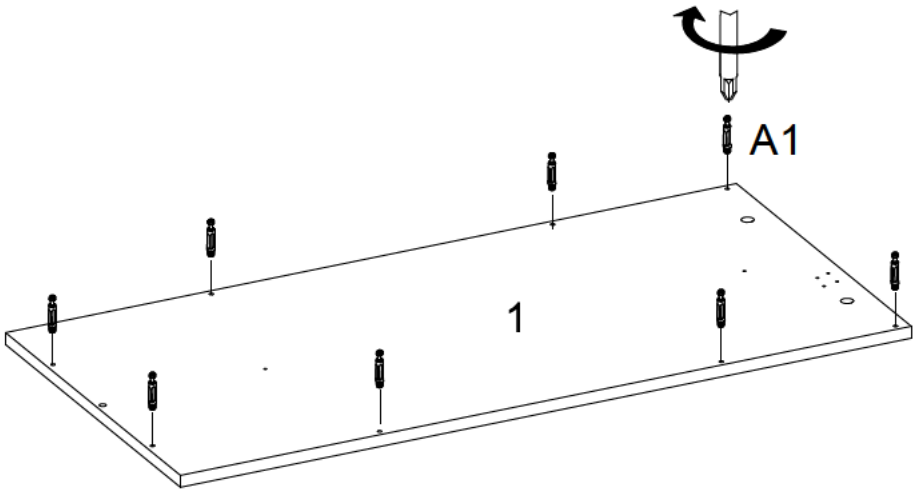

A1×8PCS

STEP 29

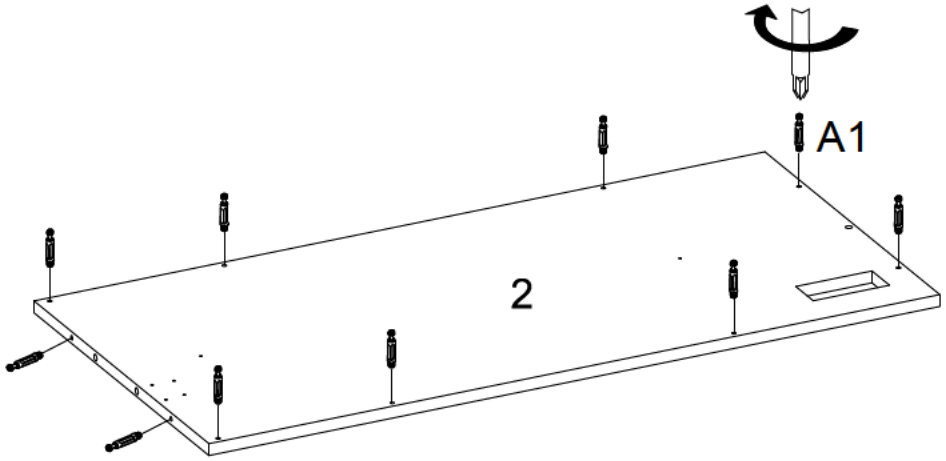

	A1×10PCS

STEP 30

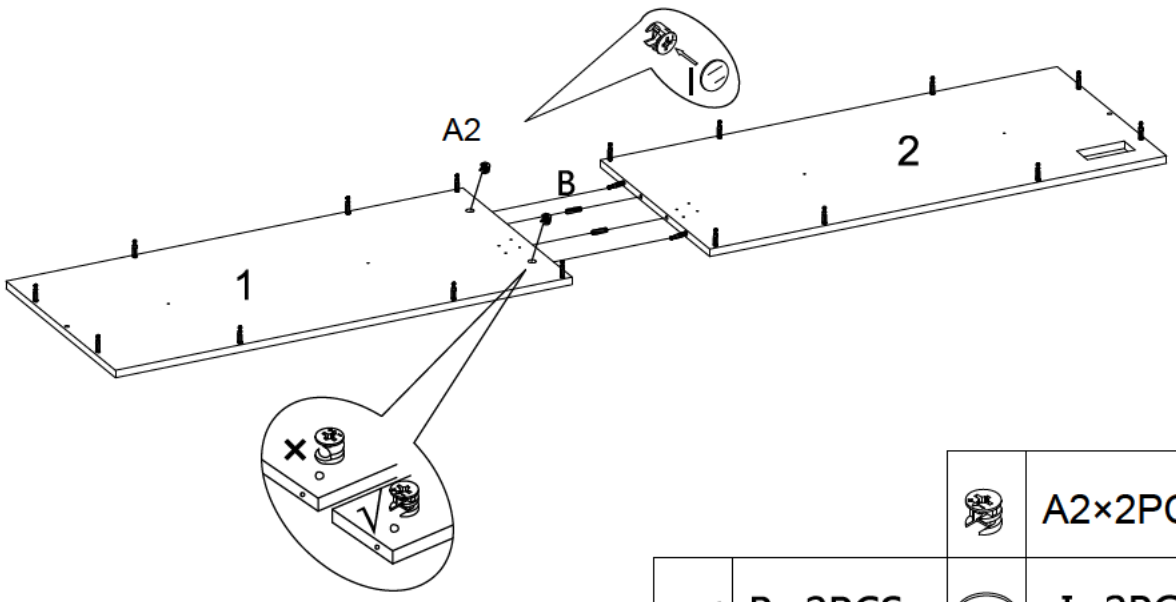

	A2×2PCS
B×2PCS	I×2PCS

STEP 31

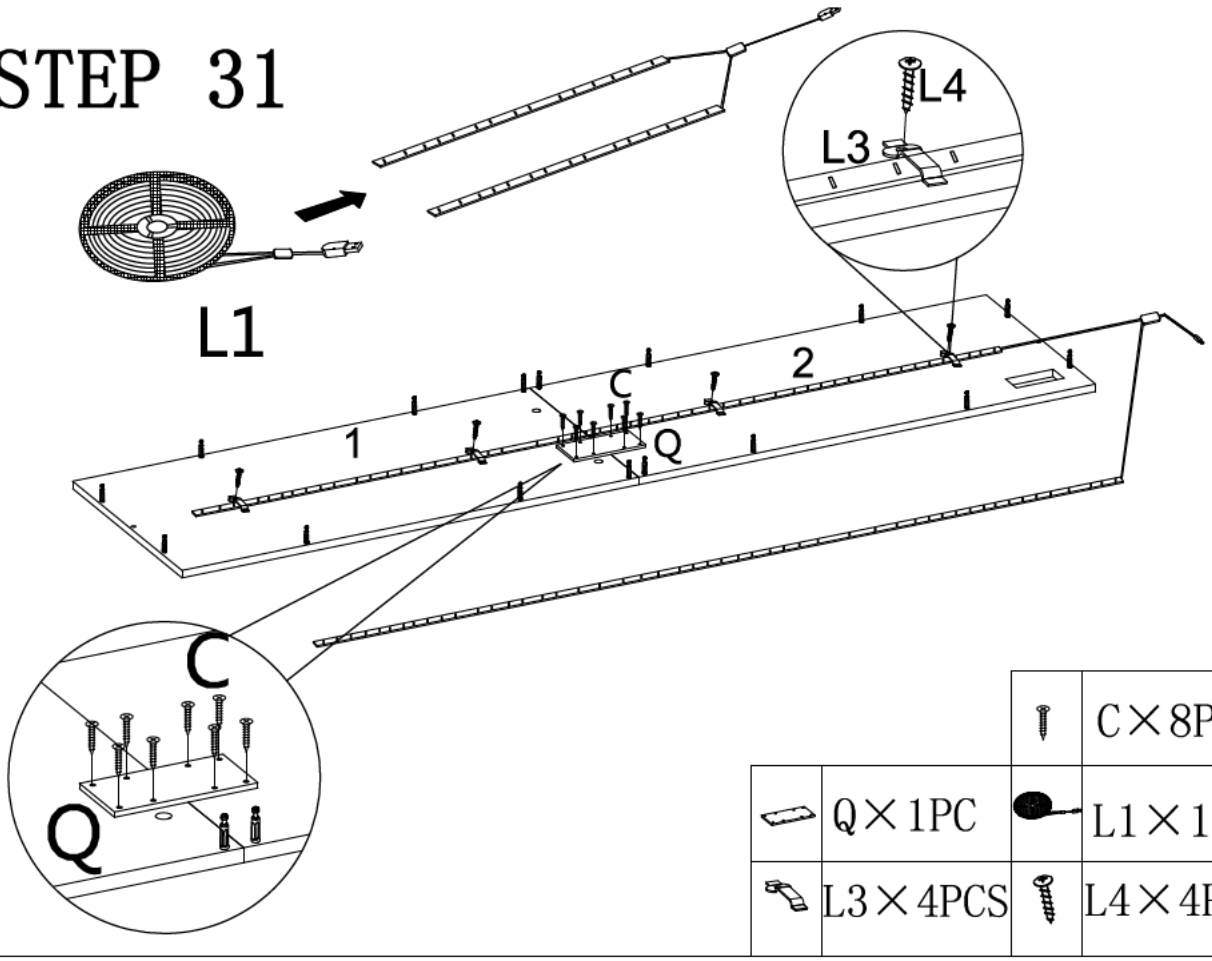

			C×8PCS
	Q×1PC		L1×1PC
	L3×4PCS		L4×4PCS

STEP 32

Please note that at least two people are required to assist in completing the installation

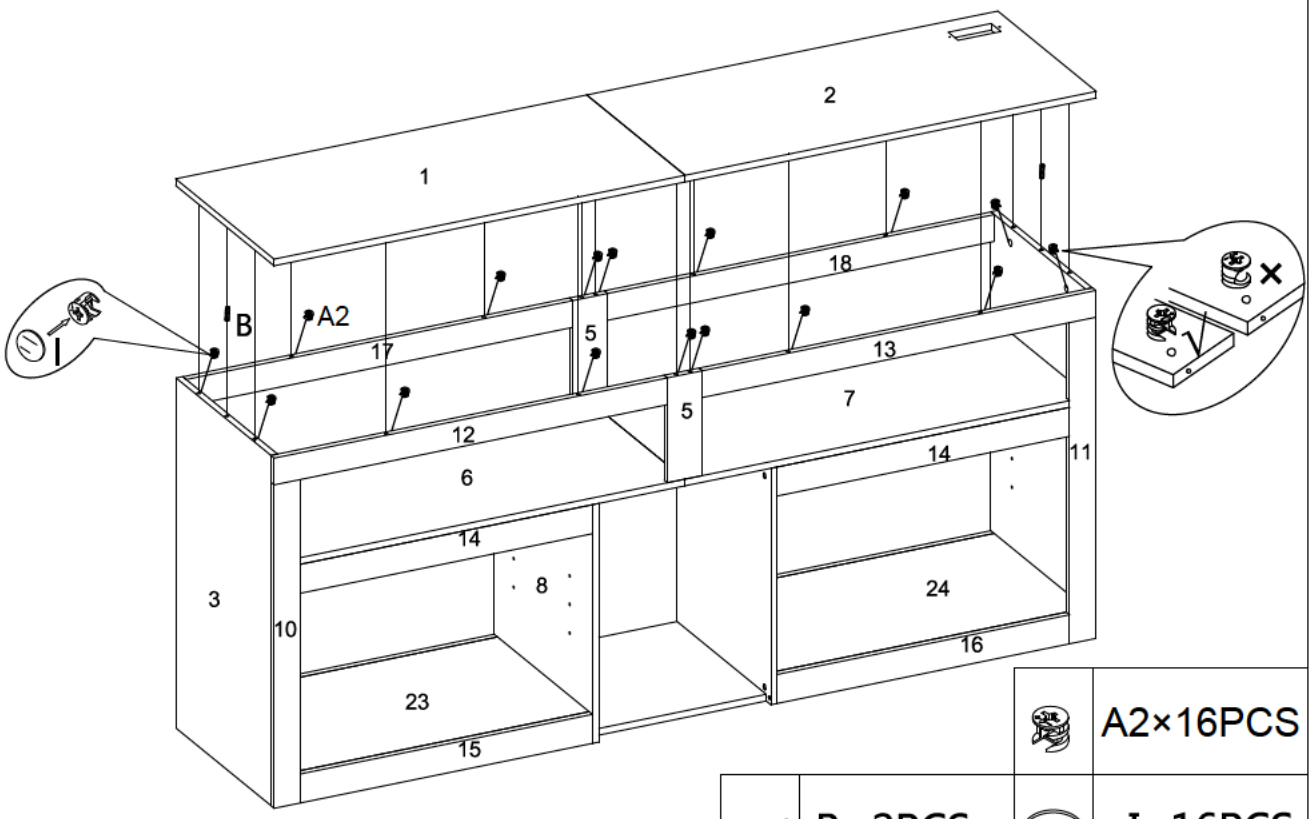

			A2×16PCS
	B×2PCS		I×16PCS

STEP 33

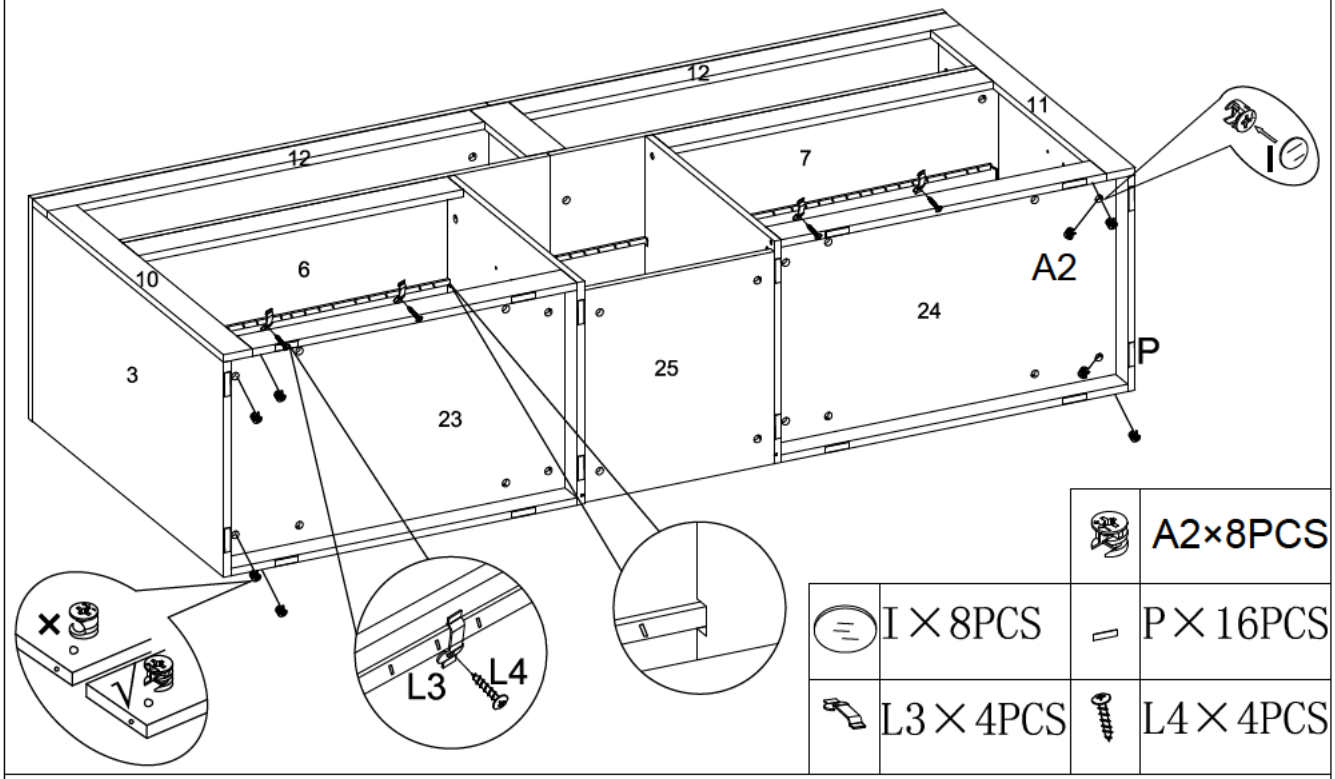

			A2×8PCS
	I×8PCS		P×16PCS
	L3×4PCS		L4×4PCS

STEP 34

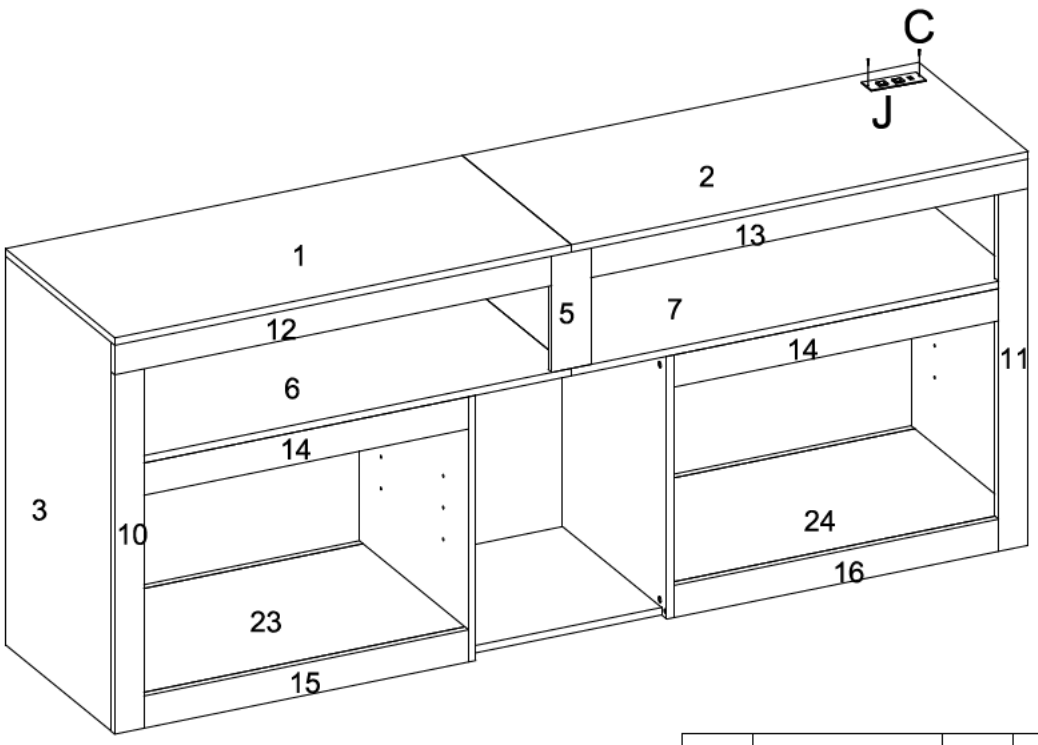

	J×1PC		C×2PCS

STEP 35

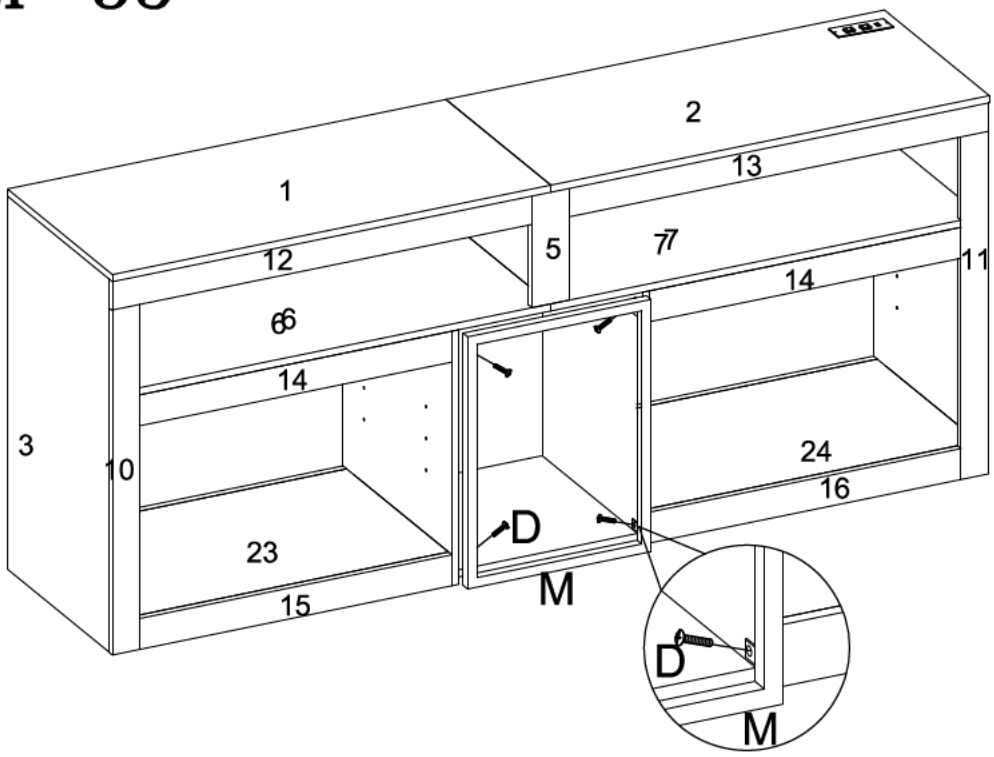

	M×1PC		D×4PCS

STEP 36

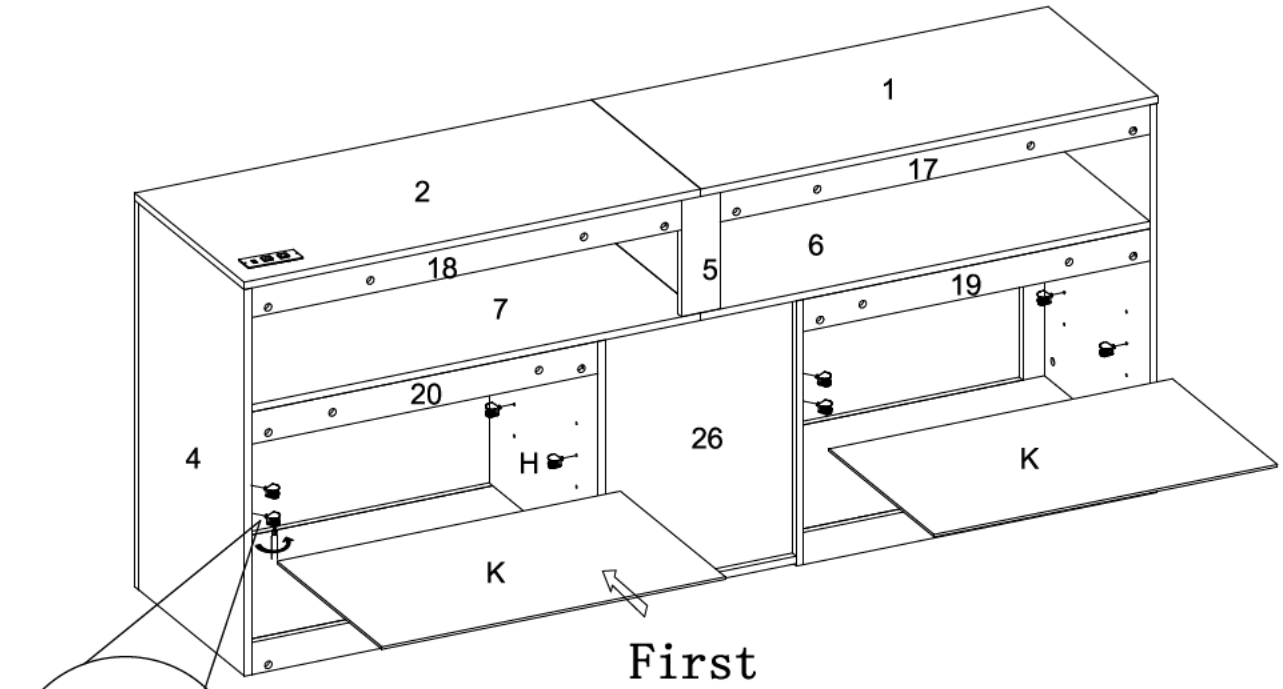

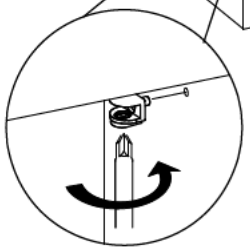

	K×2PCS
	H×8PCS

STEP 37

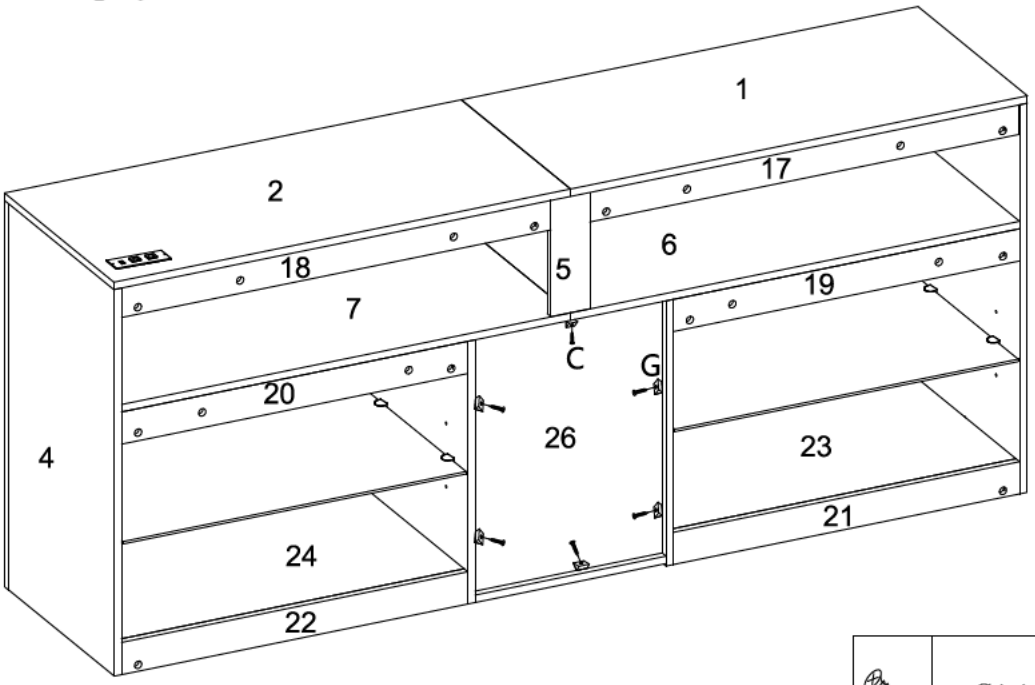

	C×6PCS
	G×6PCS

STEP 38

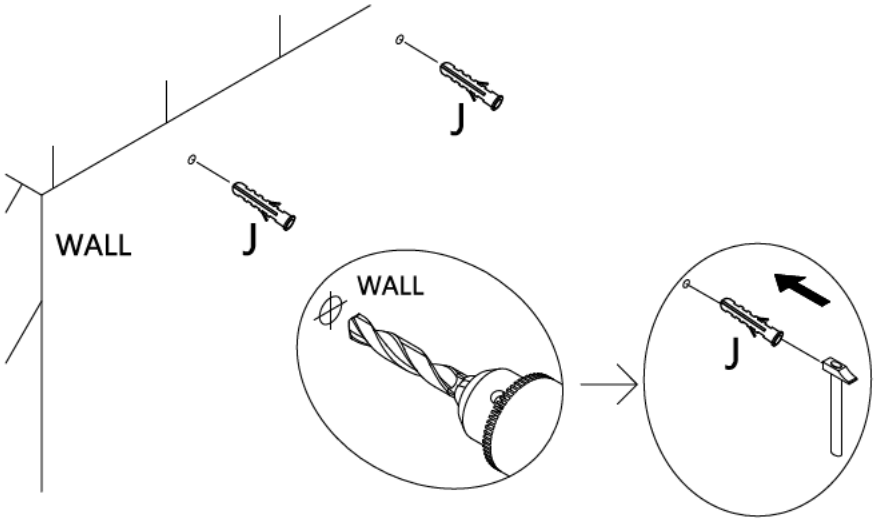

	J×2PCS

STEP 39

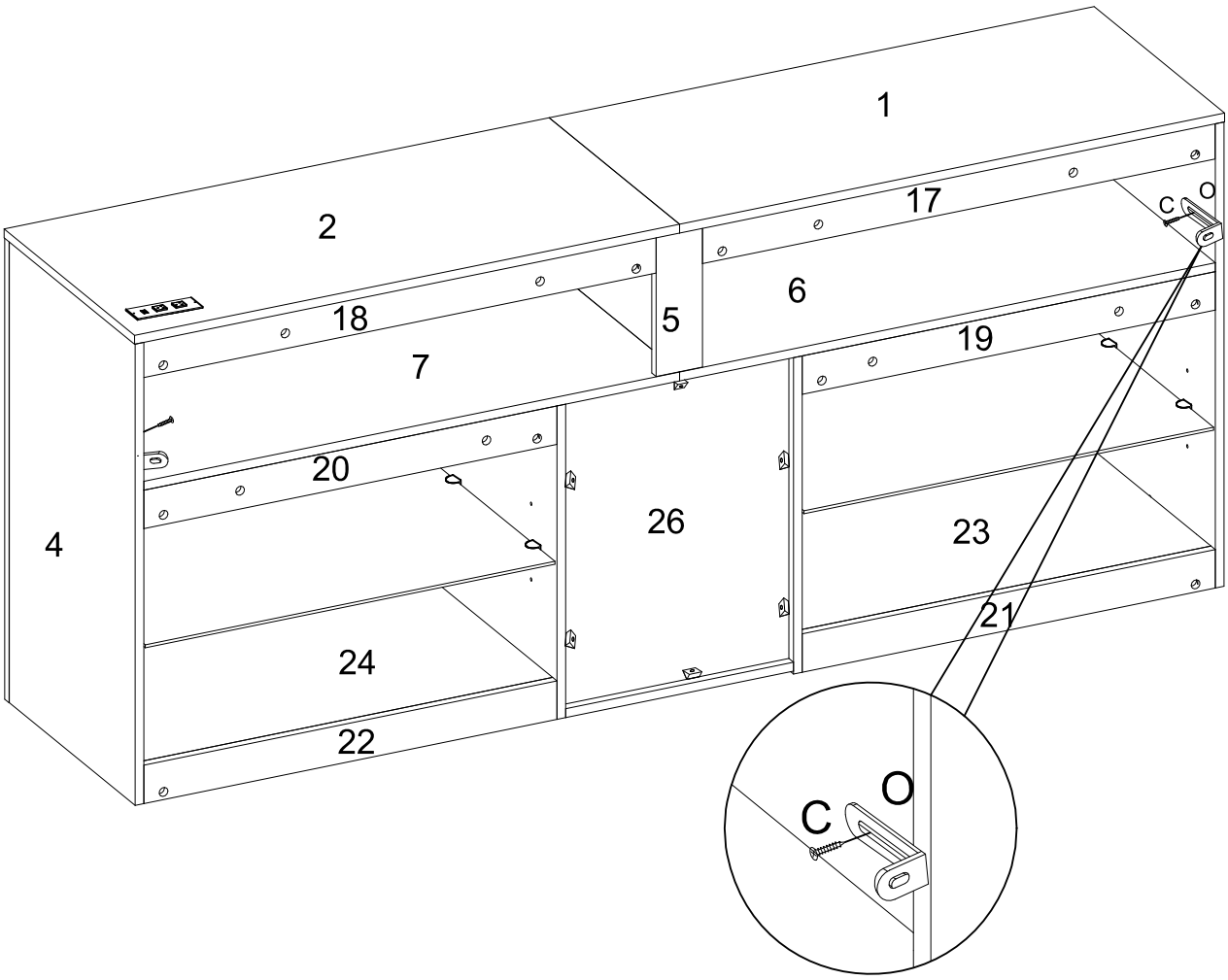

	C×2PCS
	O×2PCS

STEP 40

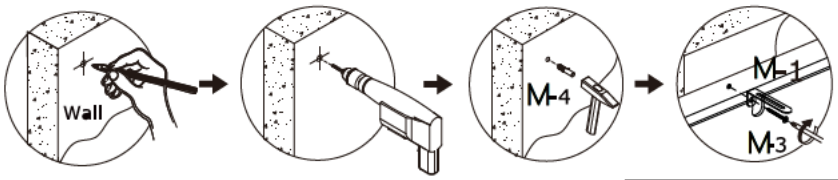

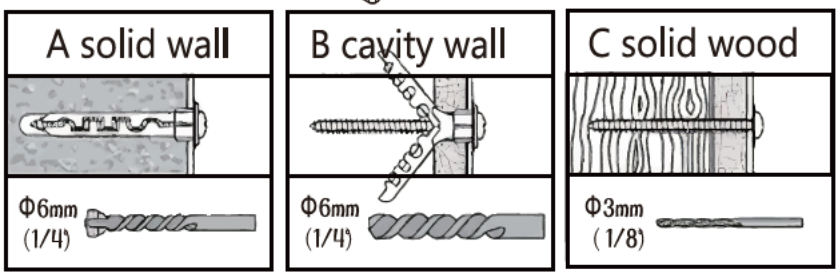

⚠ Warning: If you overturn the furniture, it may cause serious or fatal crushing injuries. We have a wall connection device attached, please use it to hold the furniture following these instructions.

1. Mark the corresponding hole positions where you want to place the furniture;
2. Use a impact drill to drill holes and pay attention to avoid wires and water pipes;
3. Knock the expansion pipes into the wall holes;
4. Place the furniture in the corresponding position and tighten the wall connection device with screws,and Lock the M-2 screw tightly.

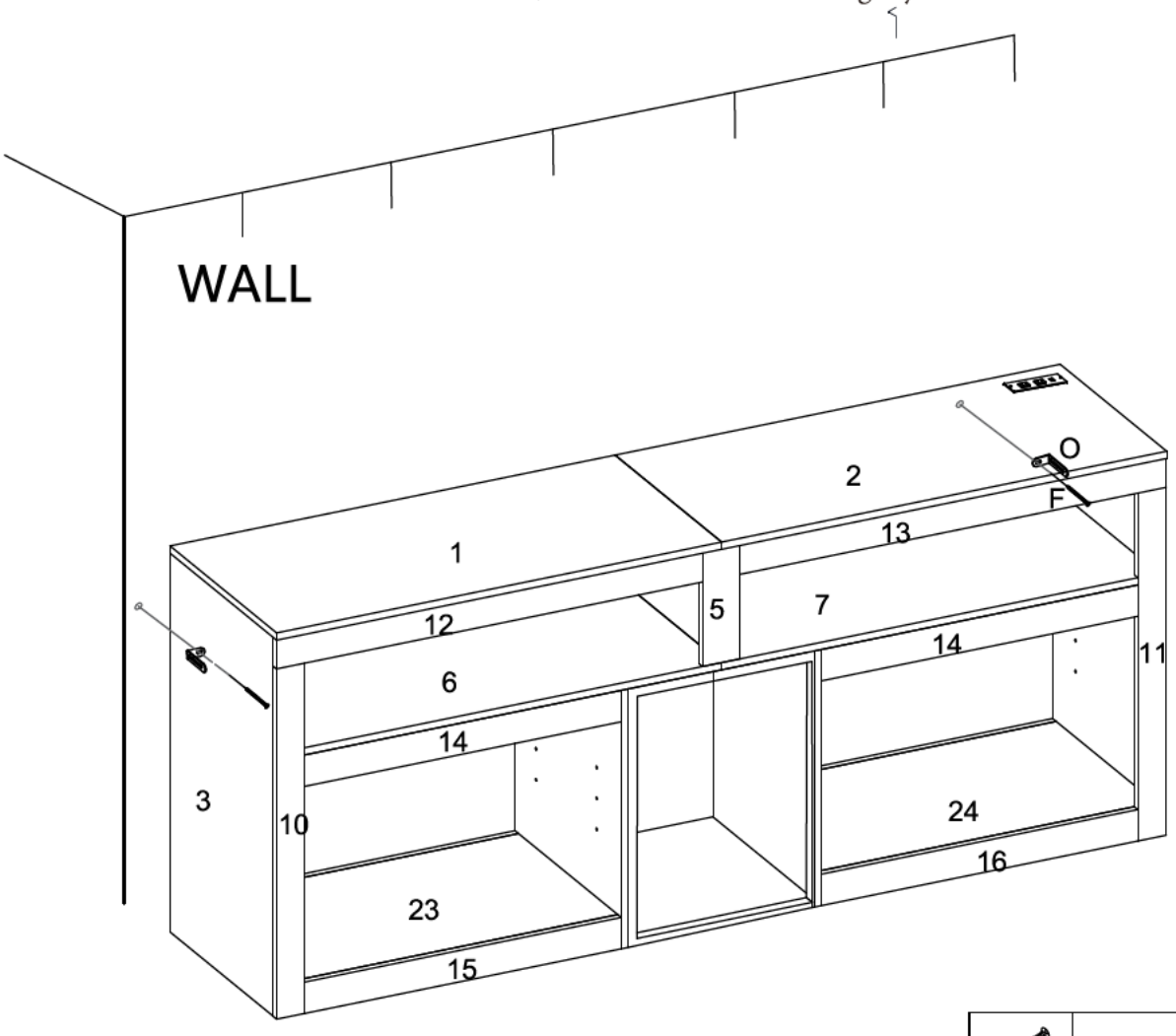

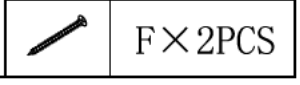

-LED lamp with effective remote control distance of 5 meters

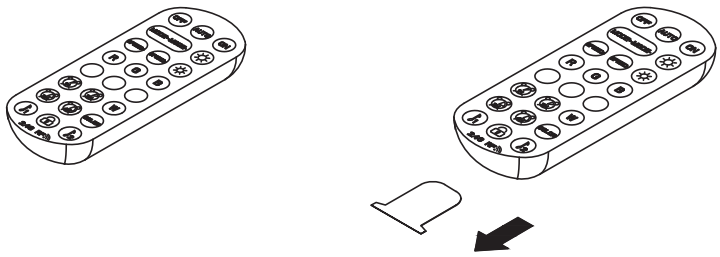

1.Take out the remote control gasket

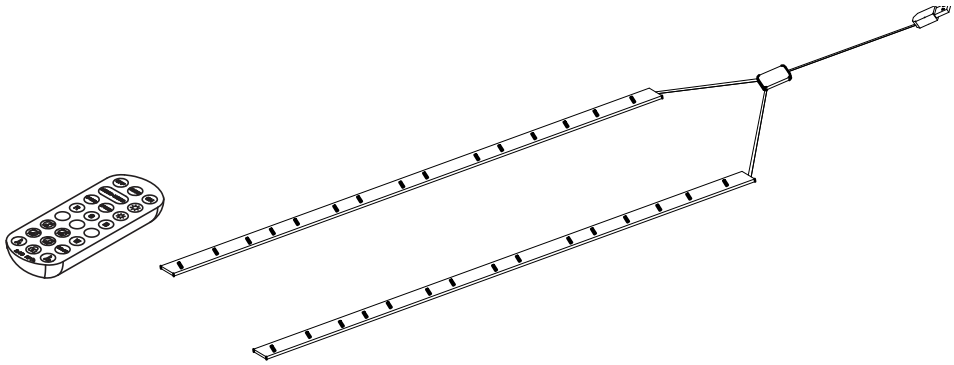

2.Align romote controller to the RGB Control box to adjust the color mode

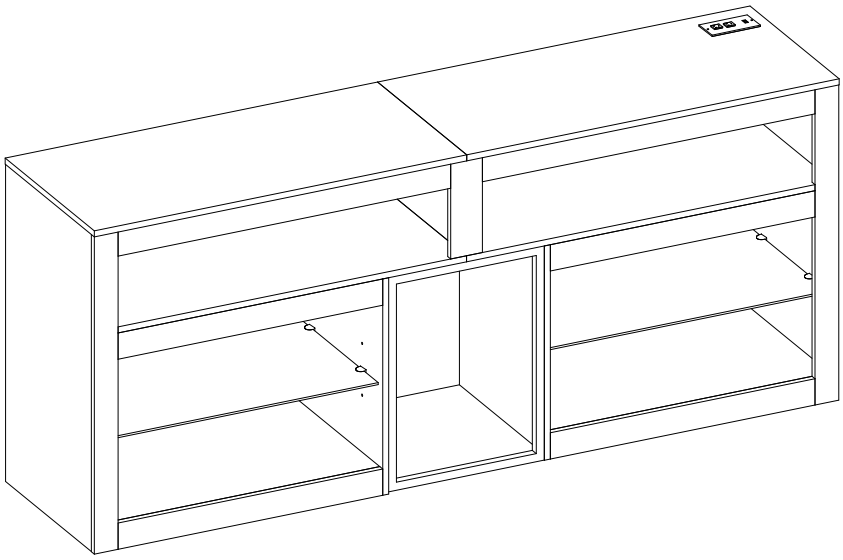

- Installat on comp e e.