Installation & Assembly

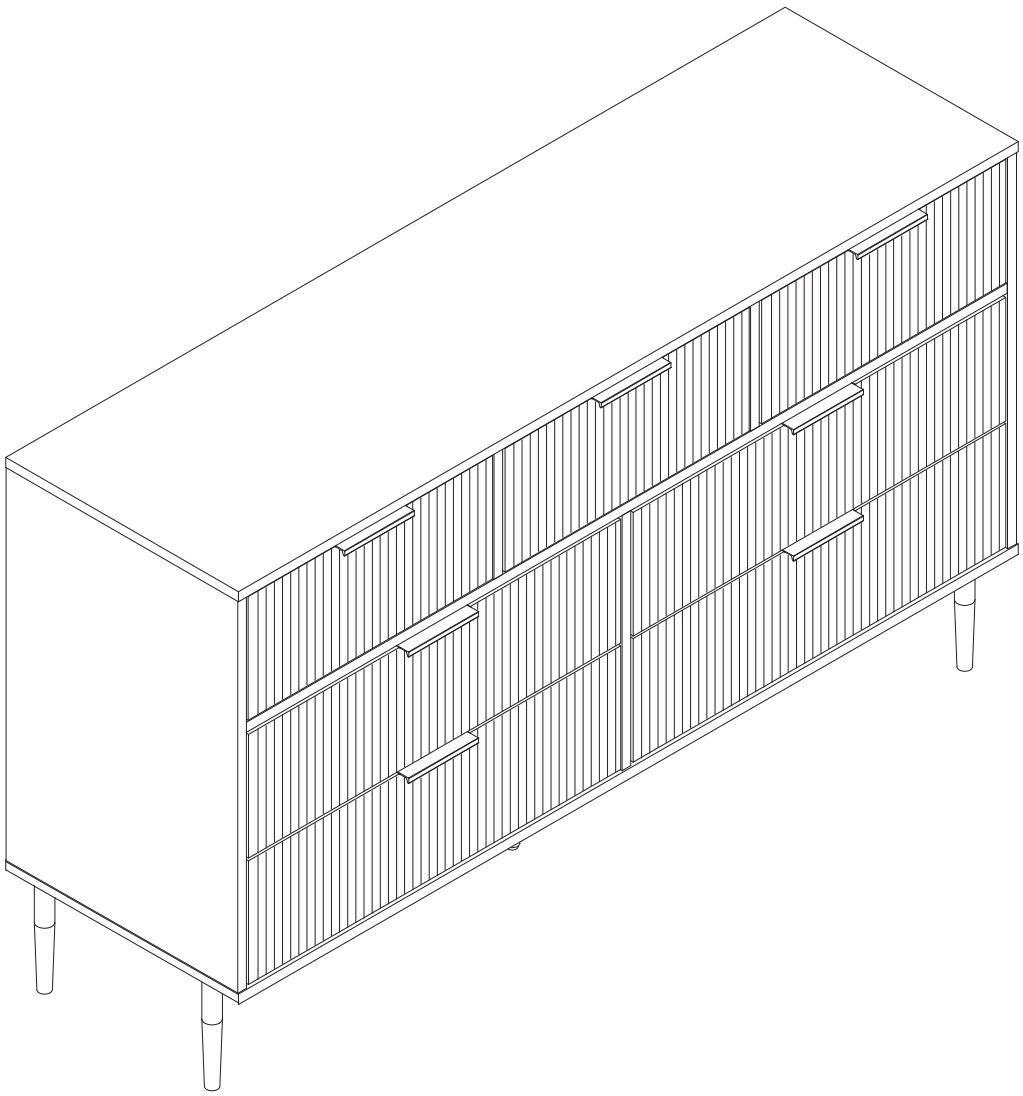

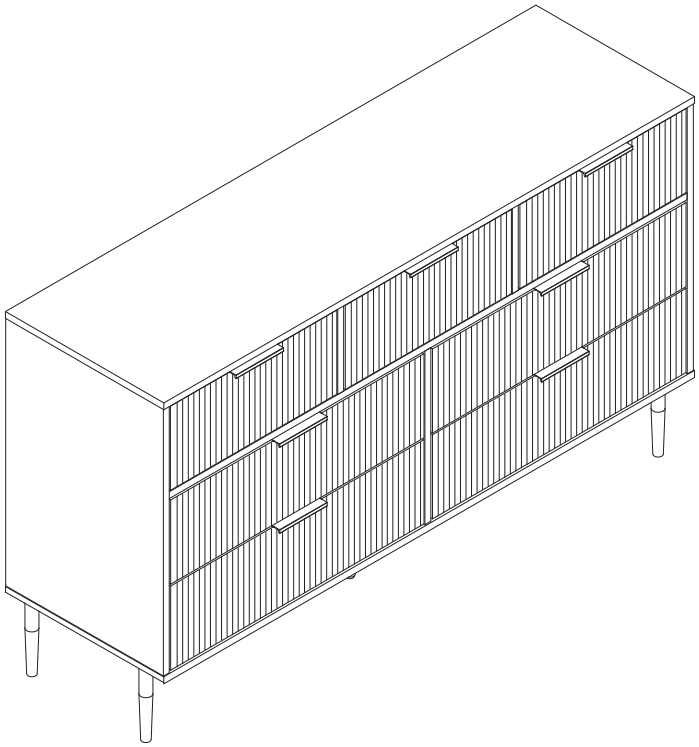

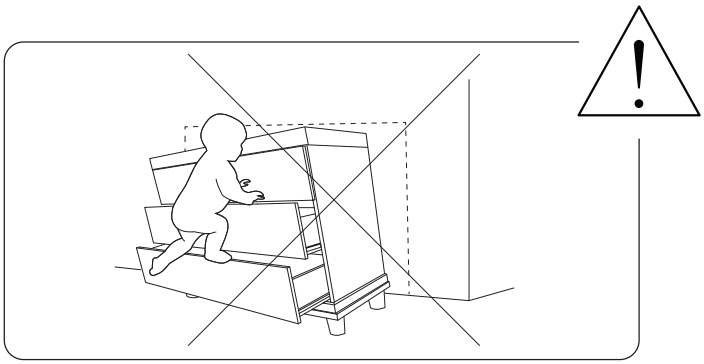

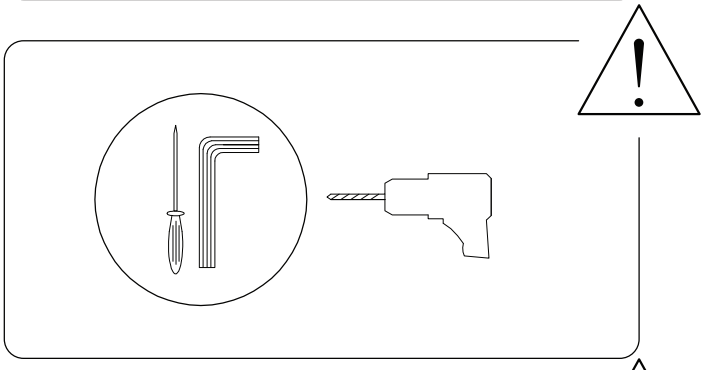

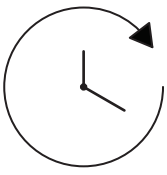

45'

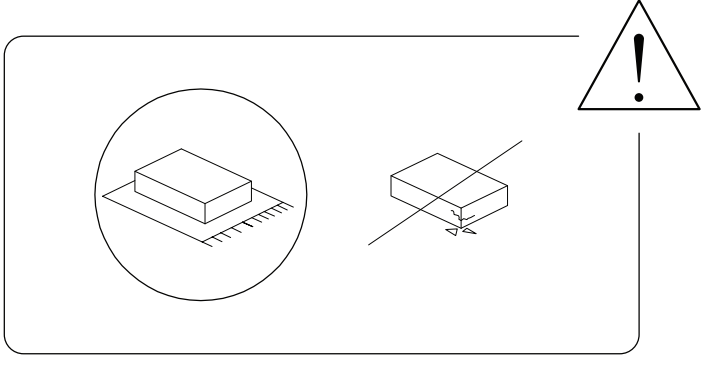

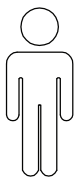

2

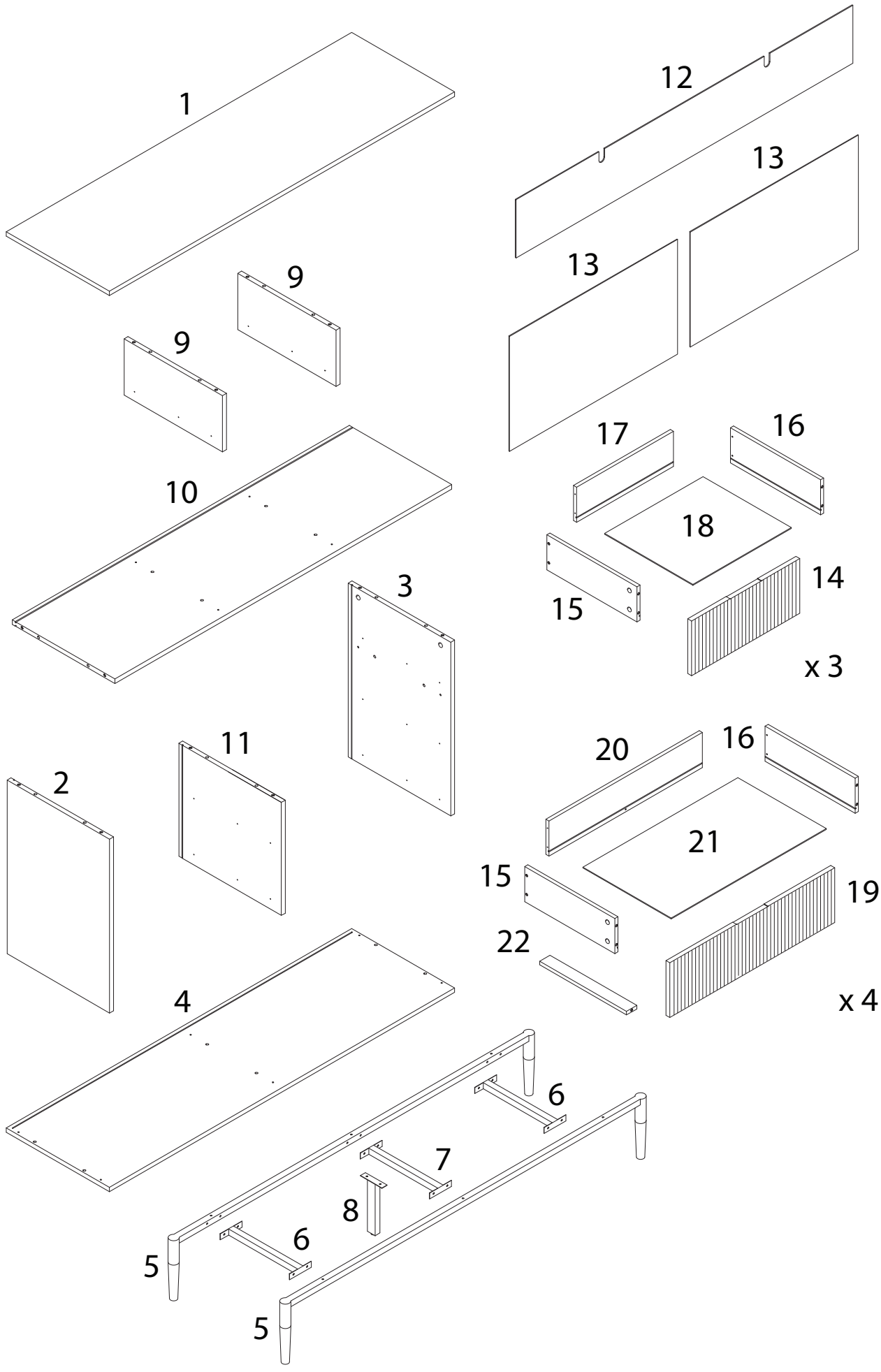
1
12
13
13
9
9
10
17
16
18
15
14
x 3
3
11
2
20
16
21
15
19
22
x 4
4
6
7
8
6
5
5

1	2	3	4
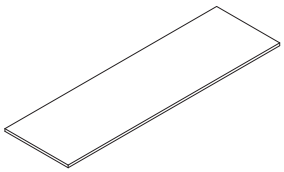	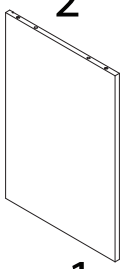	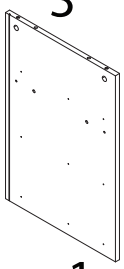	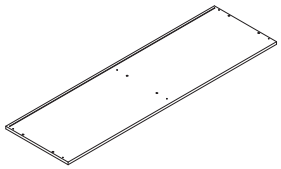
x 1	x 1	x 1	x 1

5	6	7	8
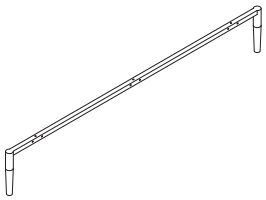	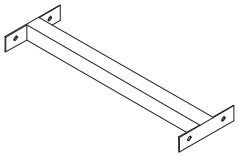	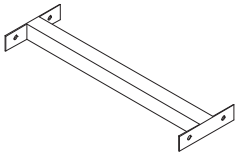	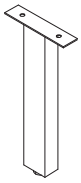
x 2	x 2	x 1	x 1

9	10	11	12
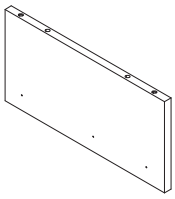	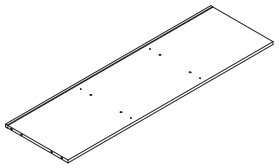	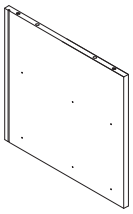	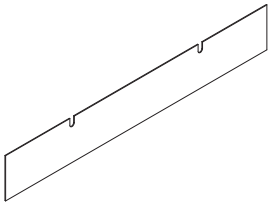
x 2	x 1	x 1	x 1

13	14	15	16	17
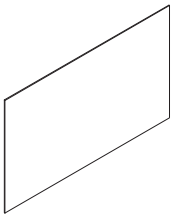	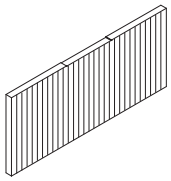	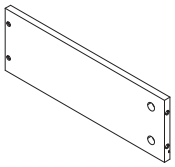	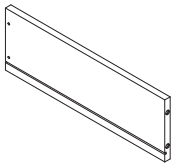	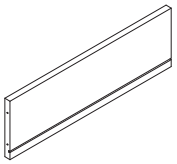
x 2	x 3	x 7	x 7	x 3

18	19	20	21	22
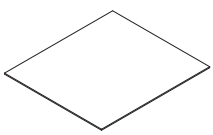	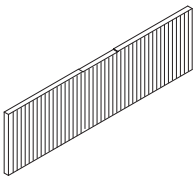	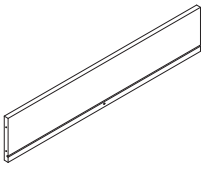	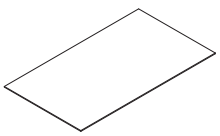	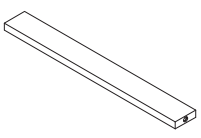
x 3	x 4	x 4	x 4	x 4

A	B	C	CL
	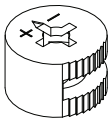	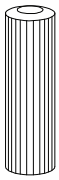	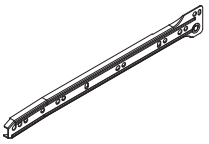
x 46	x 46	x 24	x 7

CR	DL	DR	D
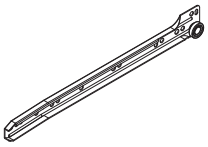	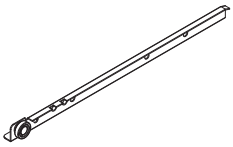	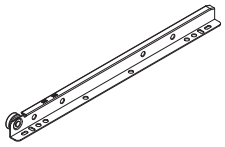	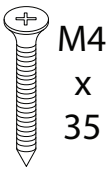 M4 x 35
x 7	x 7	x 7	x 42

E	F	G	H1
 M6 x 12	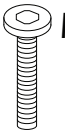 M6 x 30		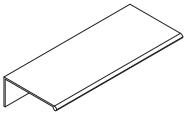
x 14	x 6	x 1	x 7

H2	I1	I2	J
 M3 x 12	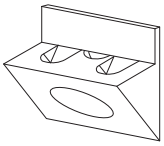	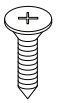 M3 x 14	 M3.5 x 12
x 14	x 10	x 10	x 70

K1	K2	L1	L2
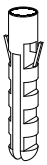	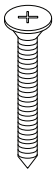 M3.5 x 40	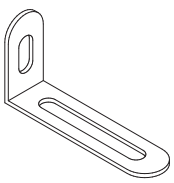	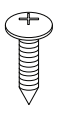 M4 x 12
x 2	x 2	x 2	x 4

1

9	11	CL	CR	J
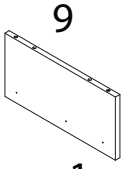	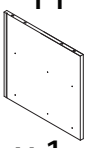		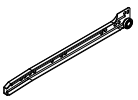	 M3.5 x 12
x 1	x 1	x 3	x 3	x 24

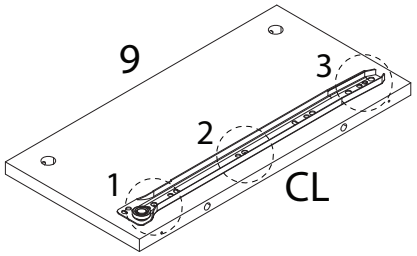

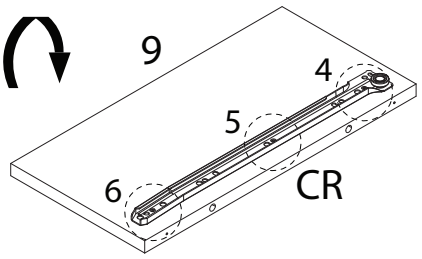

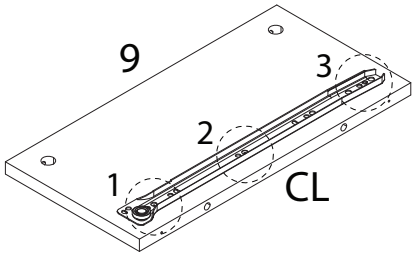

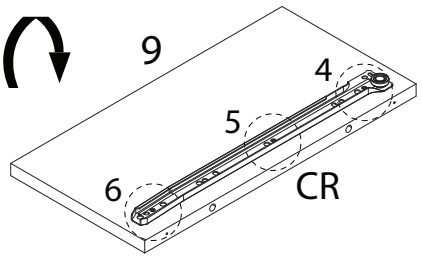

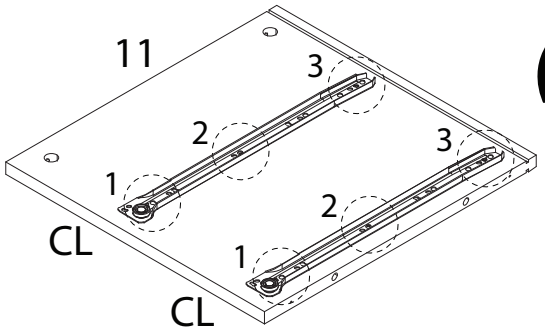

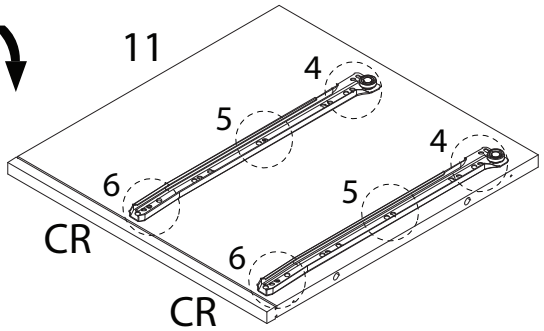

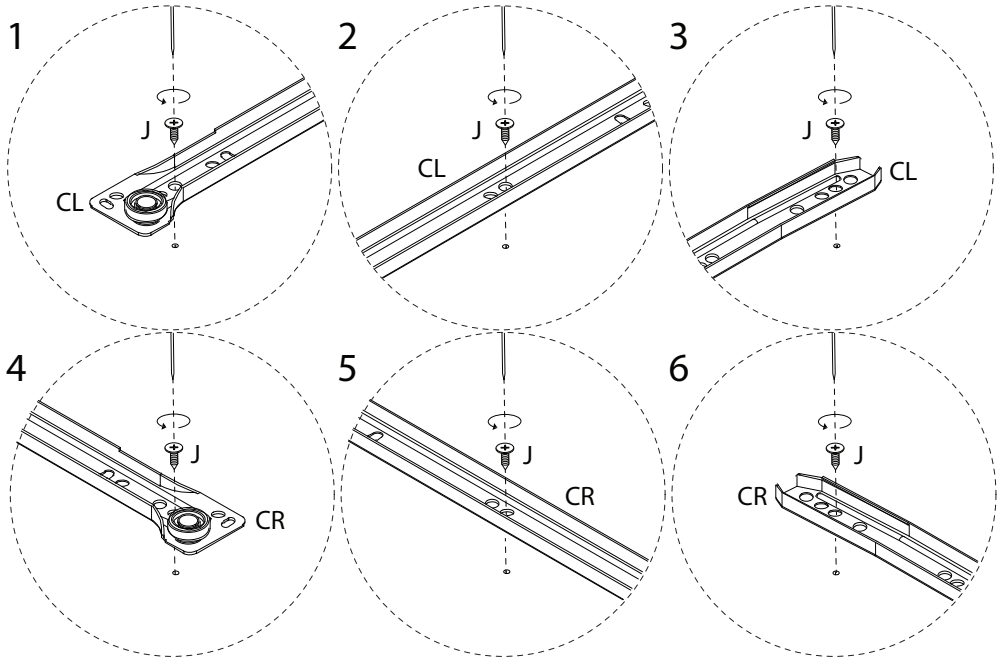

2

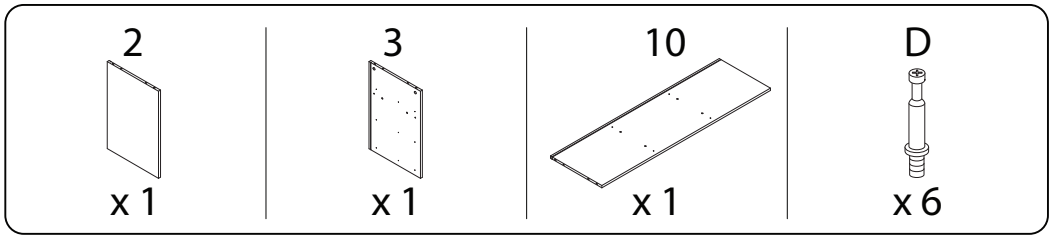

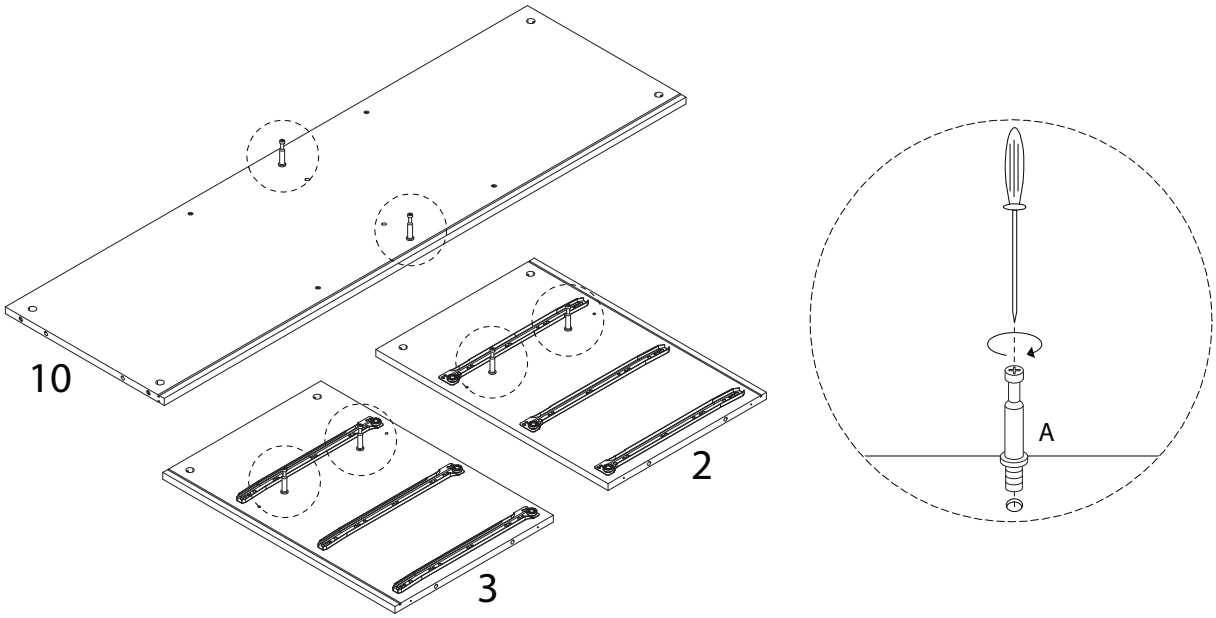

3

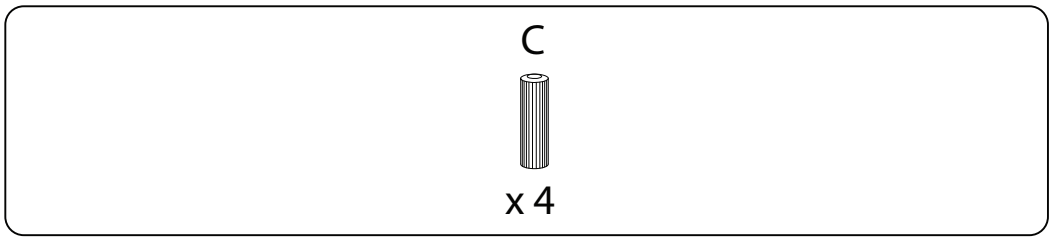

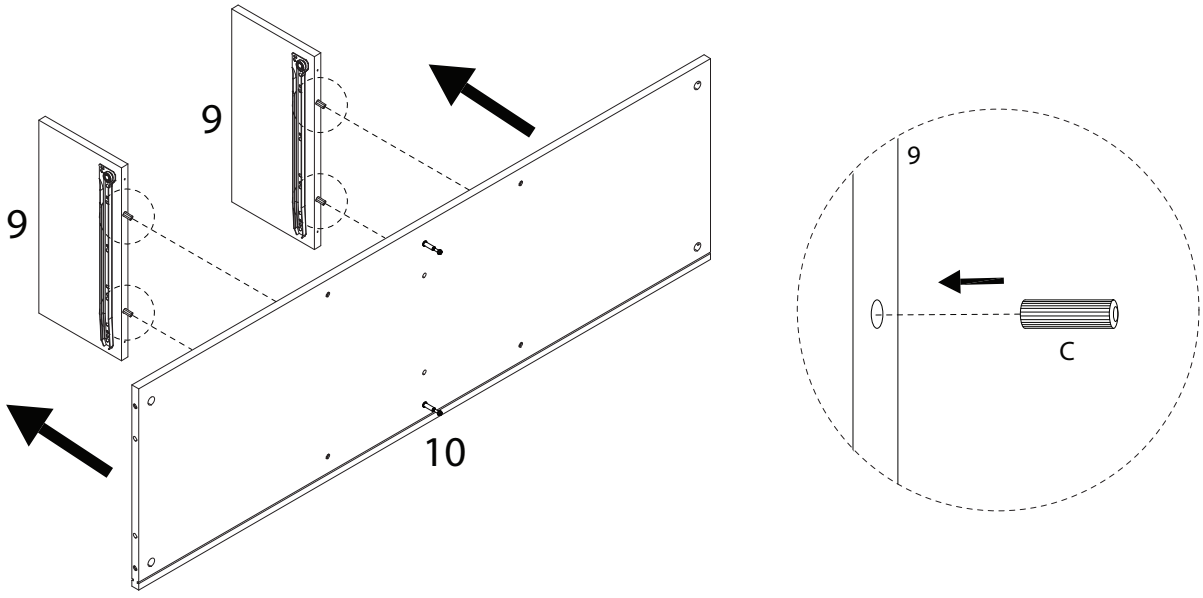

4

D

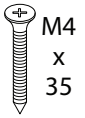

x 4

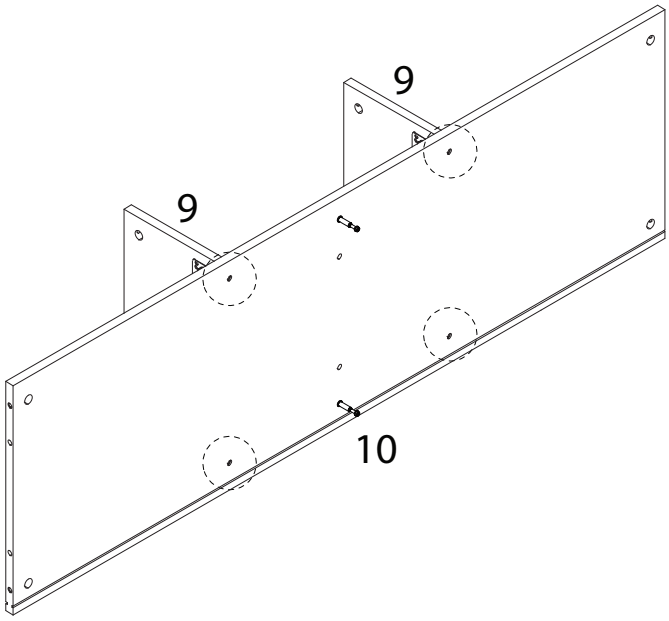

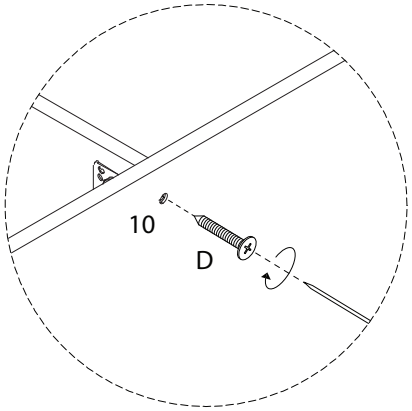

5

C



x 2

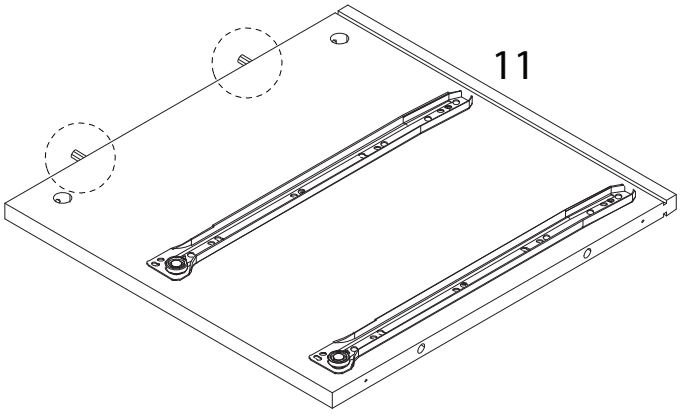

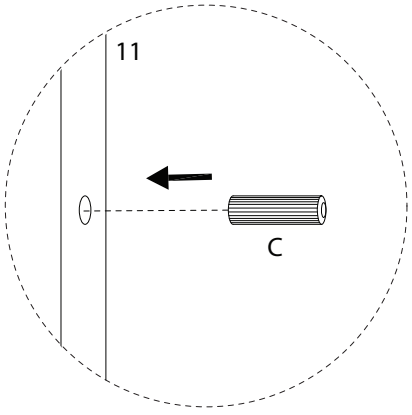

6

B



x 2

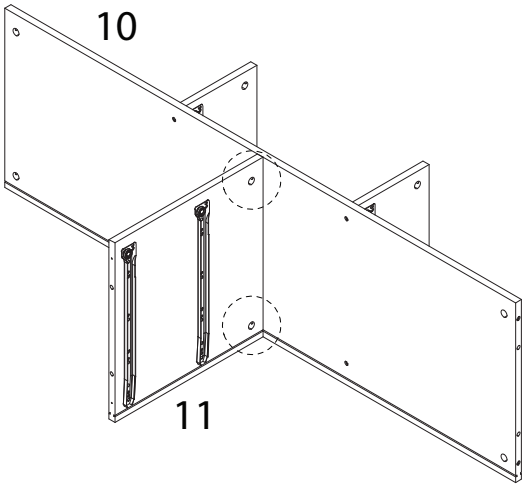

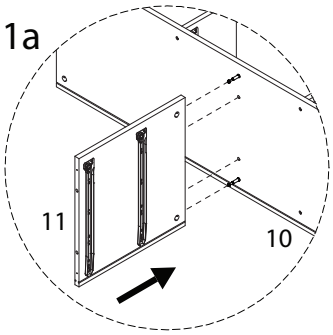

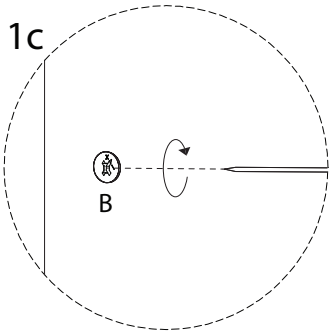

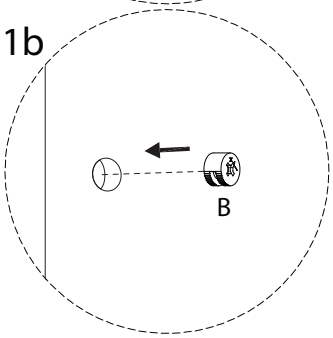

7

CL



x 3

CR

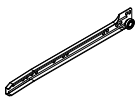

x 3

J

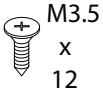

x 18

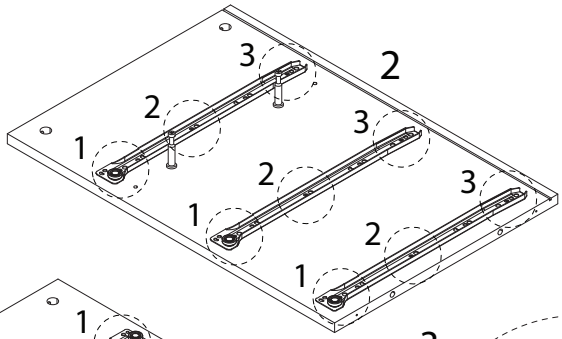

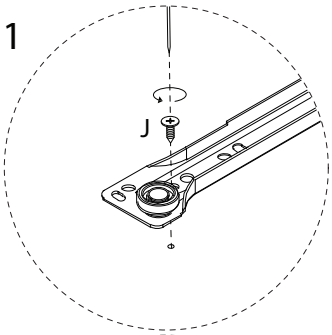

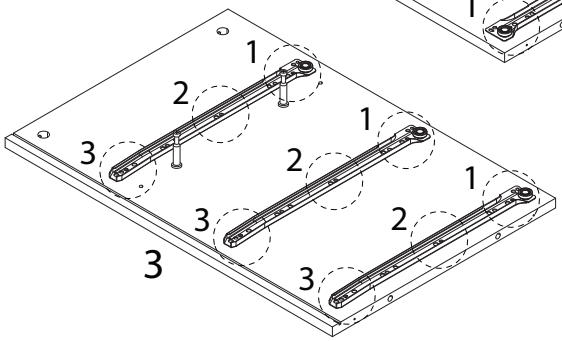

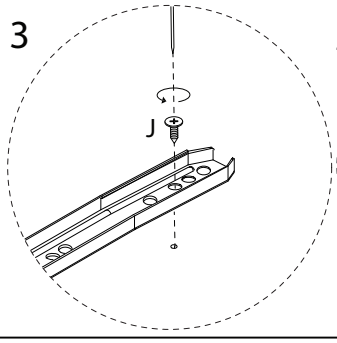

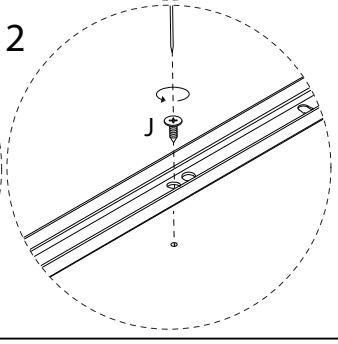

8

C



x 4

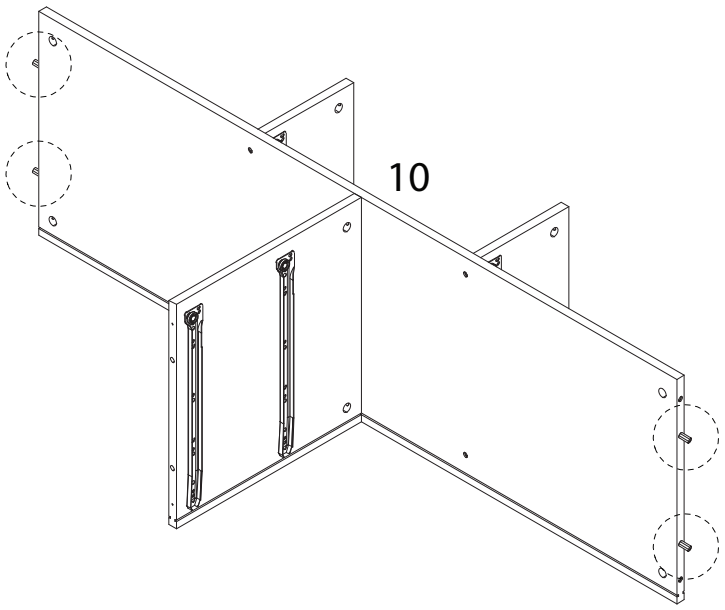

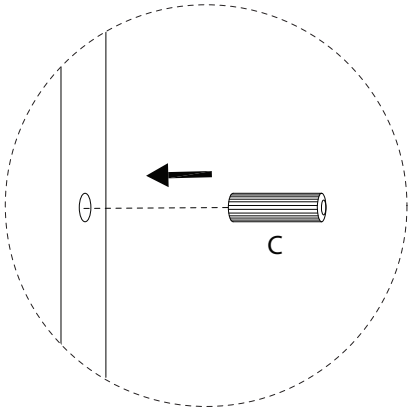

9

B



x 2

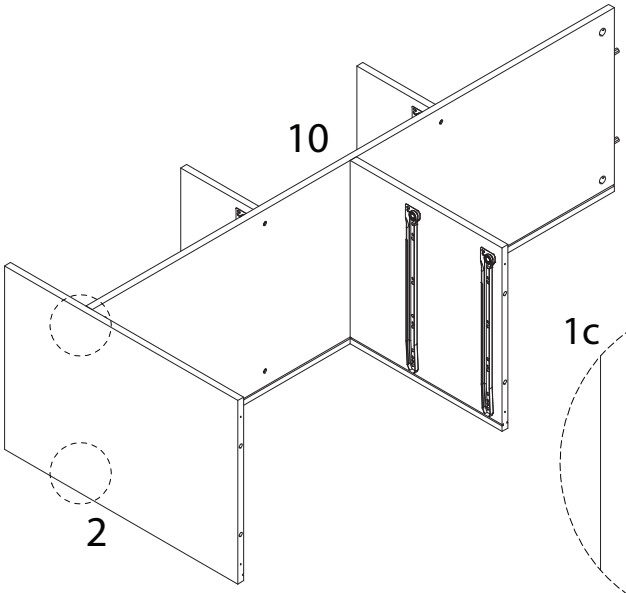

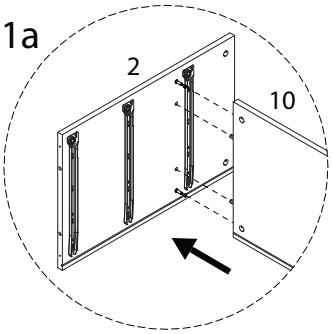

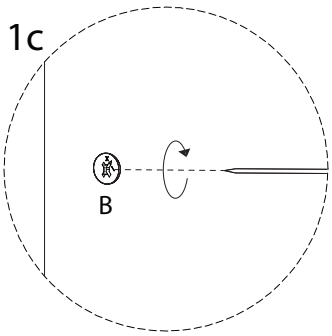

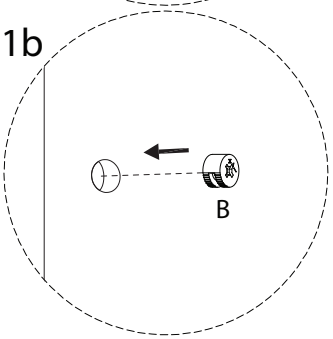

10

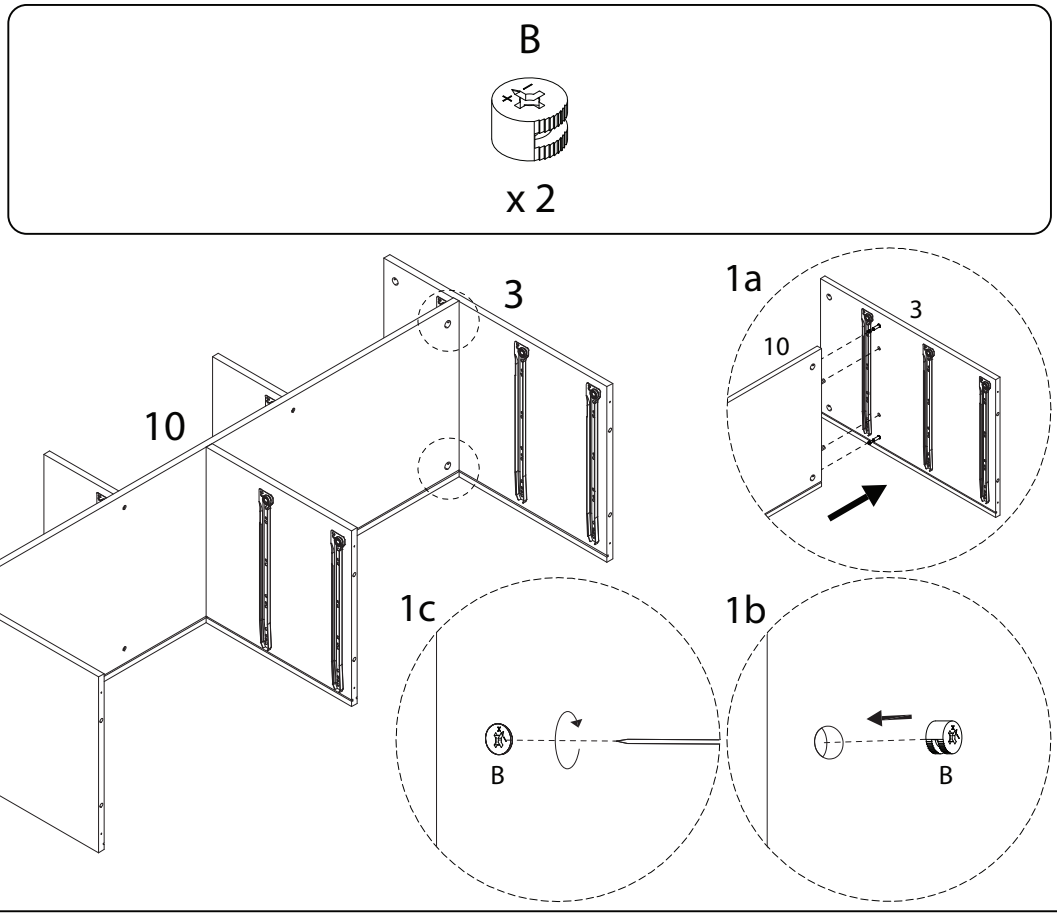

11

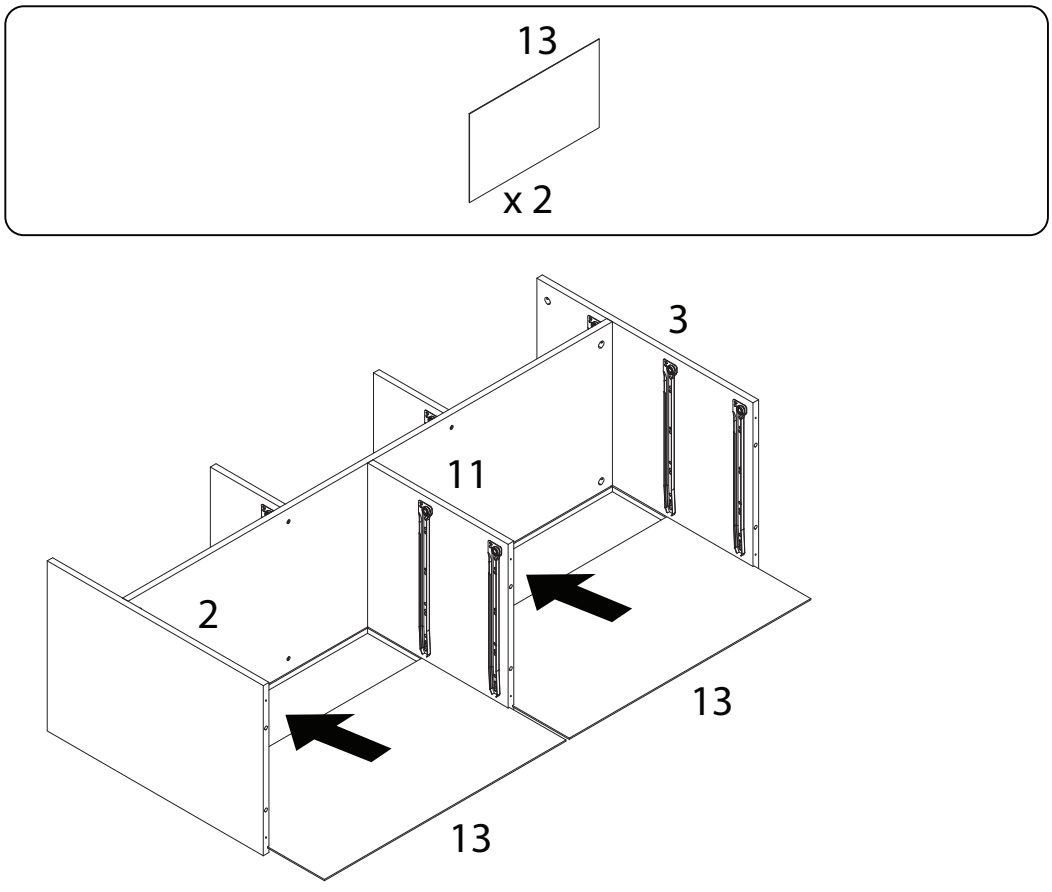

12

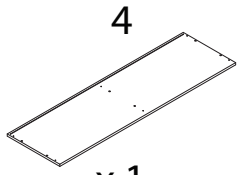



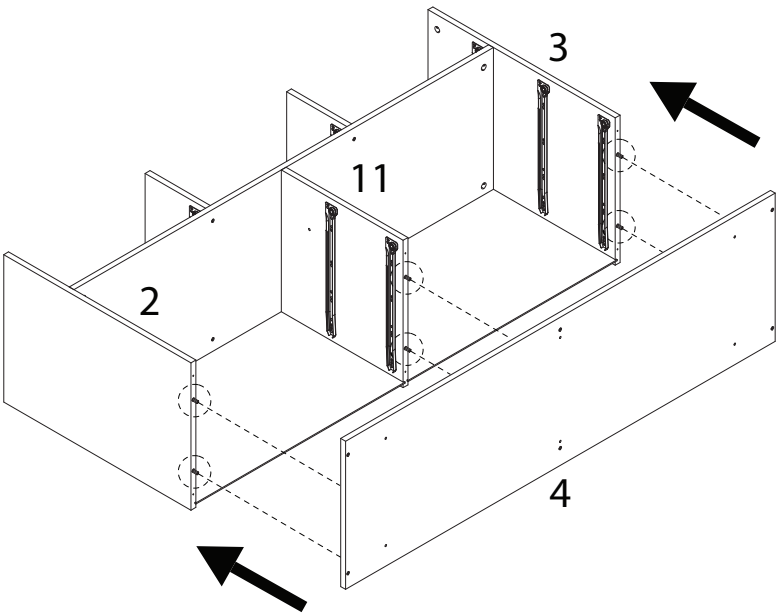

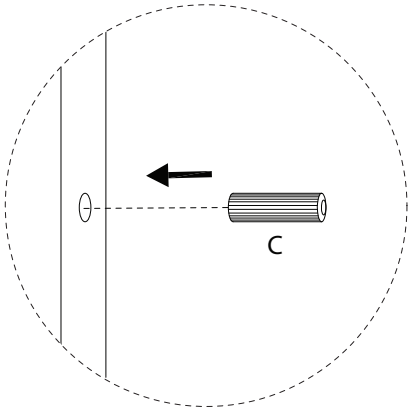

13

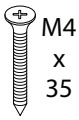

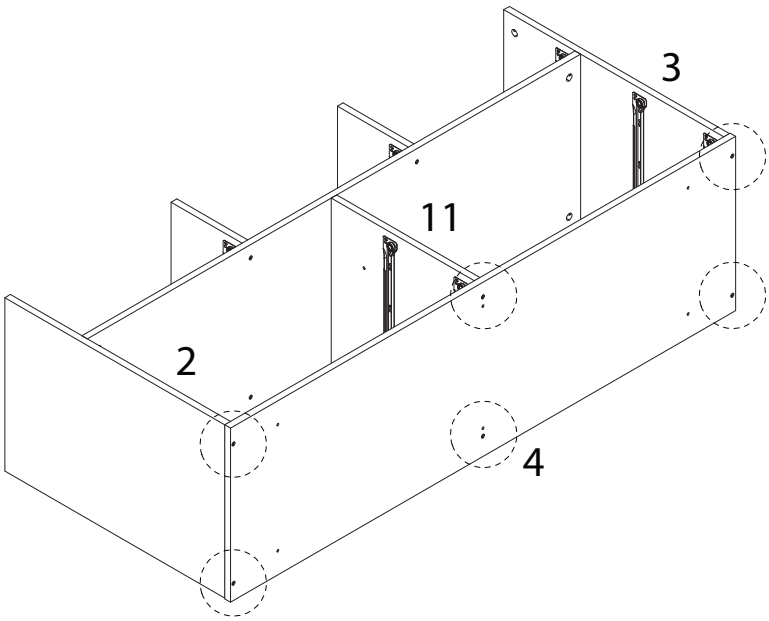

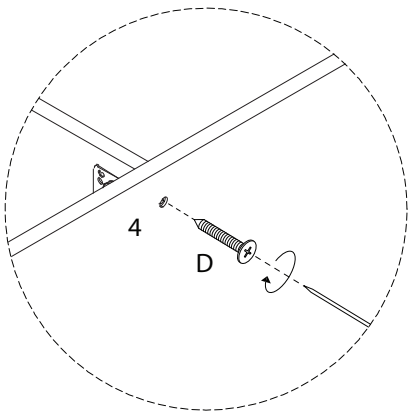

14

5	6	7	8	E	G
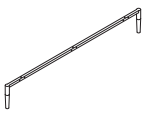	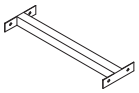	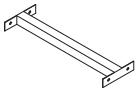			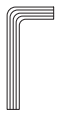
x 2	x 2	x 1	x 1	x 14	x 1

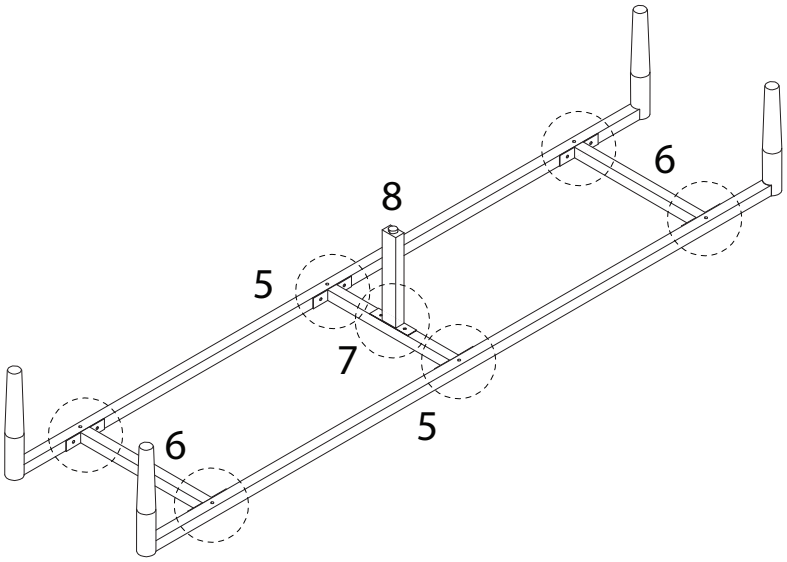

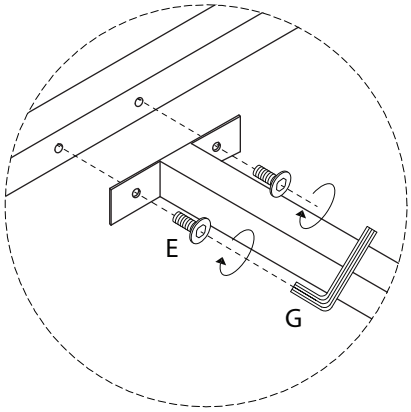

15

F	G
	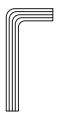
x 6	x 1

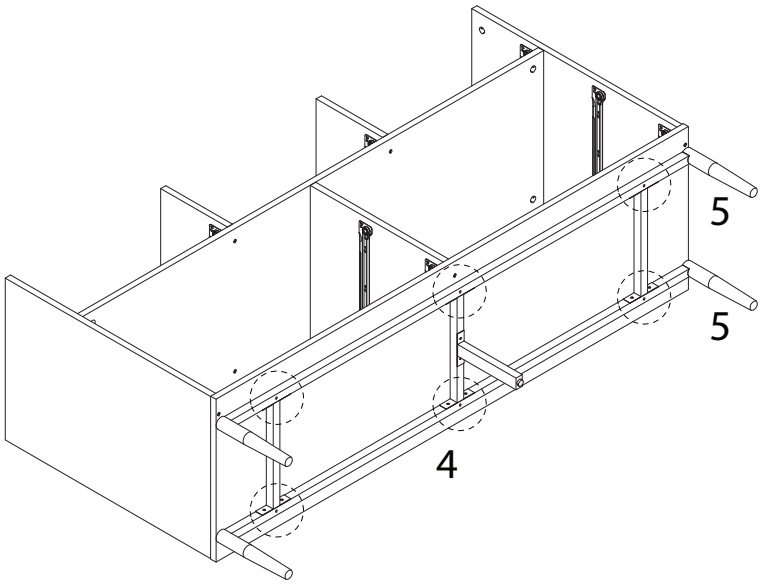

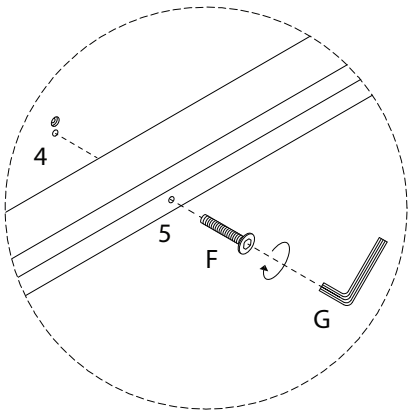

16

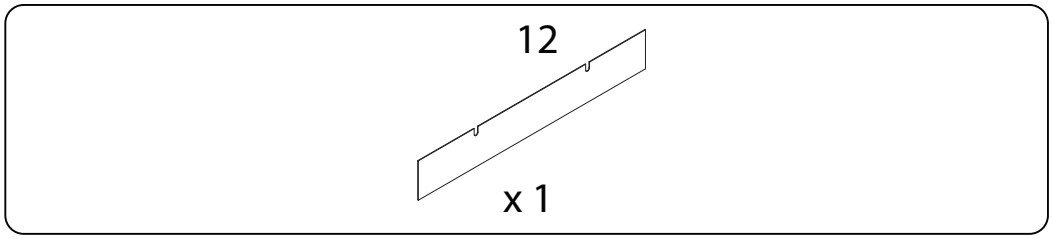

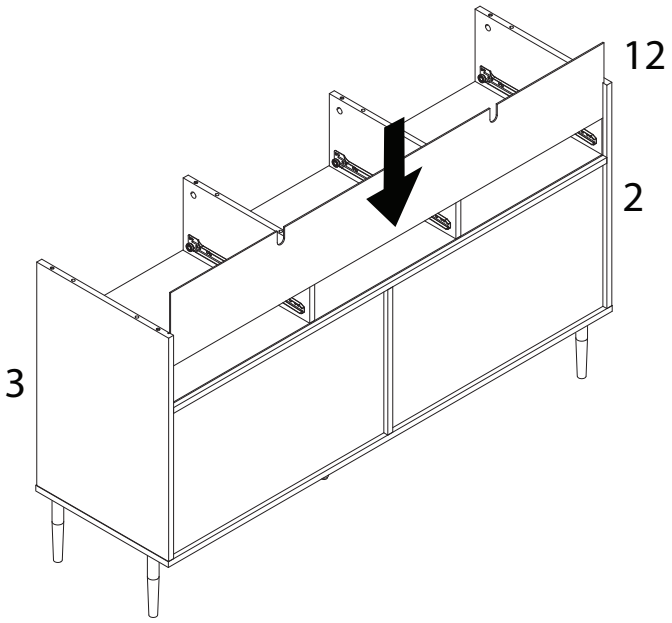

17

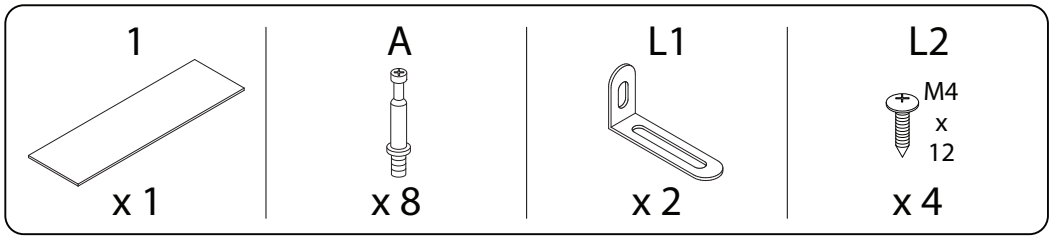

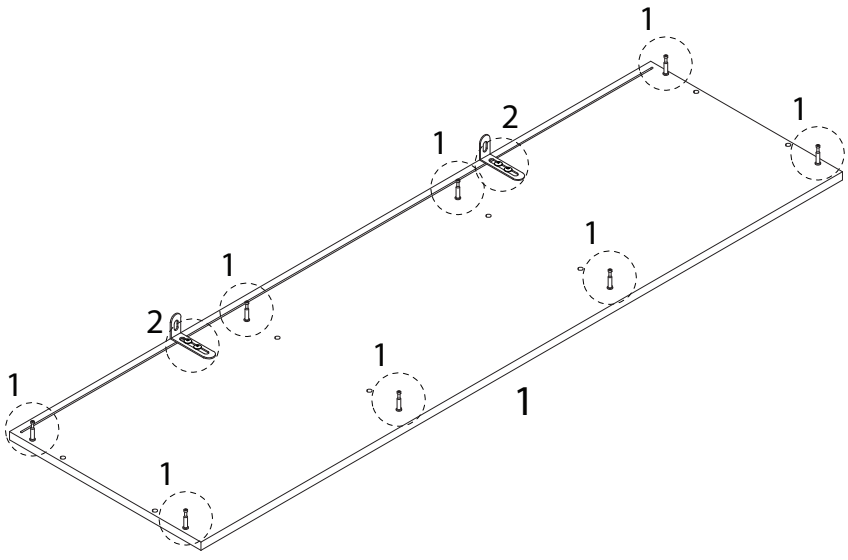

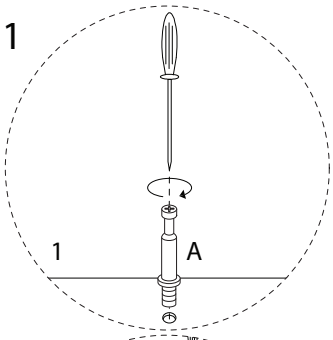

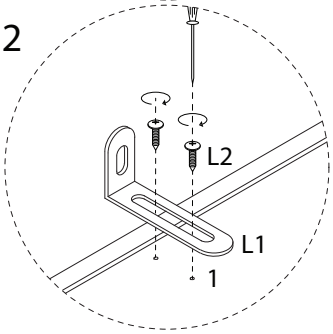

18

C

x 8

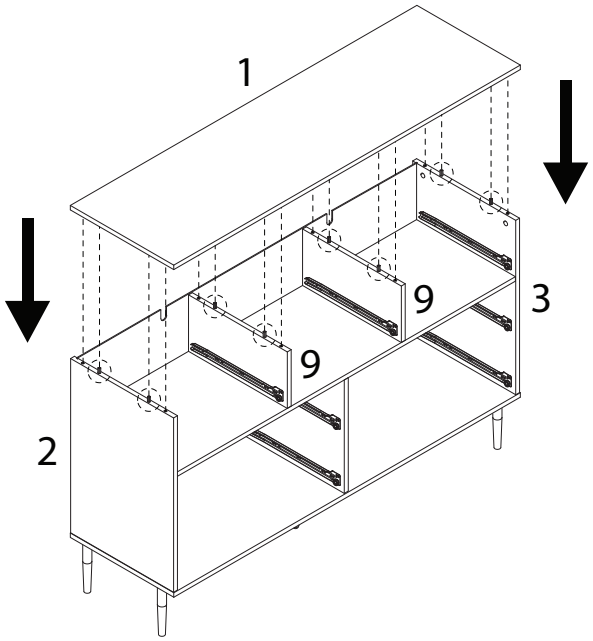

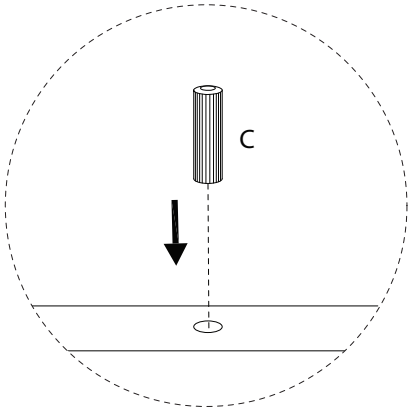

19

B



x 8

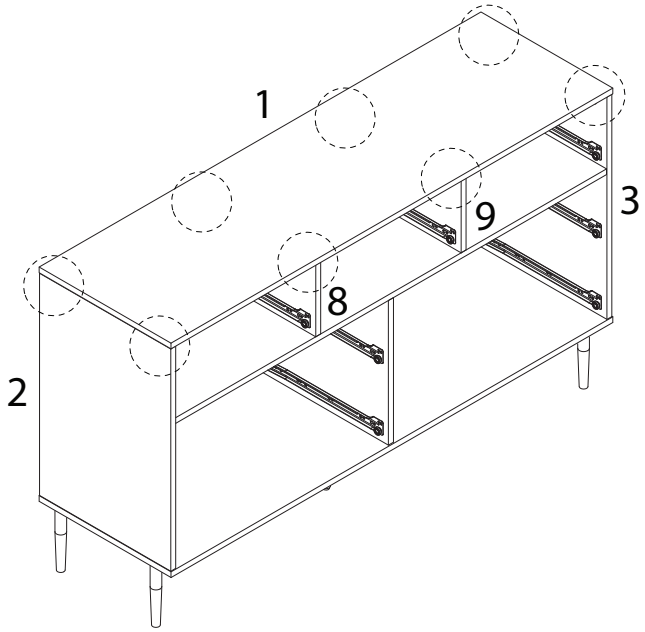

1a

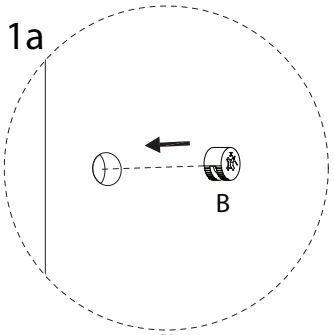

1b

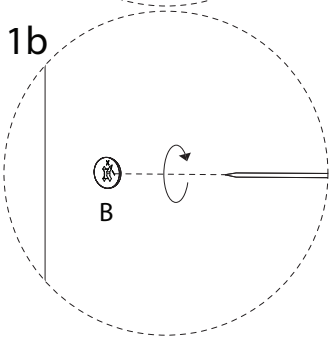

20

I1	I2
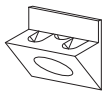	
x 10	x 10

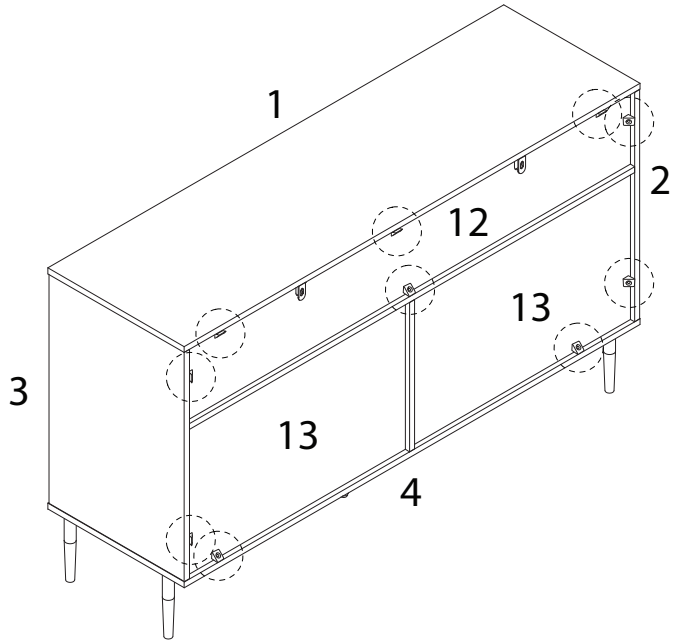

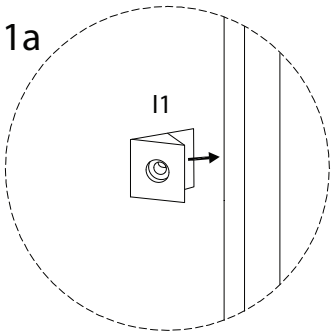

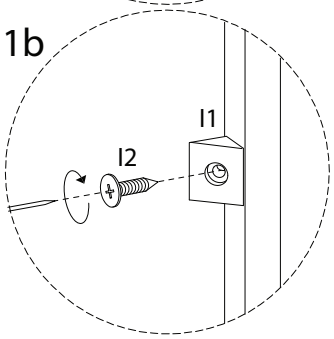

21

K1	K2
	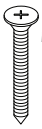
x 2	x 2

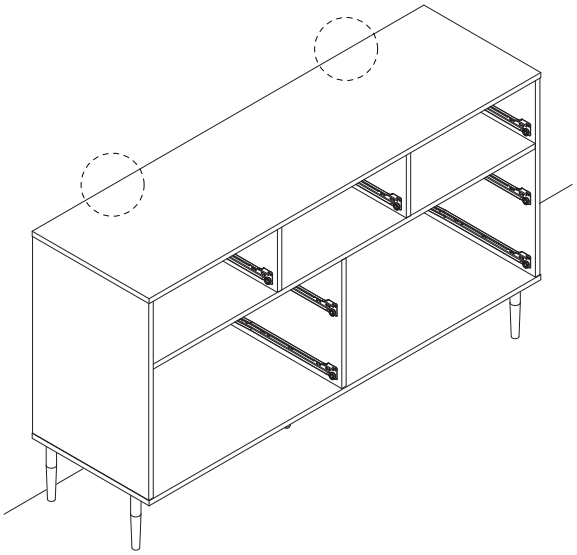

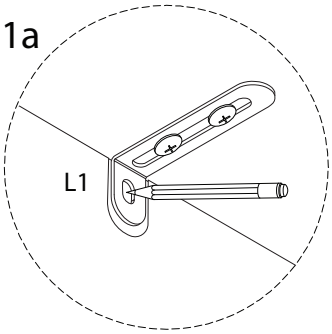

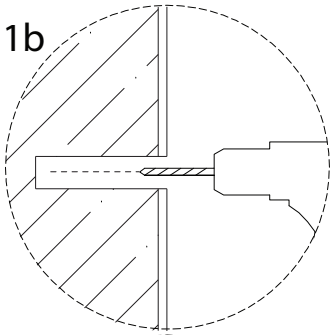

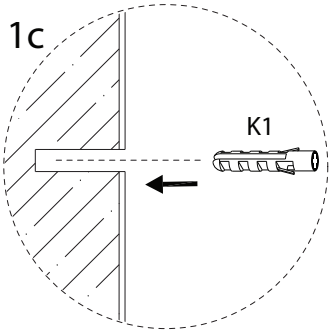

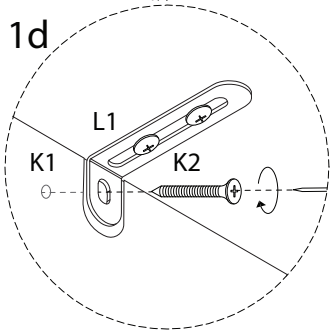

22 x 3

14	A	H1	H2
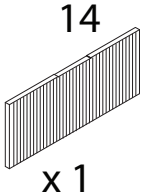	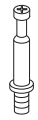	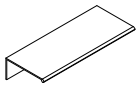	 M3 x 12
x 1	x 4	x 1	x 2

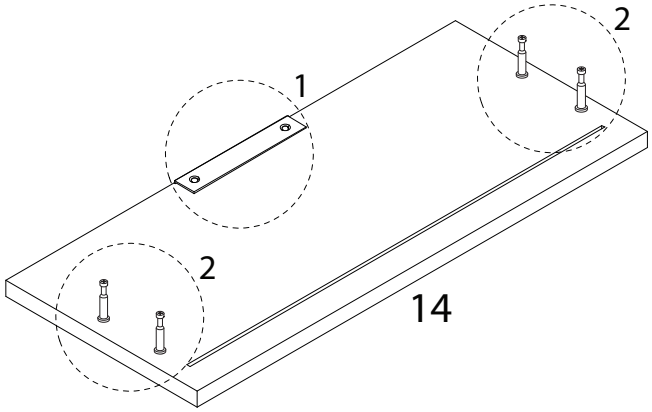

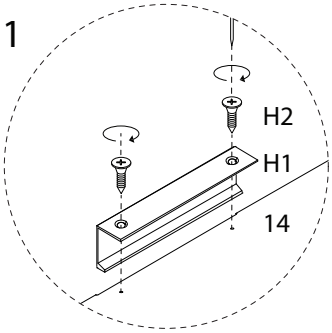

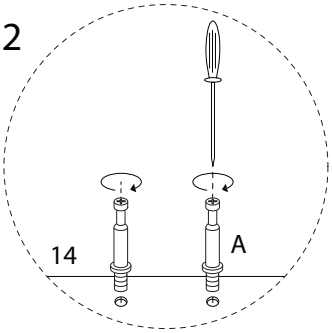

23 x 3

15	16	17	D
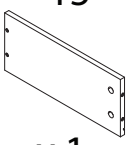	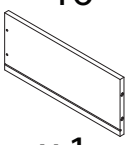	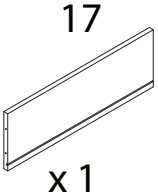	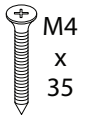 M4 x 35
x 1	x 1	x 1	x 4

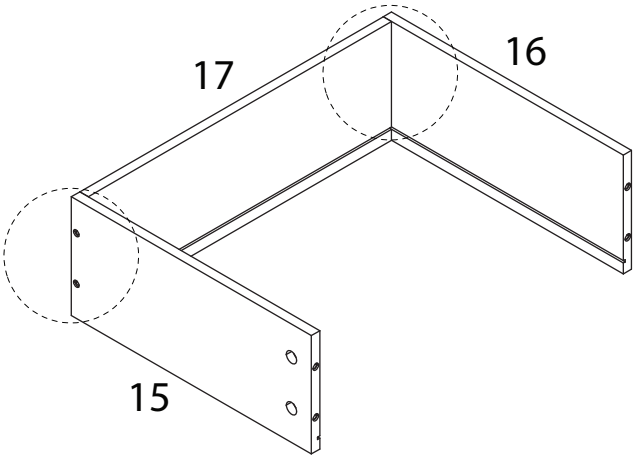

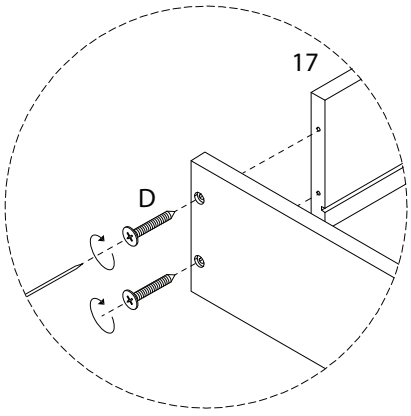

24 x 3

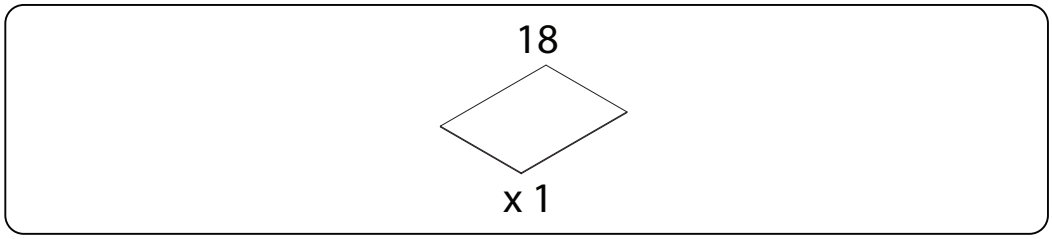

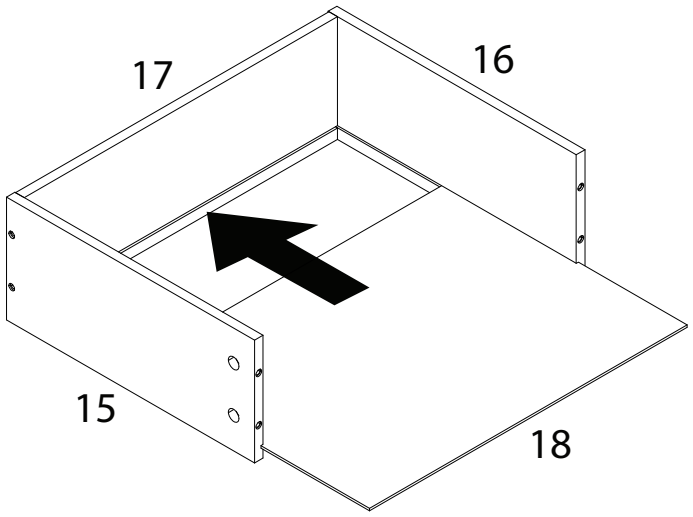

25 x 3

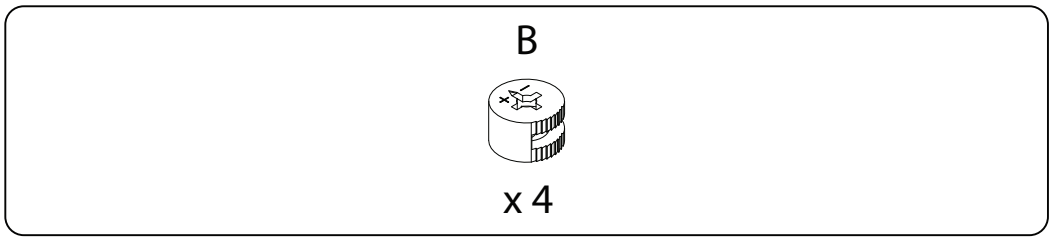

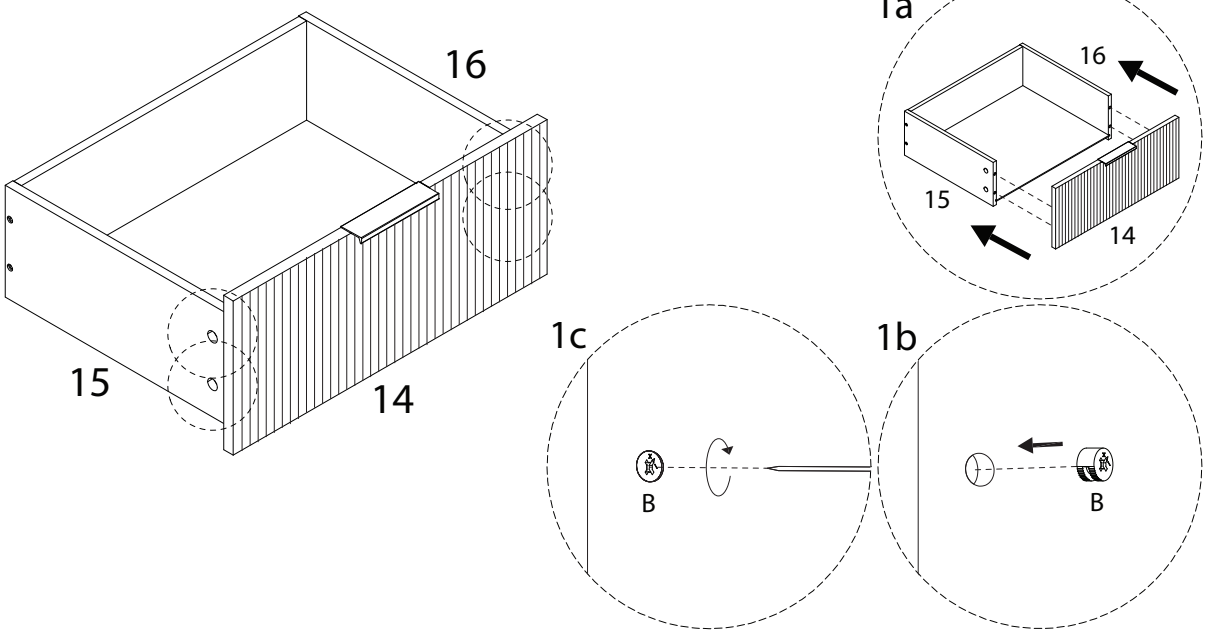

26 x 3

DL	DR	J
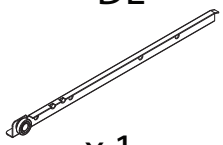	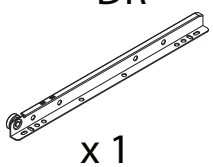	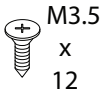 M3.5 x 12
x 1	x 1	x 4

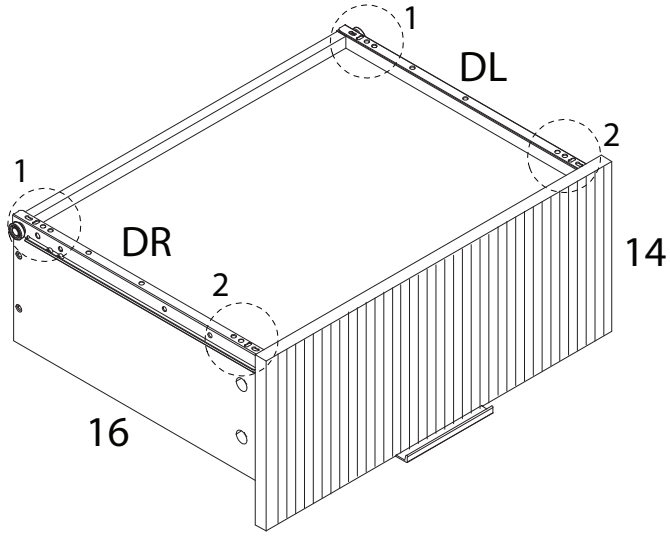

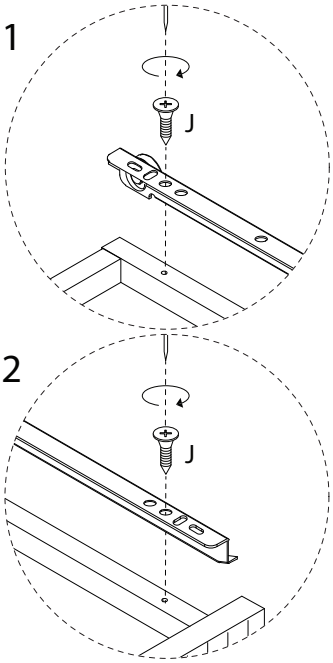

27 x 4

19	A	H1	H2
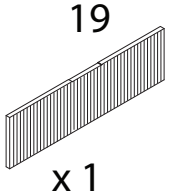	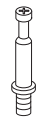	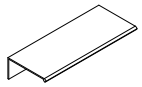	 M3 x 12
x 1	x 5	x 1	x 2

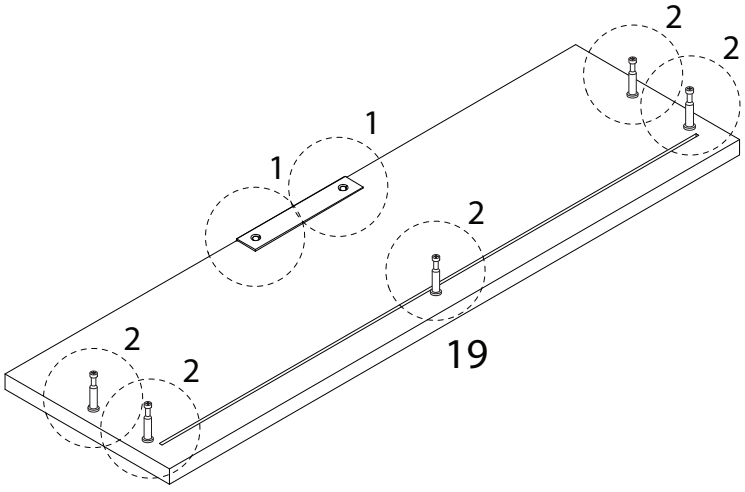

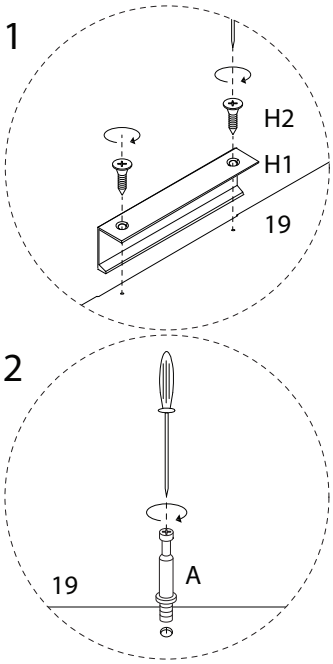

28 x 4

15	16	20	22	D
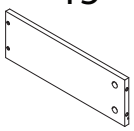	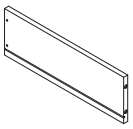	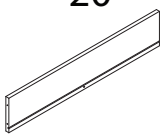	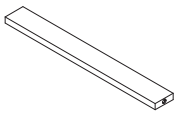	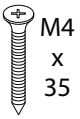 M4 x 35
x 1	x 1	x 1	x 1	x 5

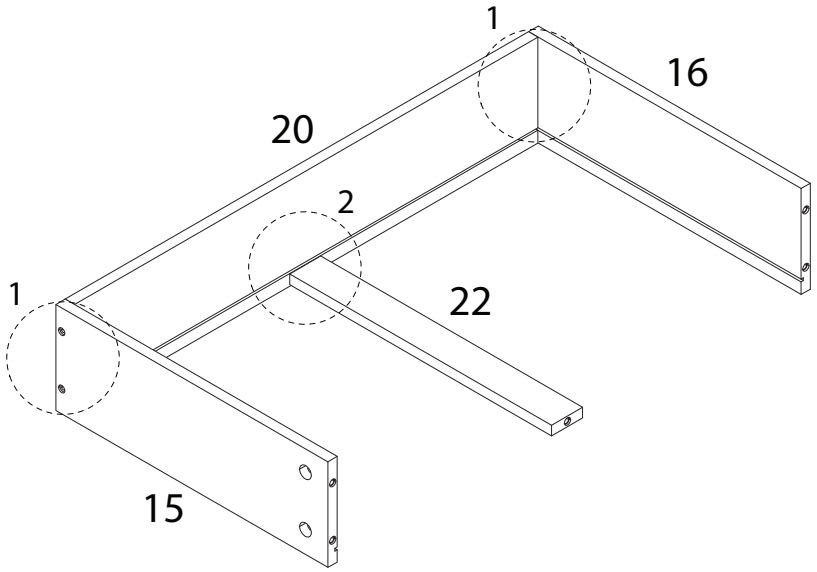

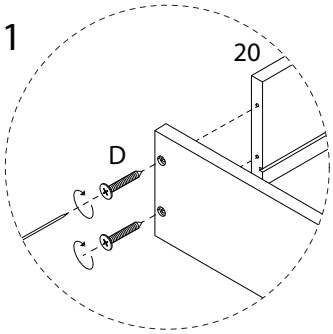

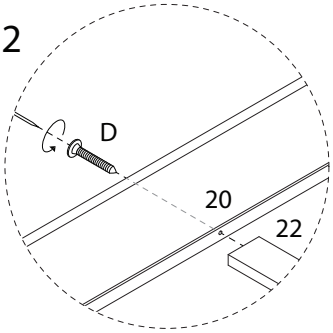

29 x 4

21
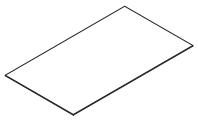
x 1

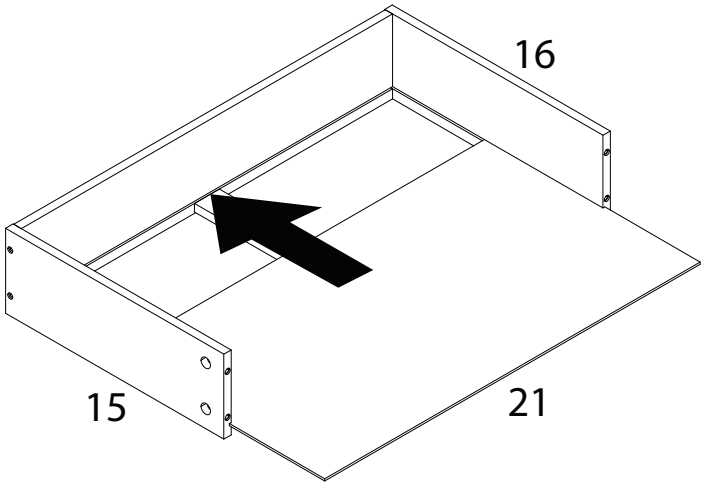

30 x 4

B



x 5

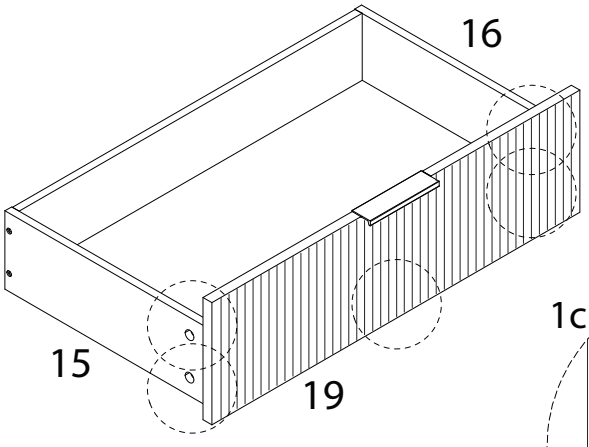

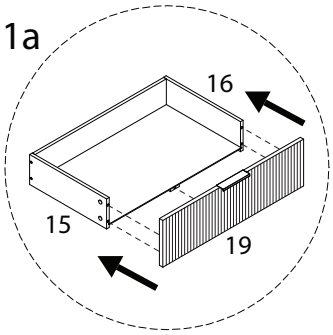

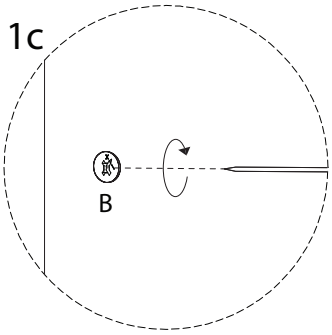

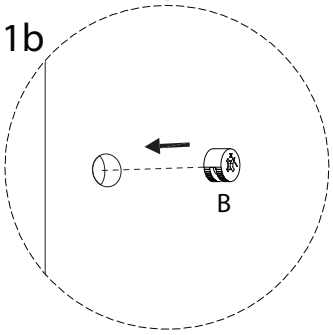

31 x 4

DL

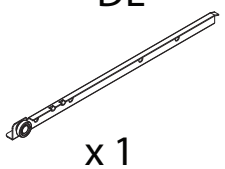

x 1

DR

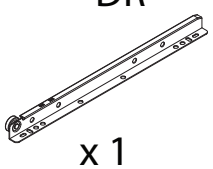

x 1

J

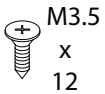

x 4

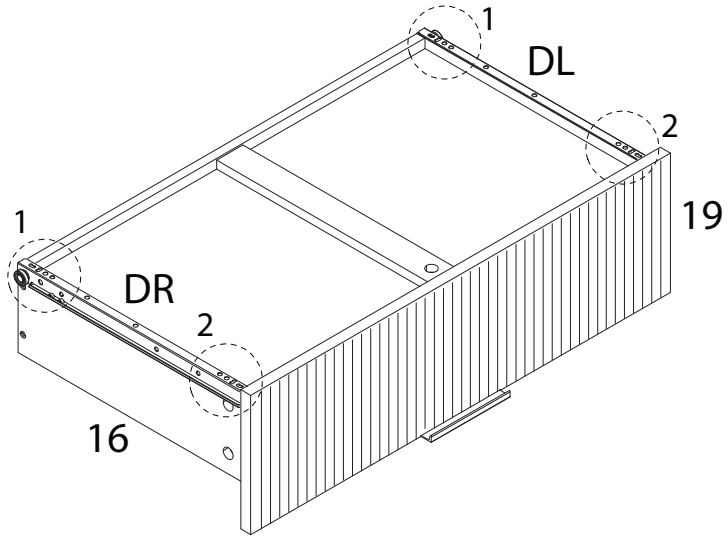

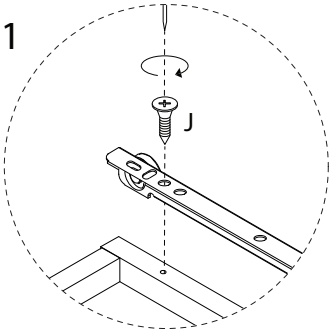

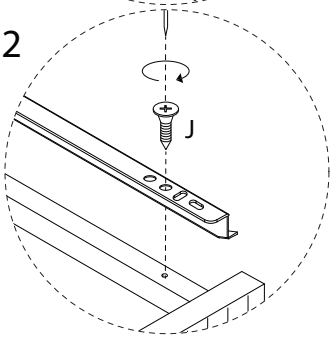

32

