Assembly Instructions

Caution : You must read this before you proceed.

Care & Maintenance

⊘  • Not for commercial use. For residential use only.

⊘  • Do not put hot items directly on furniture surface.

⊘  • Do not clean furniture with harsh cleansers or polish.

√  • To obtain the longest lifespan of your outdoor products, minimizing exposure to direct sunlight is recommended.

⊘  • Children should not climb or jump on the furniture.

⊘  • Do not write on furniture without a padded harrier to protect the surface.

√  • To obtain the longest lifespan of your outdoor products, avoid extended and lengthy exposure to rain, snow, and direct sunshine. Whenever possible cover the product and/or place under patio or awnings..

⊘  • Stains may be removed with mild soap solution and damp cloth.

√  • Dust and pick-up spills using a clean, non-colored, lint-free cloth.

Please look in carton for hardware pack.

ASSEMBLY INSTRUCTIONS
DINING TABLE



PART LIST

Label	Picture	Description	QTY
1	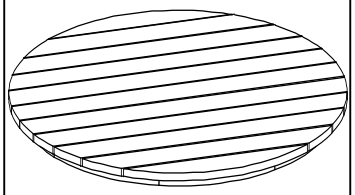	Table Top	1
2	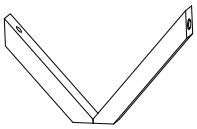	V-Shaped Legs	4
3	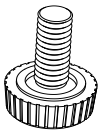	Adjustable leveler	4

HARDWARE

Label	Picture	Description	QTY
A	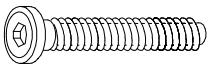	Bolt (M8*50mm)	5
B	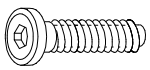	Bolt (M8*25mm)	9
C	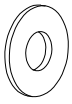	Washer	13
D	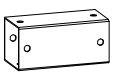	Square Metal Tube	1
E	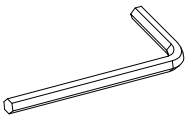	Allen Wrench	2

ASSEMBLE STEPS

Overview

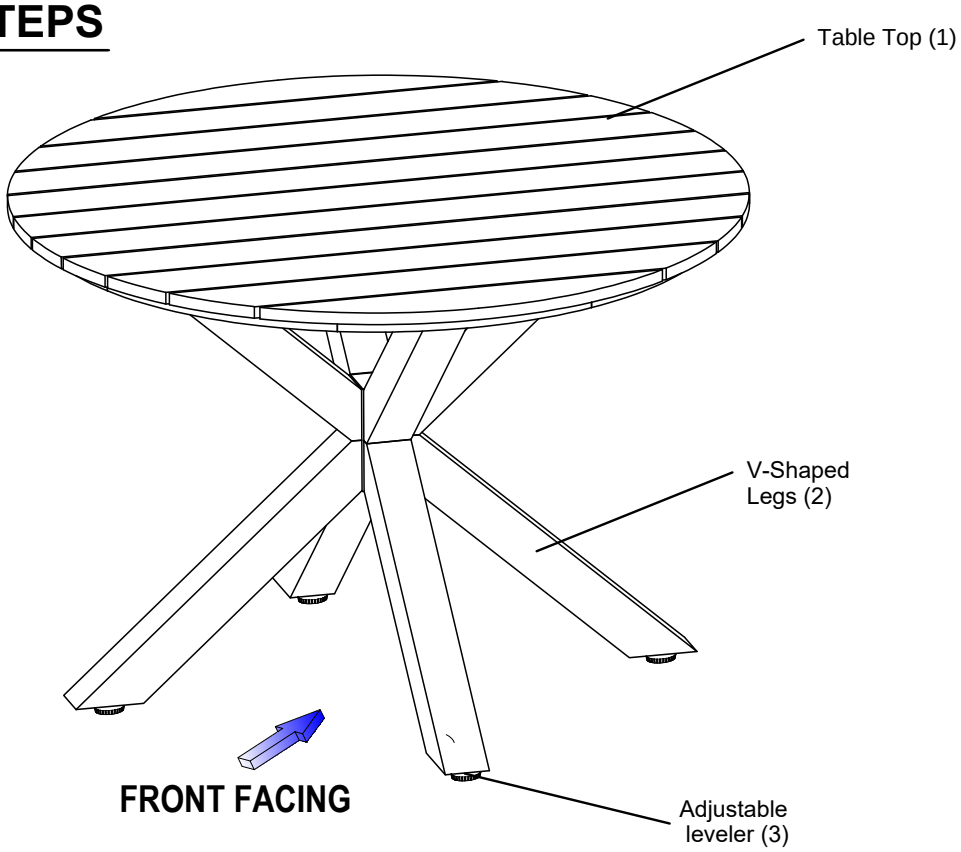

This table has multiple parts and may require up to 30 minutes to assemble.
To give you an overview of the table parts, the above picture is to help you put the various parts into perspective.Please read through the instructions below to familiarise yourself with the parts and steps before assembly.

Step 1:

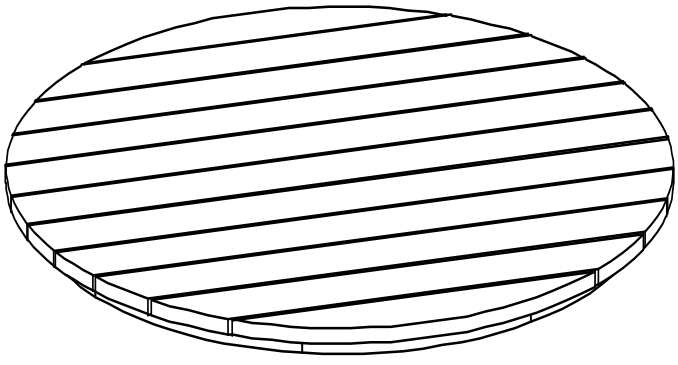

Table Top

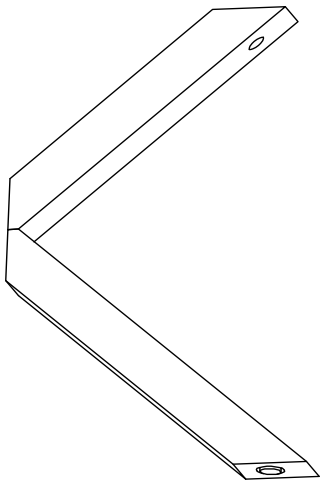

V-Shaped Legs

Unpack and place all back on the clean , non- marring surface.

Step 2:

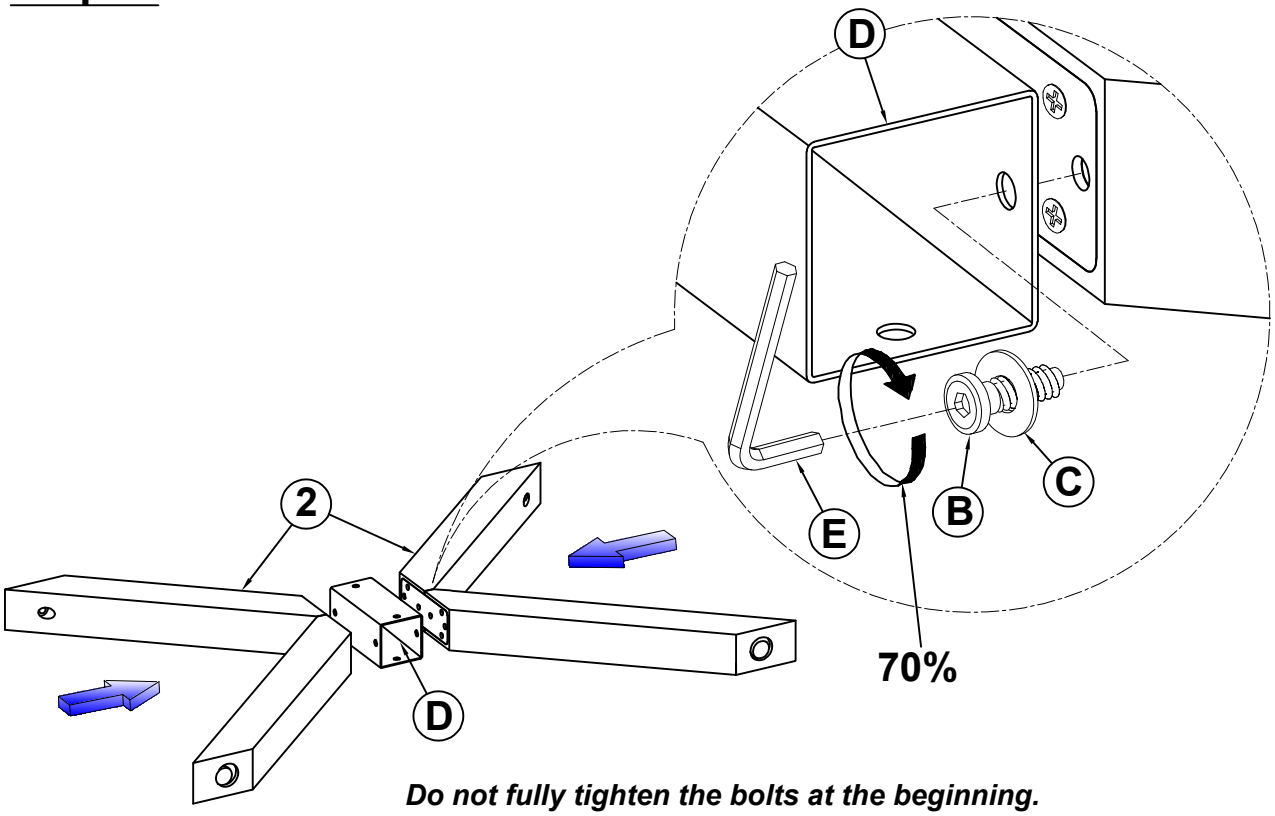

Do not fully tighten the bolts at the beginning.
During initial assembly, tighten bolts to about 70–80% of full strength, just enough to hold the parts in place.

Step 3:

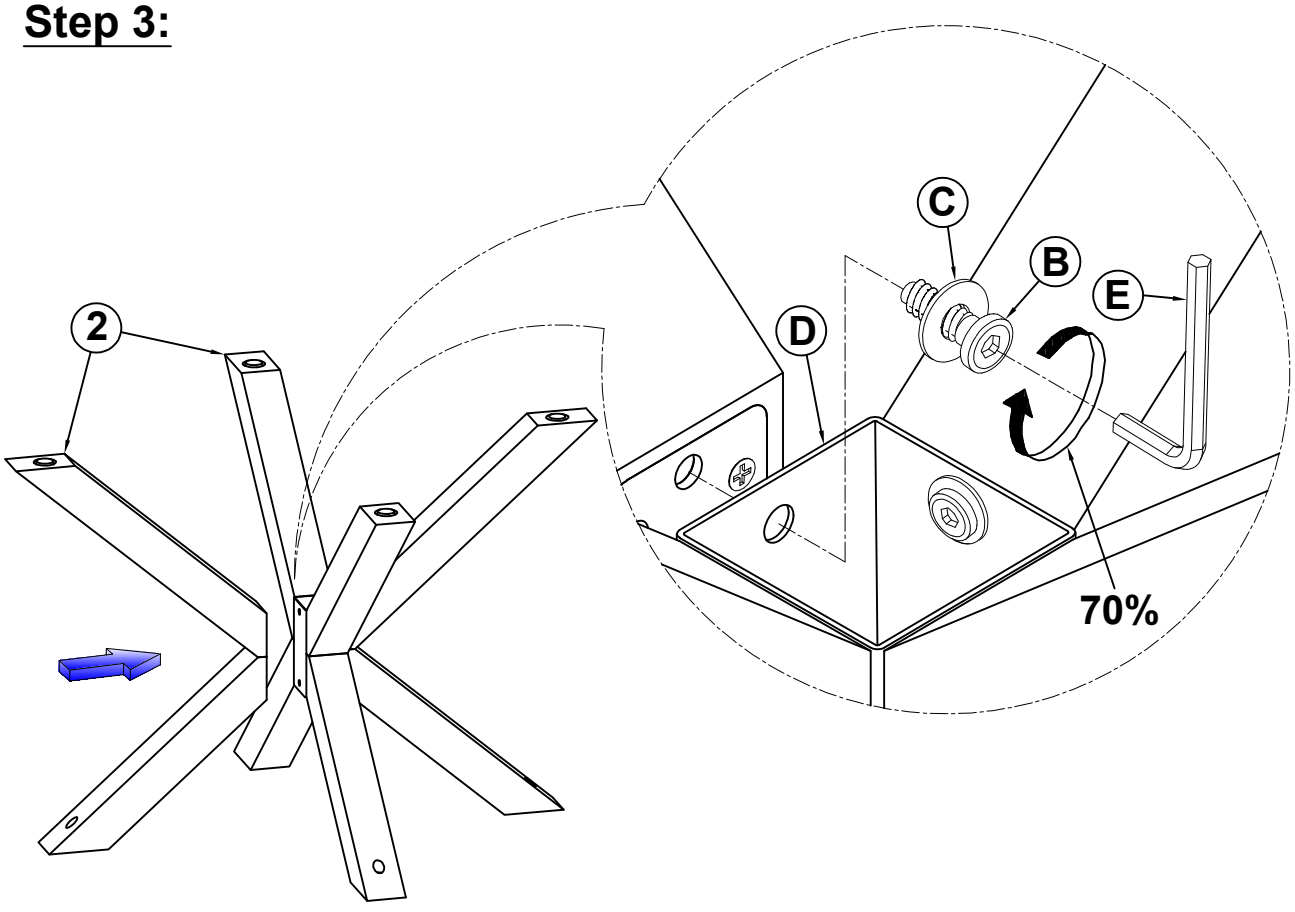

Step 4:

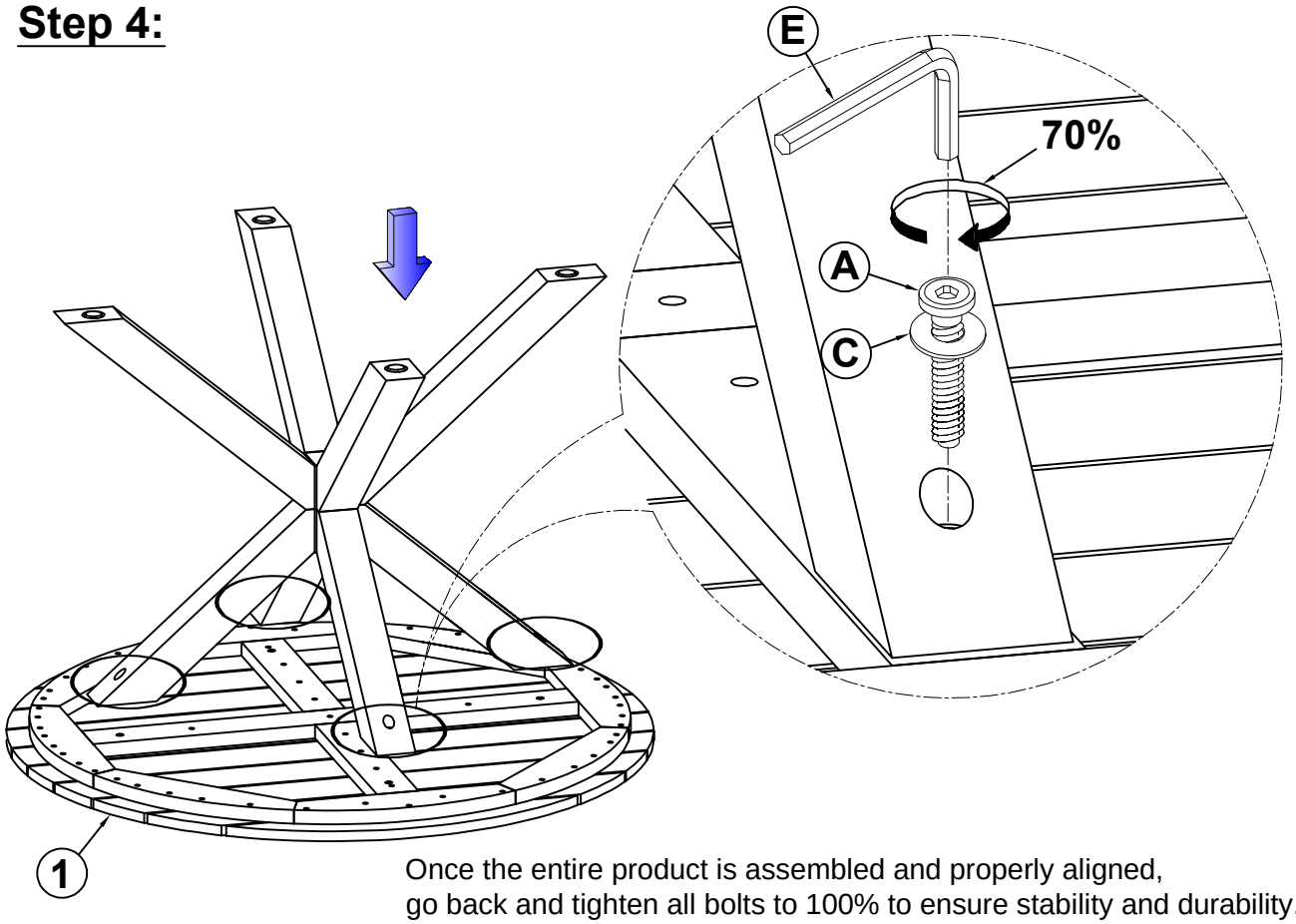

Once the entire product is assembled and properly aligned,
go back and tighten all bolts to 100% to ensure stability and durability.

Step 5:

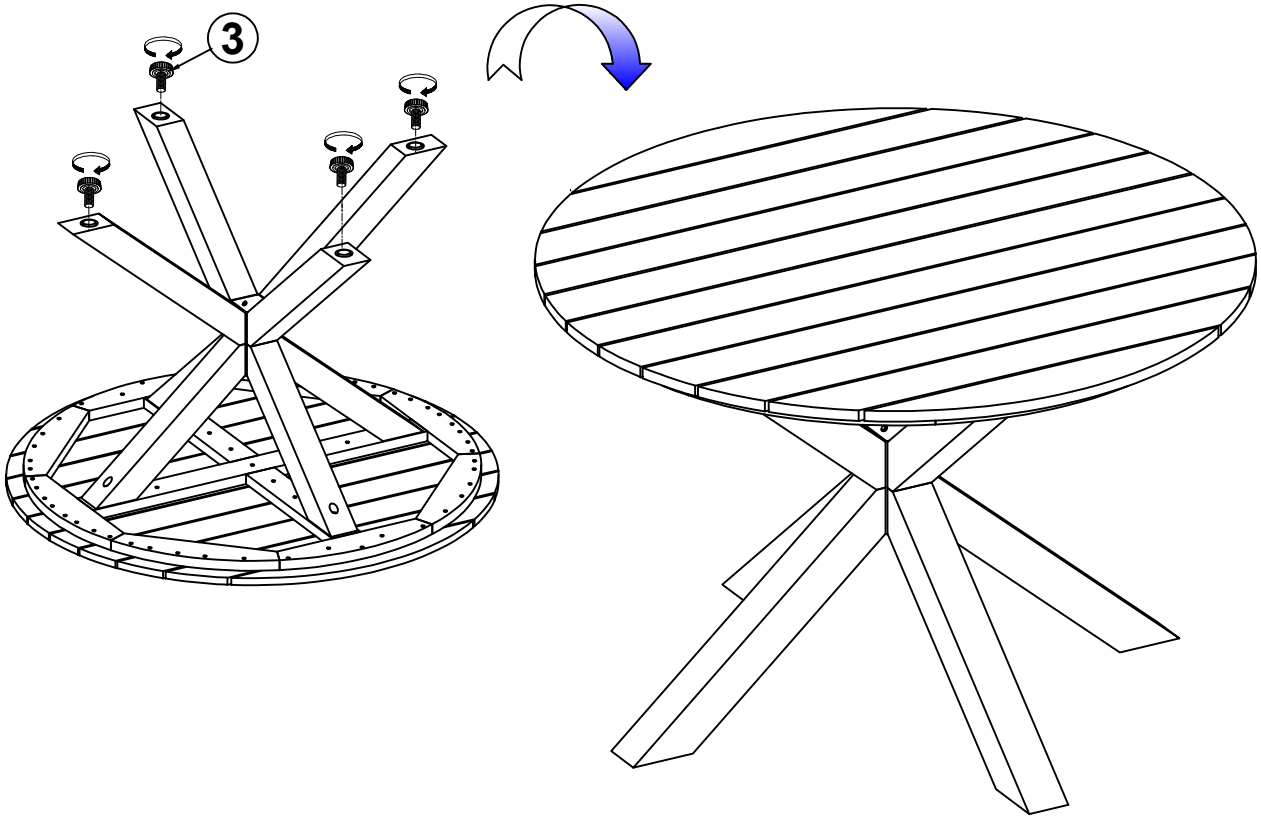

Balance with leverler