ASSEMBLY INSTRUCTION

NO.	SKETCH	DESCRIPTION	QTY
A		BACK	1
B	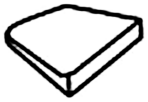	SEAT	1
C		STRETCHER	1
D	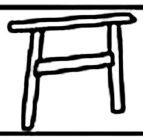	LEFT ARM	1
E		RIGHT ARM	1

NO.	SKETCH	DESCRIPTION	QTY
F		BOLT 1/4*70mm	2
G		BOLT 1/4*60mm	4
H		WASHER (SMALL)	6
I		WASHER (BIG)	2
J		ALLEN WRENCH	1
K		CAP	6
L		DOWEL	4
M		BOLT 1/4*50mm	2
N	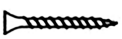	Wood screw 5*50mm	2

STEP 1

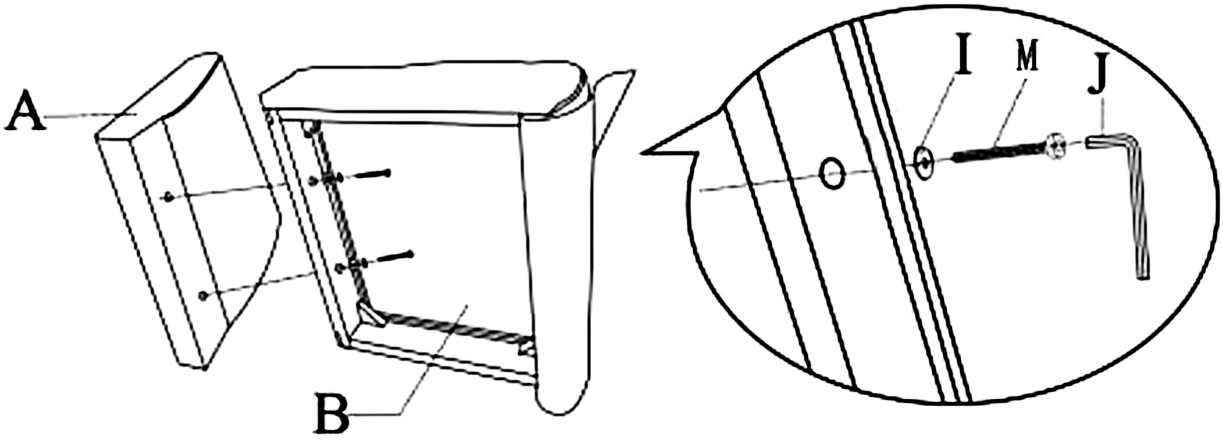

STEP 2

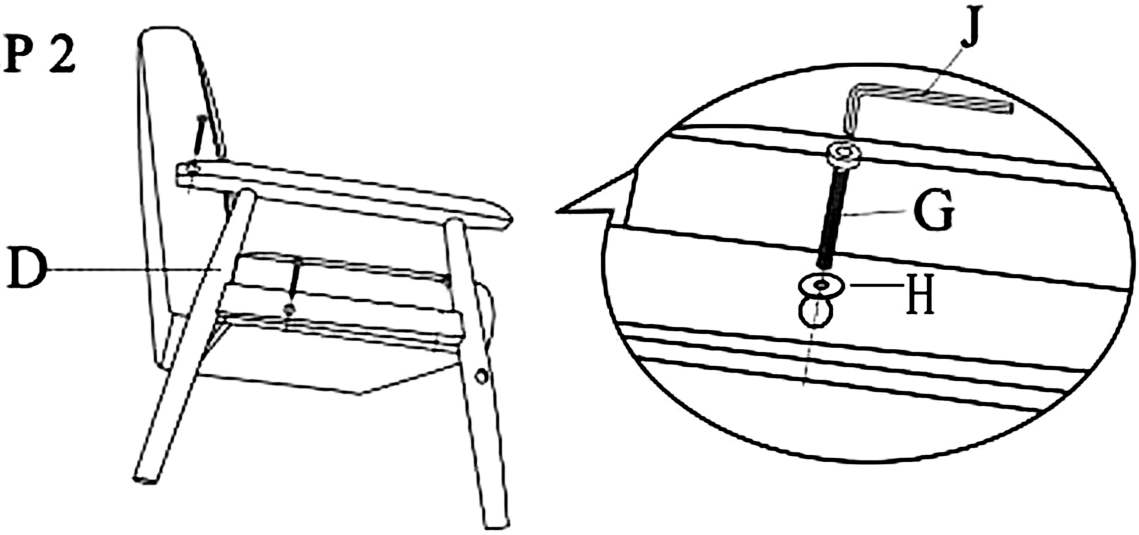

Note: During the installation of Step 1 and Step 2, screw should not be tightened first. After the installation of Step 4 and Step 5, screw should be tightened together.

STEP 3

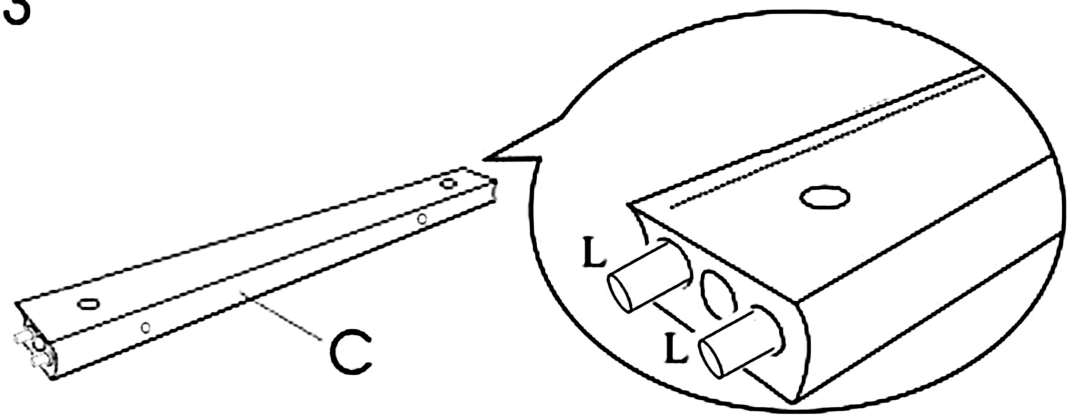

STEP 4

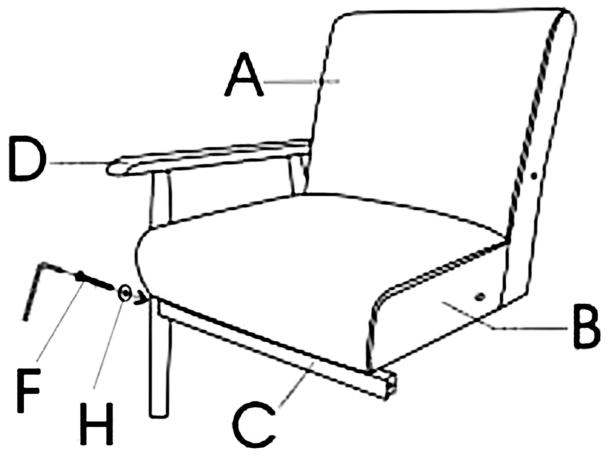

STEP 5

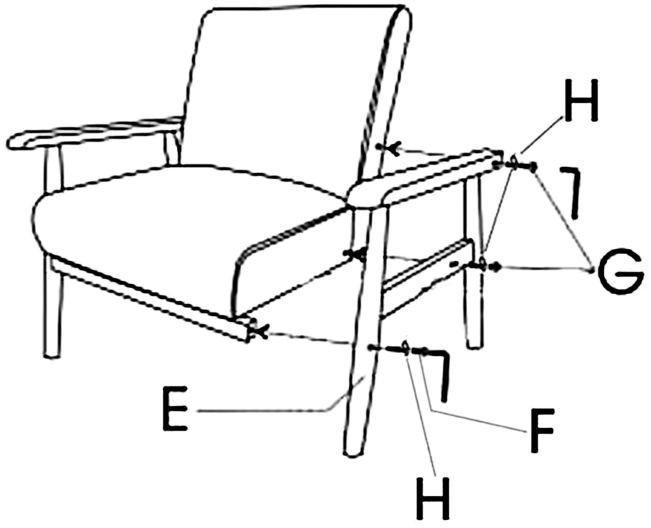

STEP 6

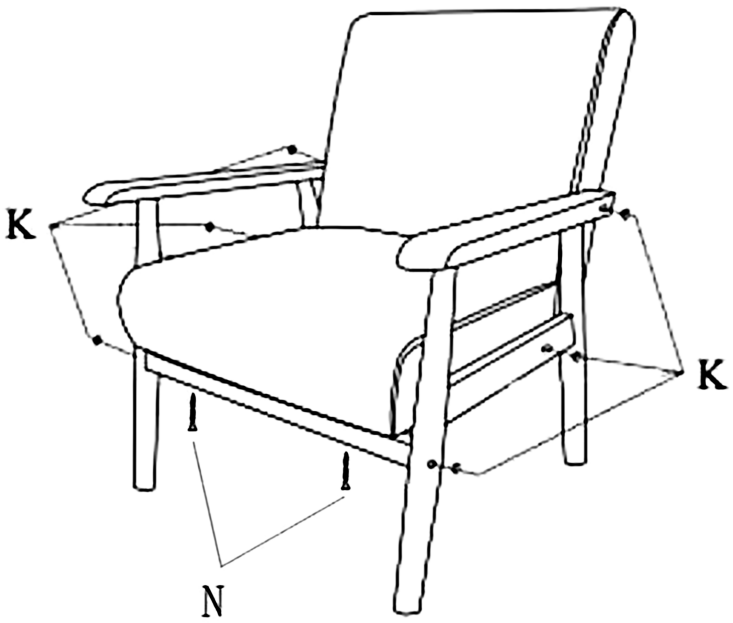

STEP 7

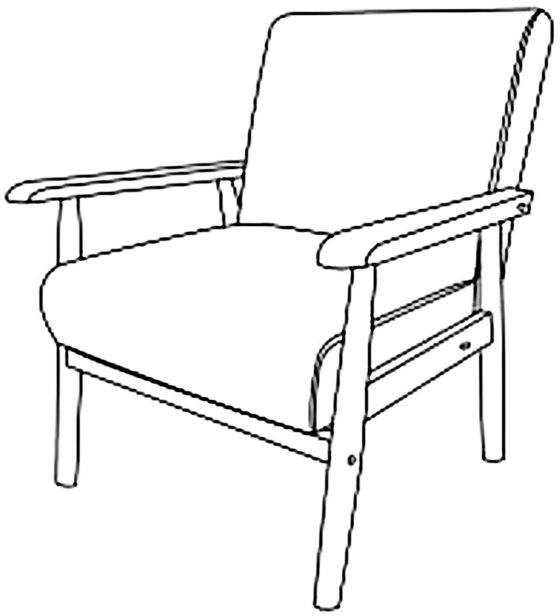

Note: Finally check and confirm that all screws are completely tightened before normal use.