Narrow Wire Mesh Flowerpot (Set of 2)

ASSEMBLY, CARE & USE INSTRUCTIONS

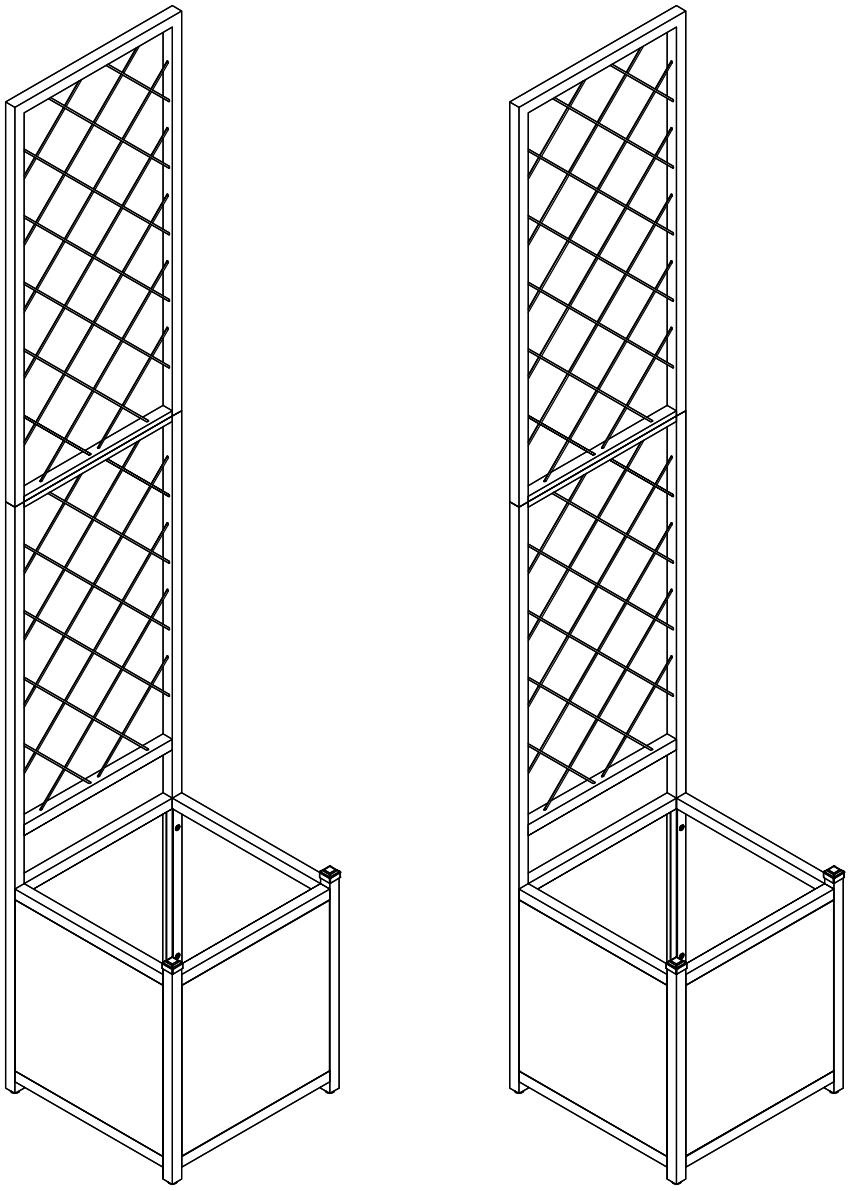

ywq26041301-2

PACKAGE CONTENTS

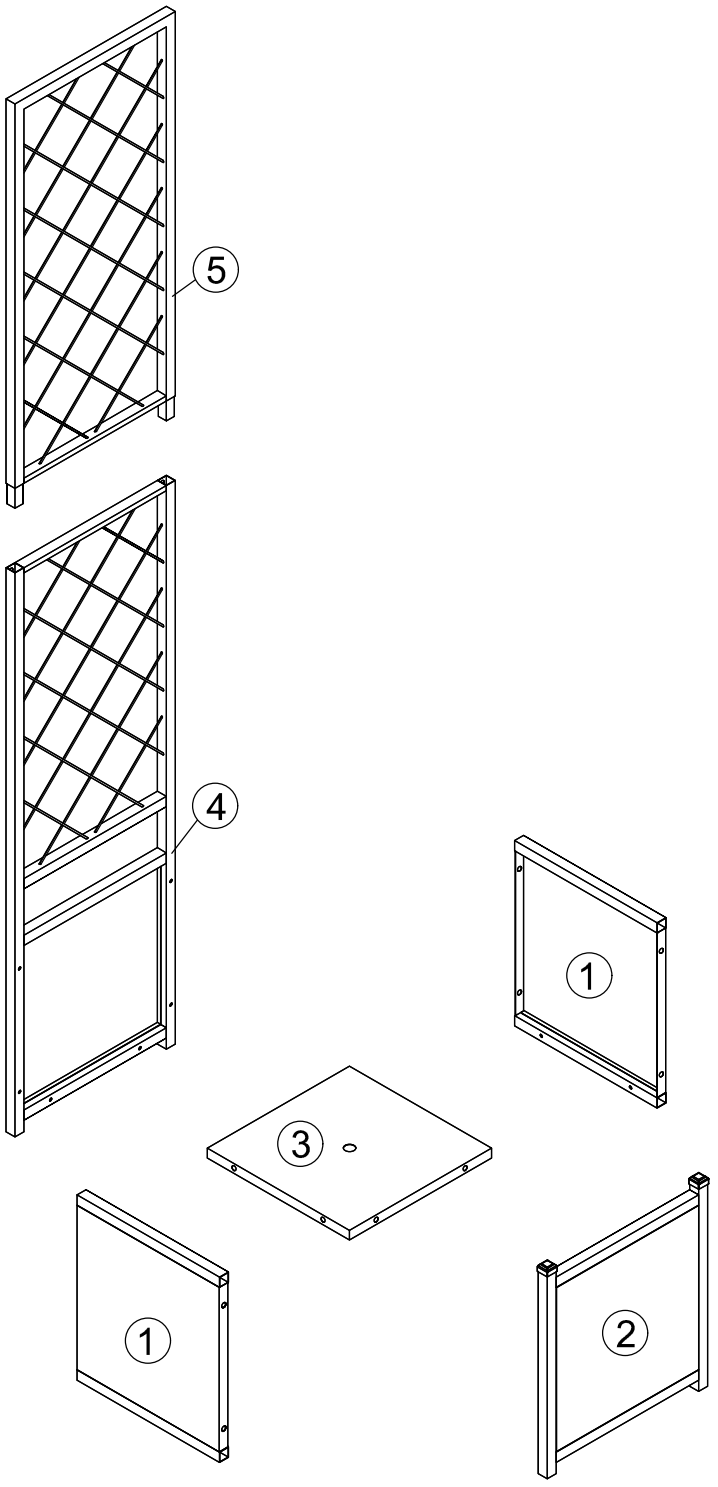

x 2

Part List

① 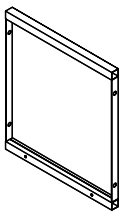 x 4	② 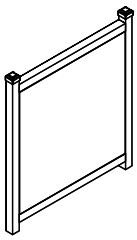 x 2	③ 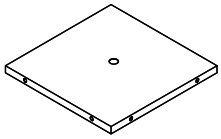 x 2	④ 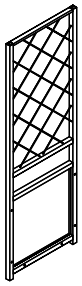 x 2
⑤ 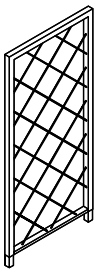 x 2			

Hardware List

A		6x10mm	Hexagonal socket screw	40+4 PCS
B		M6x15	Adjustable foot	8 PCS
C			Allen wrench S4	1 PC

Step 1

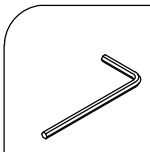

C x1

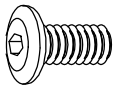

A x4

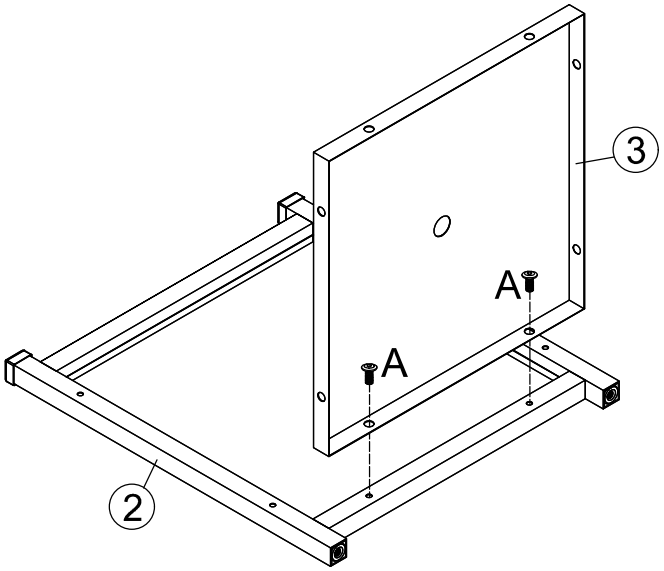

x 2

Step 2

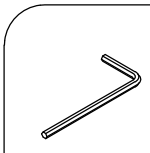

C x1

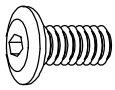

A x4

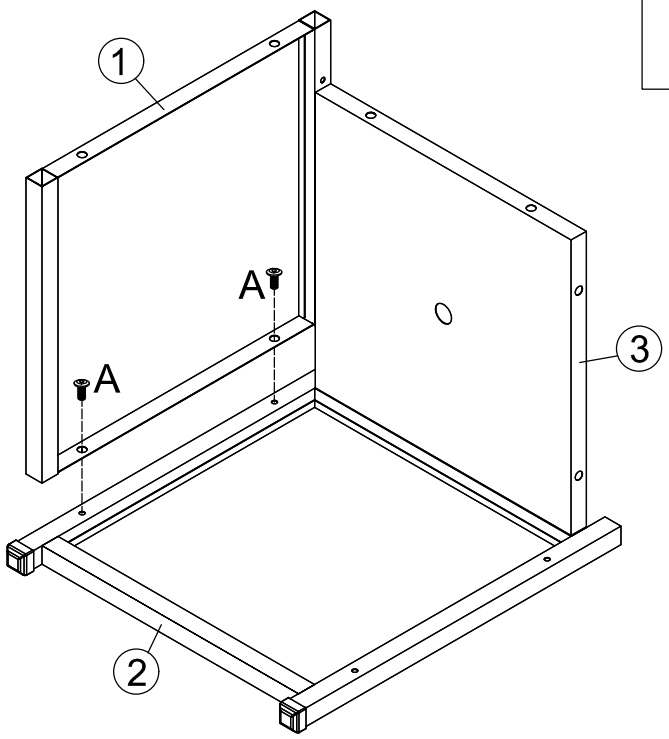

x 2

Step 3

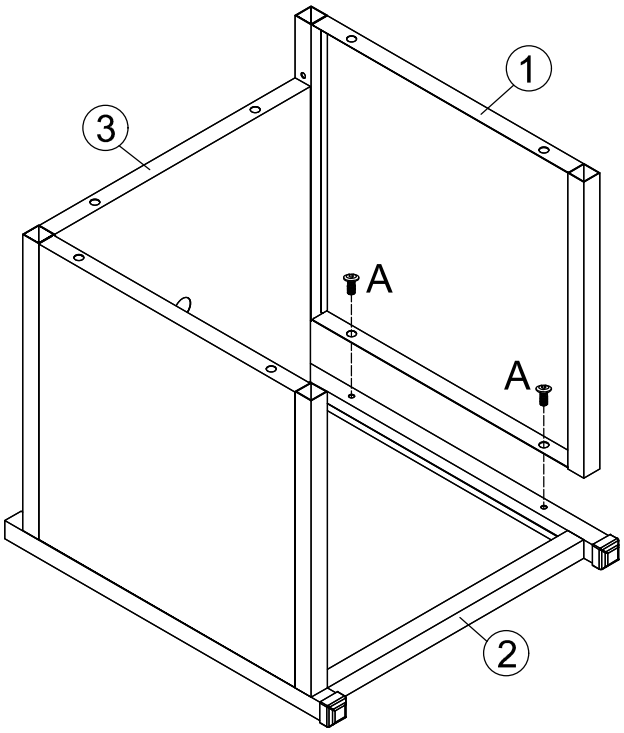

C x1

A x4

x 2

Step 4

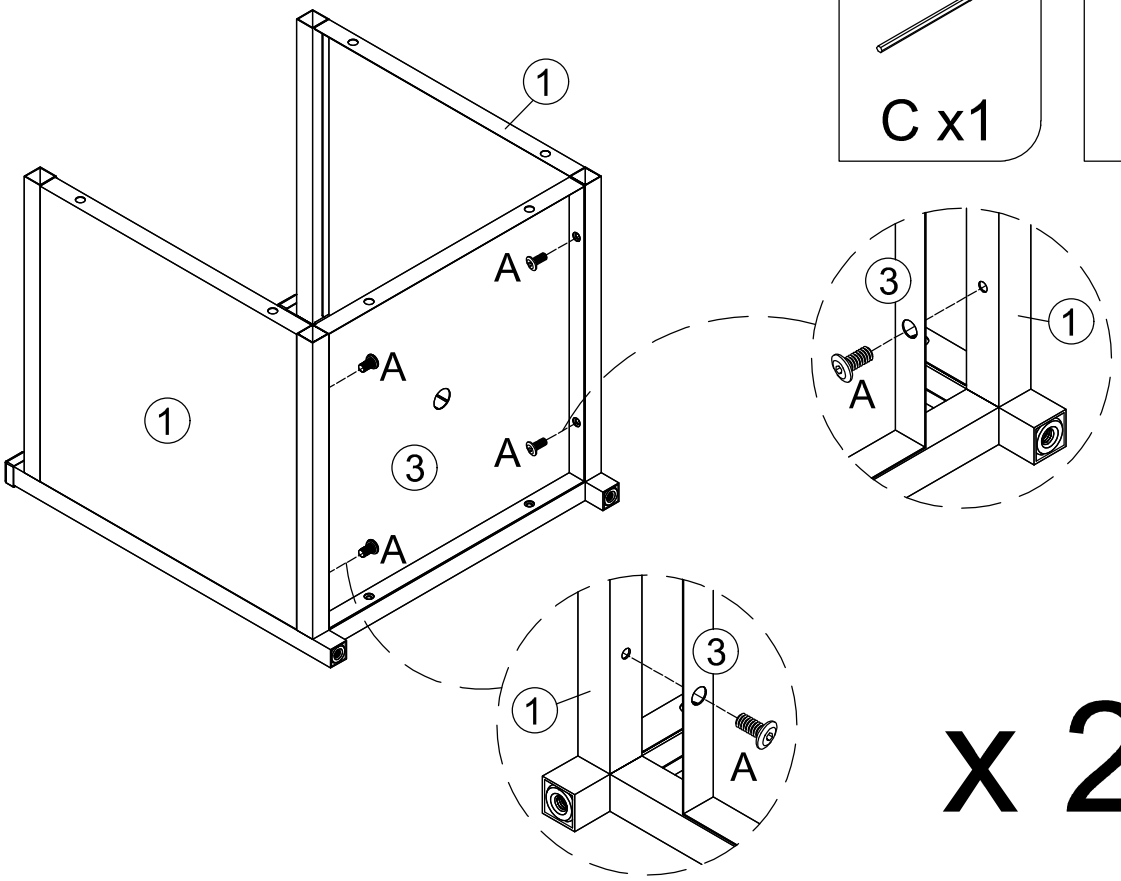

C x1

A x8

x 2

Step 5

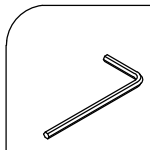

C x1

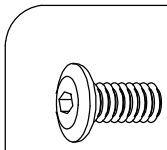

A x8

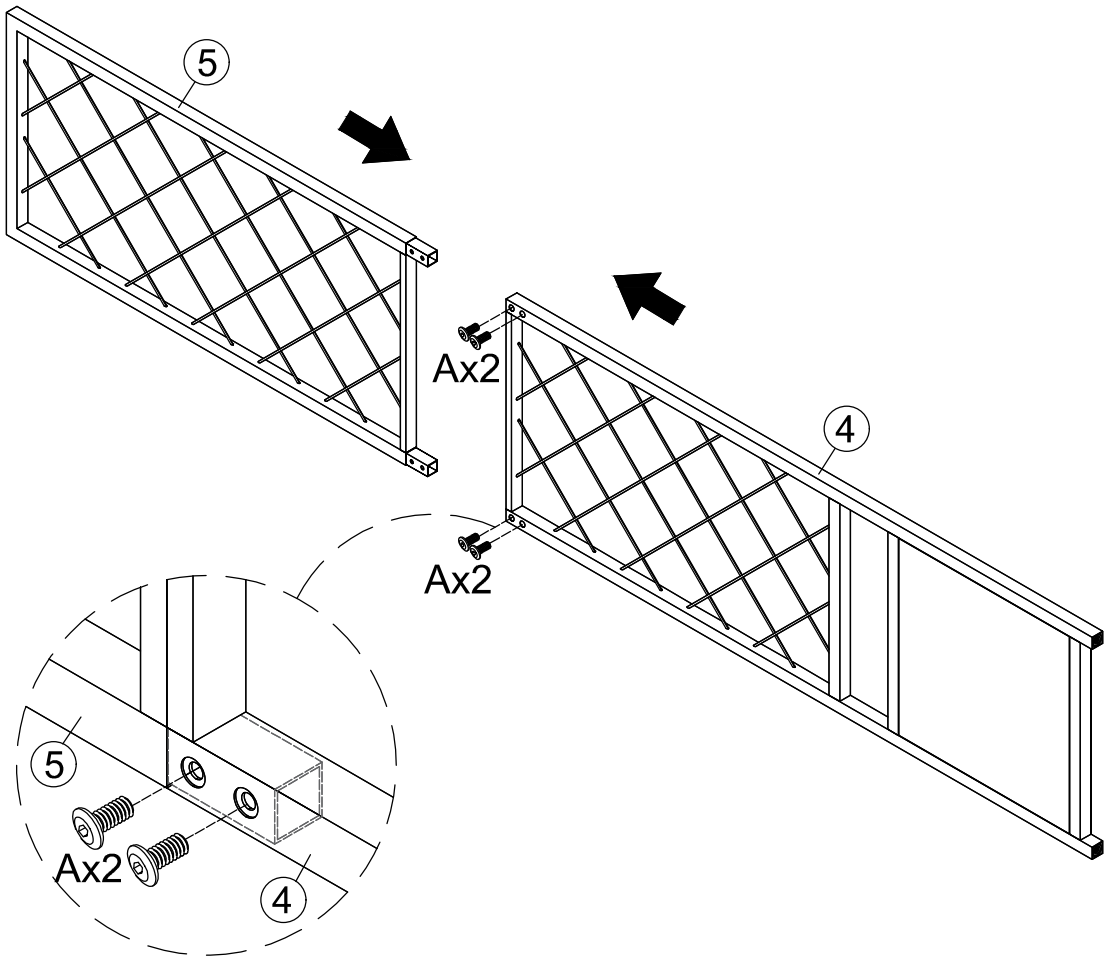

x 2

Step 6

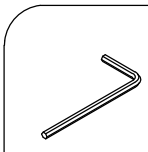

C x1

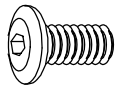

A x8

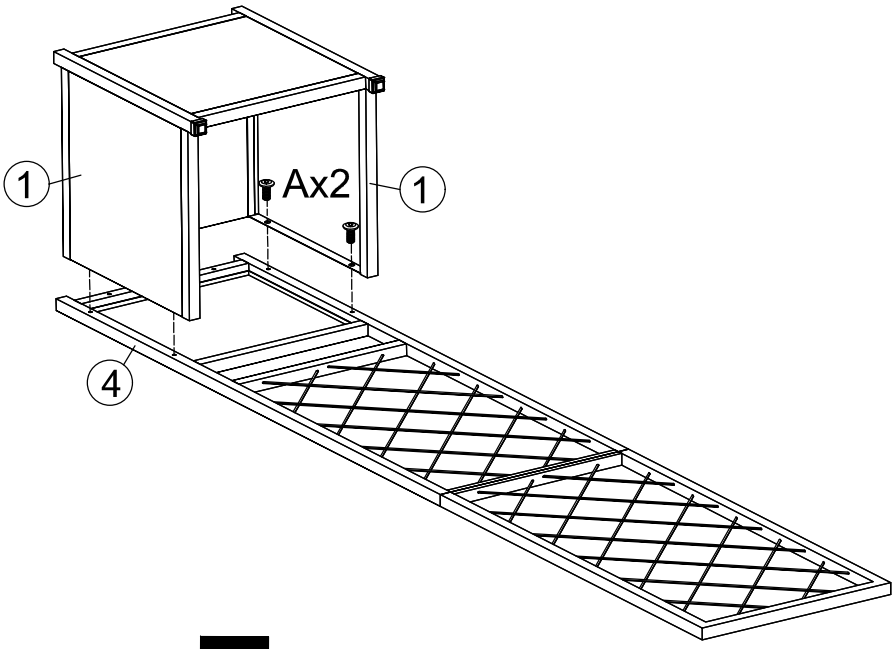

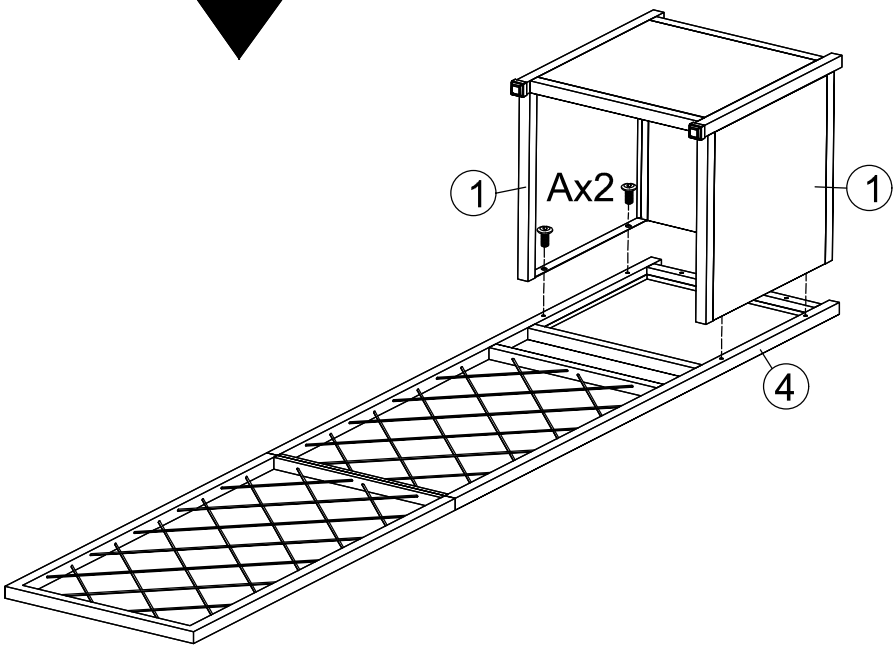

x 2

Step 7

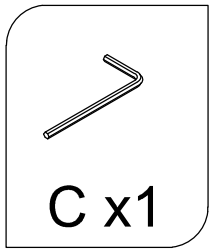

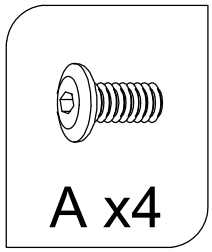

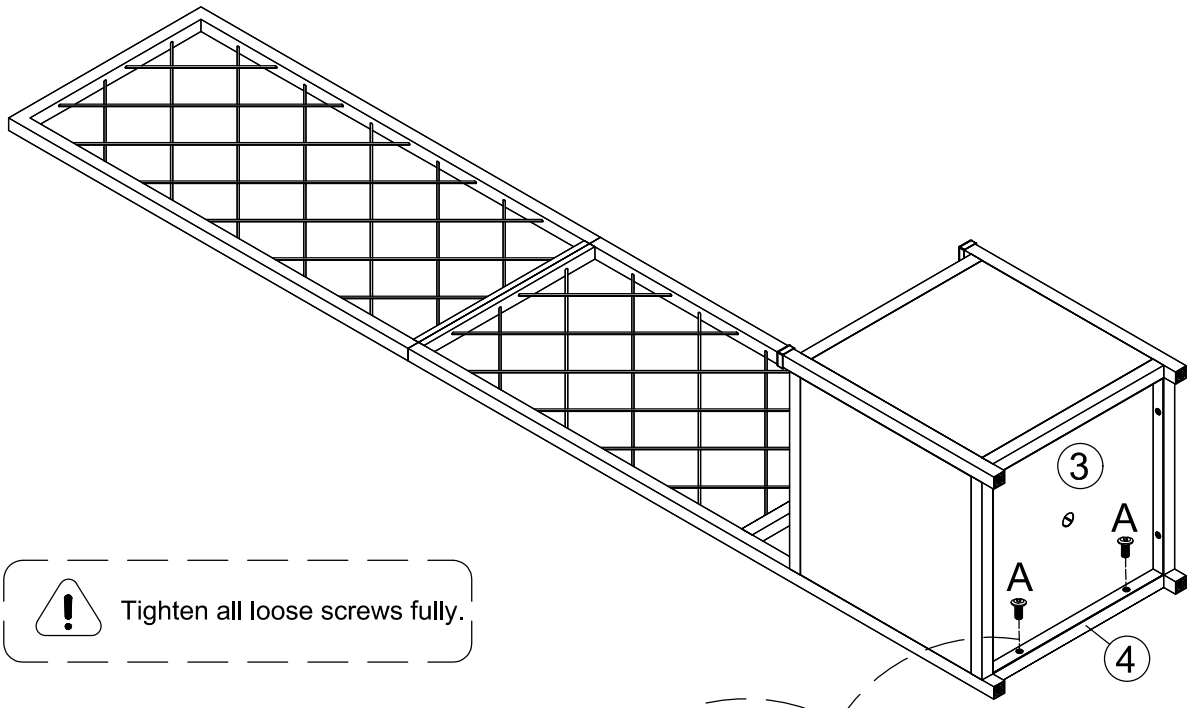

Tighten all loose screws fully.

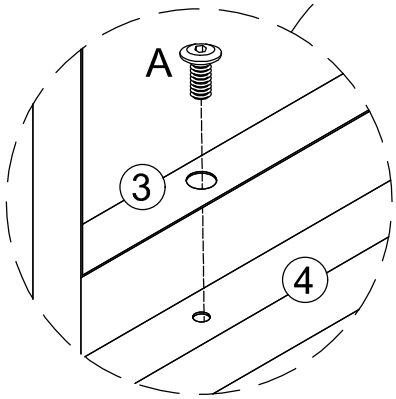

x 2

Step 8

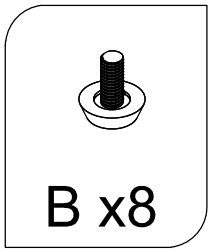

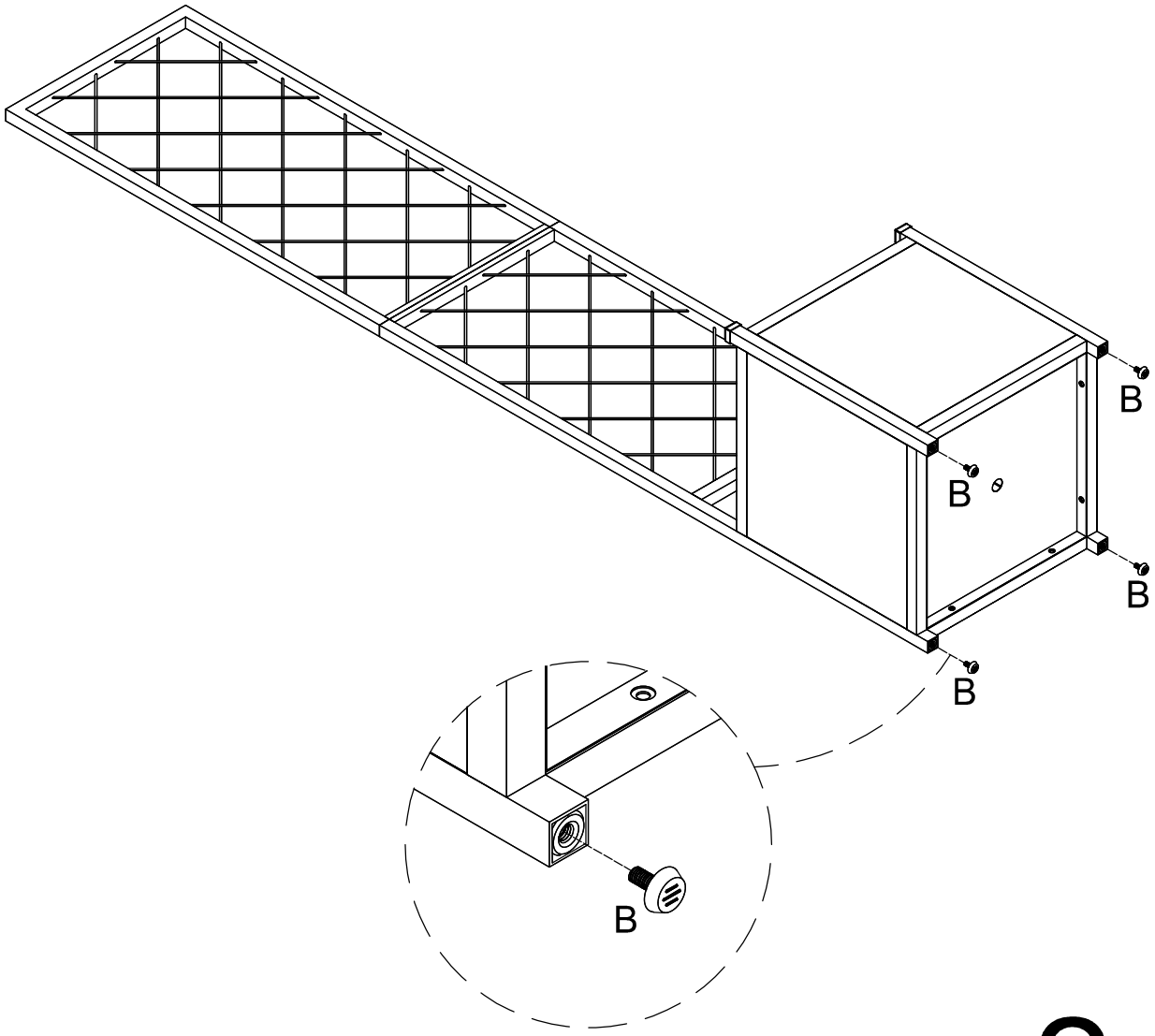

x 2

