Assembly instructions

CZ101

DINING TABLE

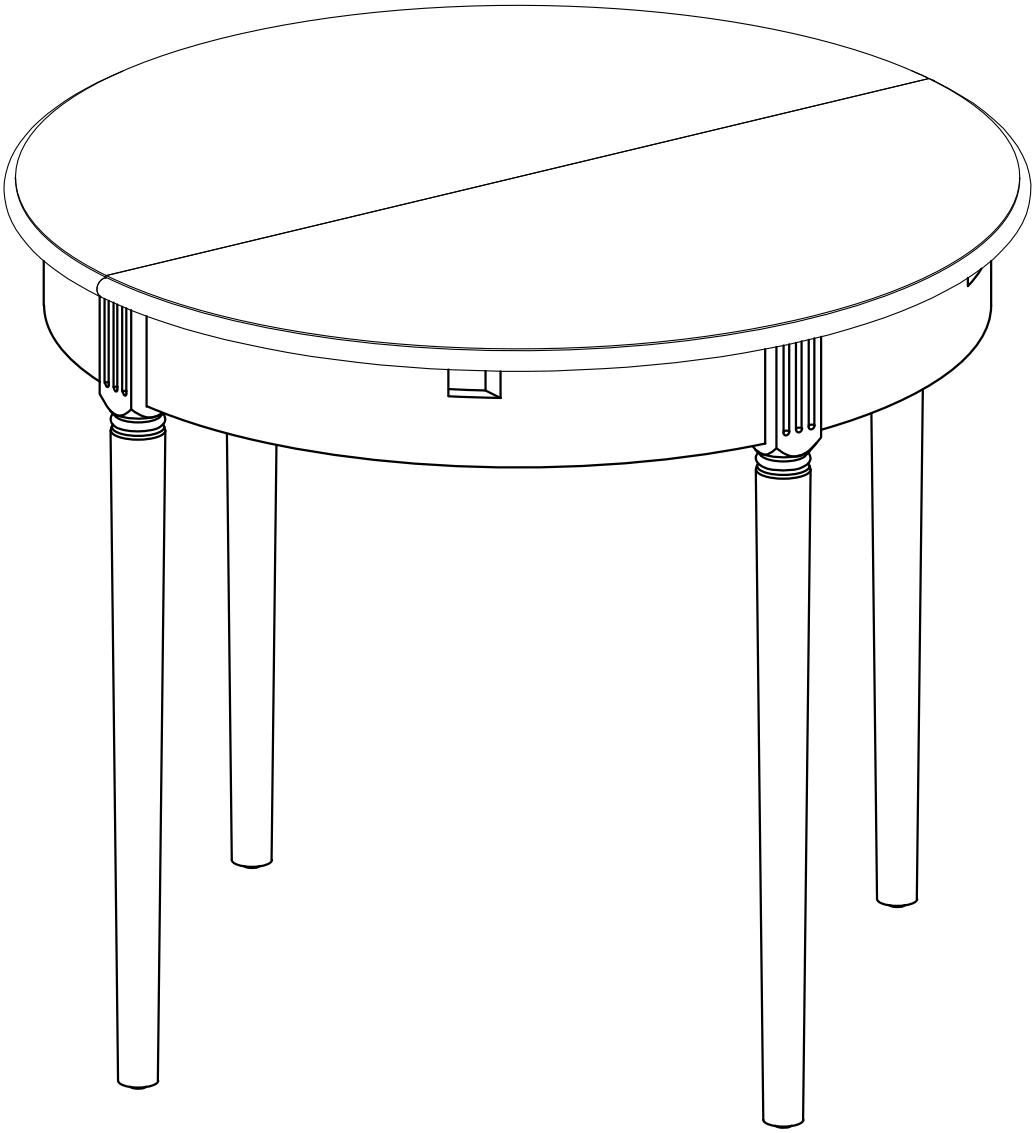

Assembly overview

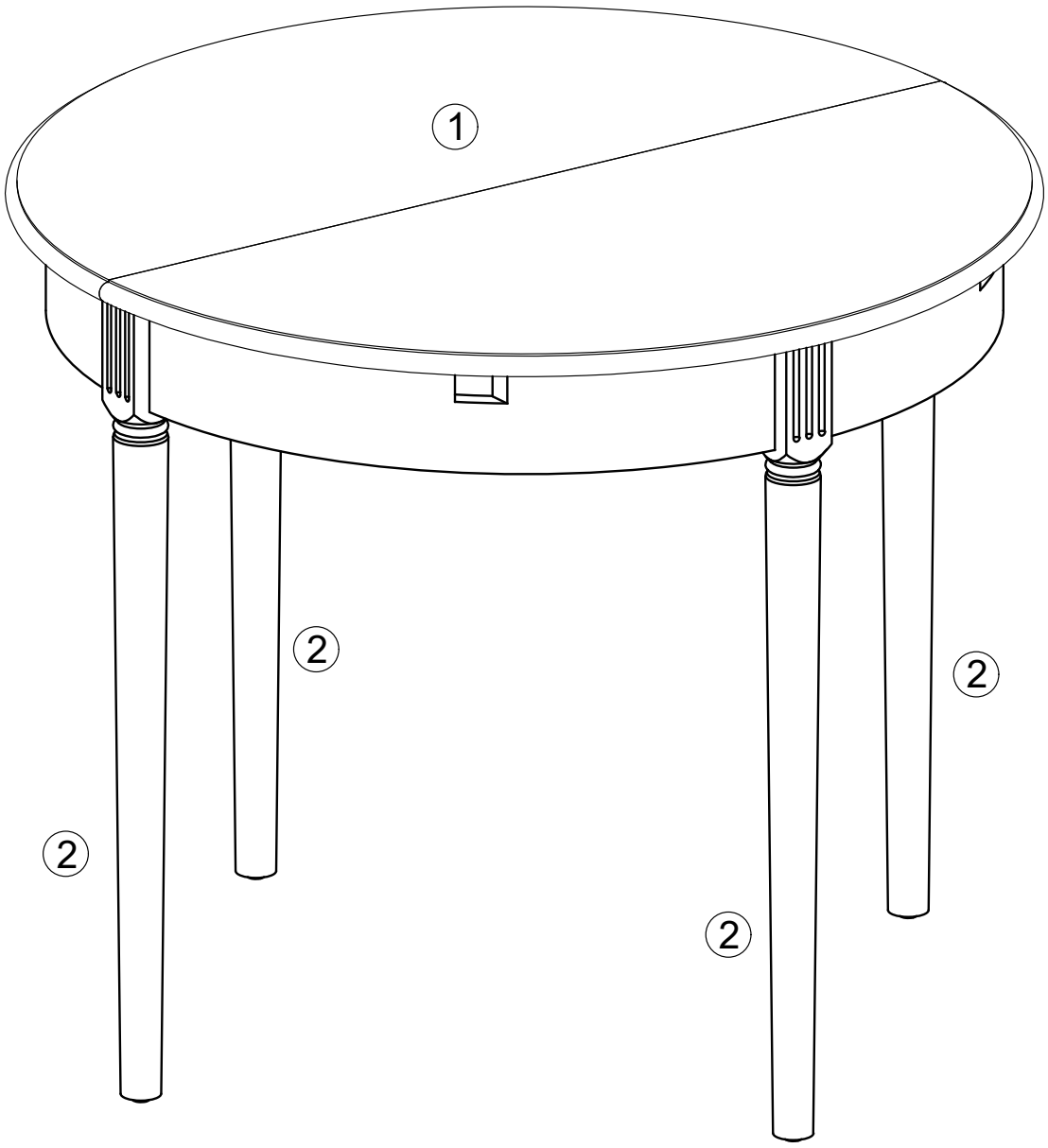

Parts, hardware and tool

1 Tabletop assembly

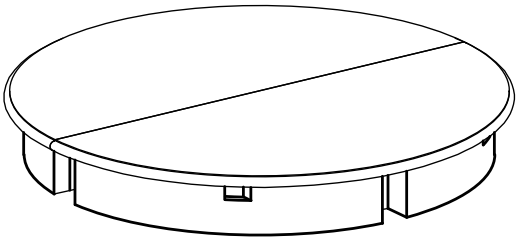

1 pc

2 Table leg

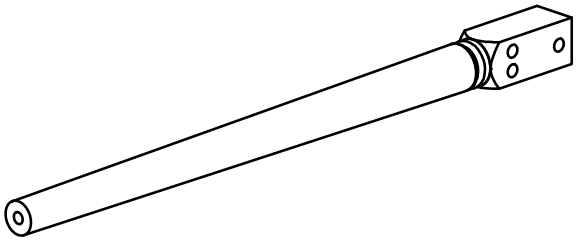

4 pcs

HARDWARE

A Hex socket bolt

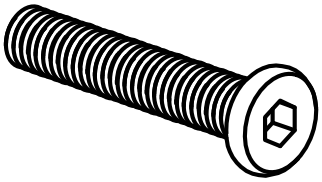

M8 x 40 mm

12+1 pcs

B Flat washer

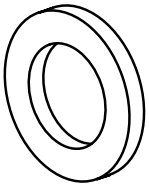

M8 x 16 x 2 mm

12+1 pcs

TOOL

C Spring washer

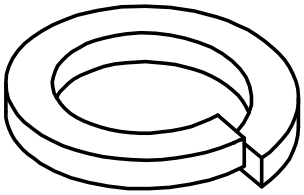

M8

12+1 pcs

D Hex key

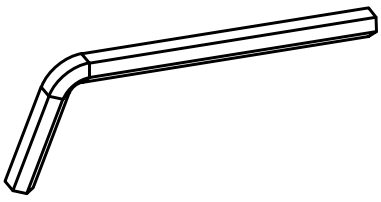

M5 x 100 mm

1 pc

01 Attach the legs

Turn tabletop assembly 1 upside down. Align legs 2 with the holes at all four positions shown. Attach the legs using bolts A, flat washers B and spring washers C. Tighten with hex key D.

HARDWARE A x 12 | B x 12 | C x 12

TOOL D x 1

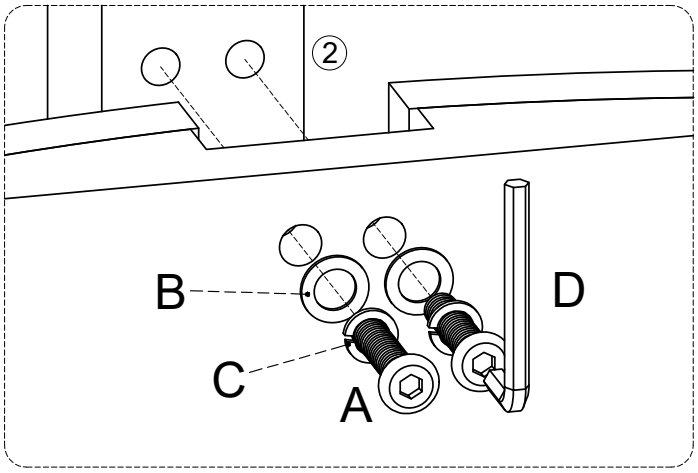

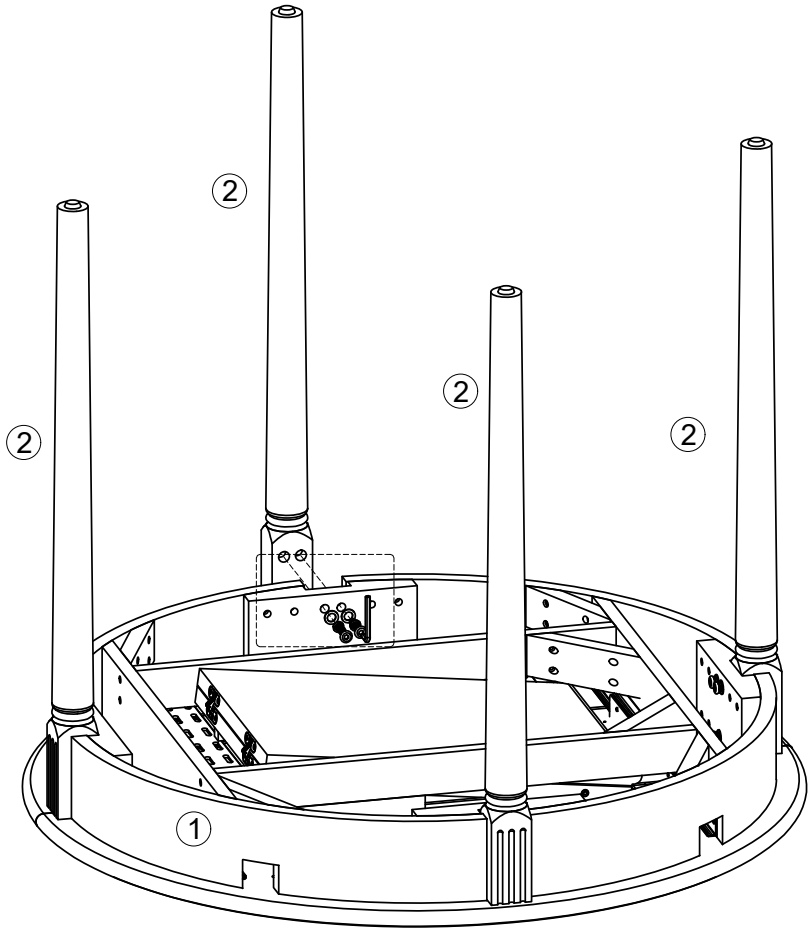

02 Level the table

Stand the table assembled in Step 1 upright as shown. If it wobbles, turn the adjustable feet at the bottoms of legs 2 until the table is stable.

⚠ Adjust the height of the feet to keep the table stable.

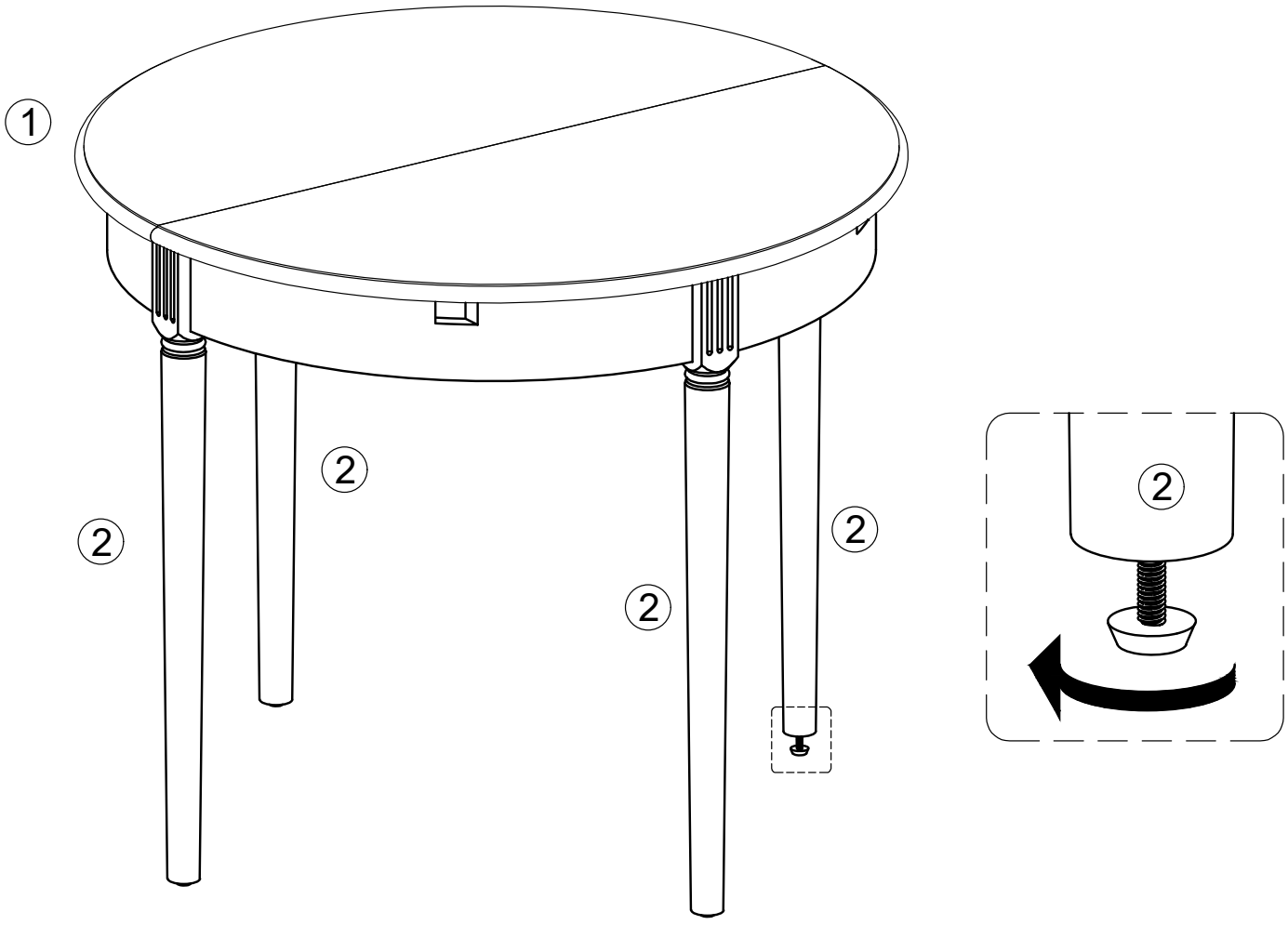

03 Open the tabletop

Pull the two main tabletop sections apart in the directions of the arrows.

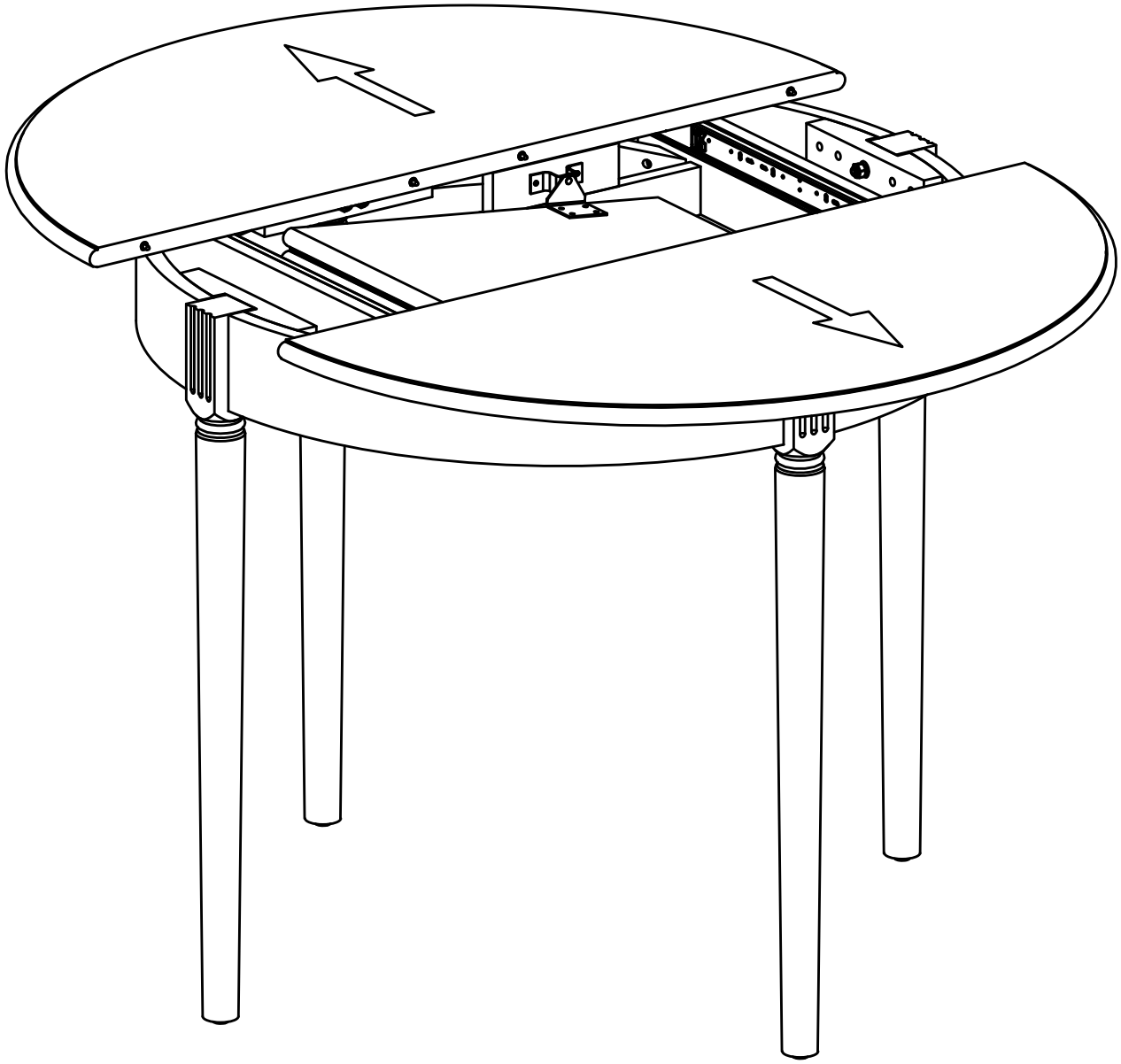

Unfold the center leaves

04 Rotate the folded leaves

Rotate the two small center leaves together in the direction of the arrow.

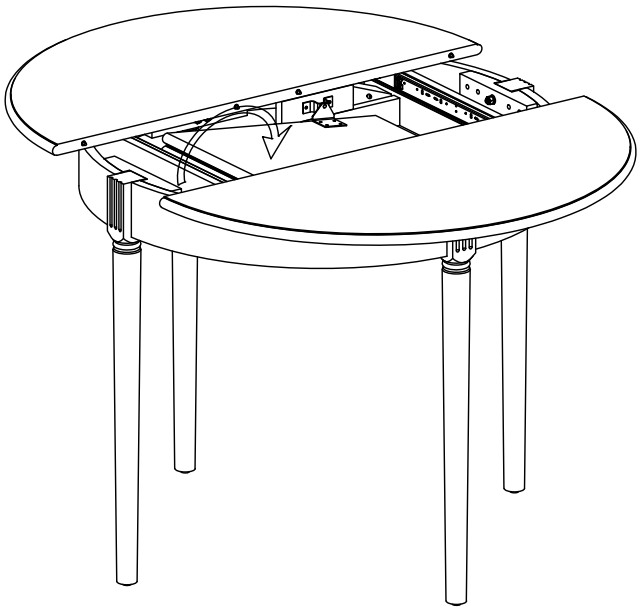

05 Unfold the upper leaf

Rotate the upper small center leaf in the direction of the arrow.

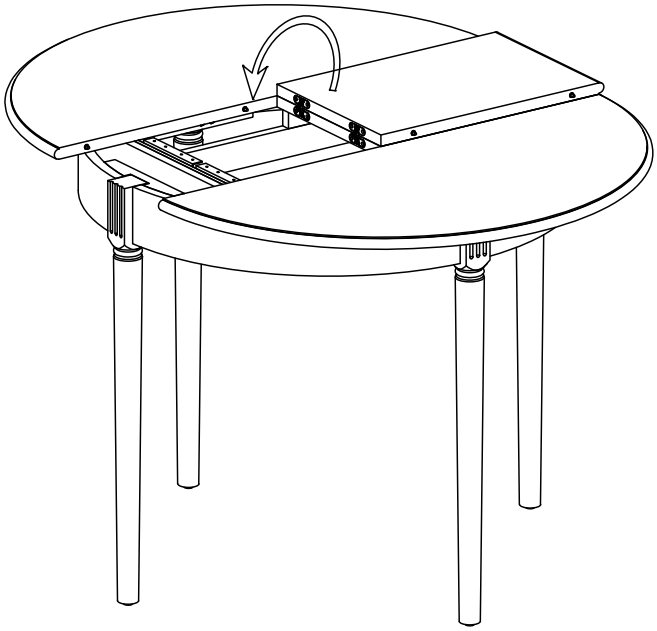

Extend or close the tabletop

06 Complete the extension

Push the main tabletop sections inward in the directions of the arrows. The extended tabletop is now complete.

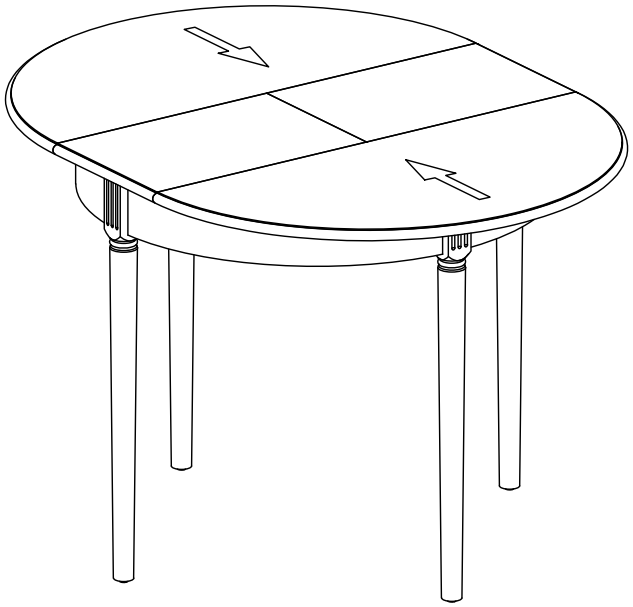

07 Close the tabletop

Reverse the extension steps to return the tabletop to its closed position.

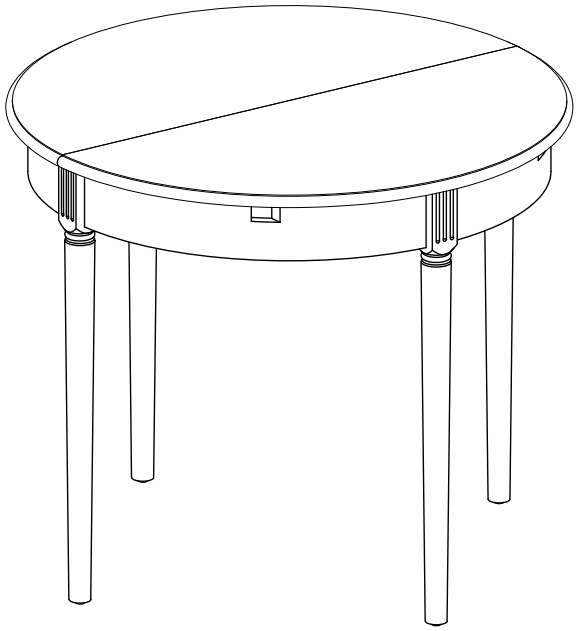

Using the slide locking lever

Note 1

The slide locking lever is supplied in the open position, allowing you to extend or retract the tabletop as needed.

Open the lever on the slide before extending or retracting the tabletop.

When the extension function is not in use, the lever can be closed.

Locking lever closed

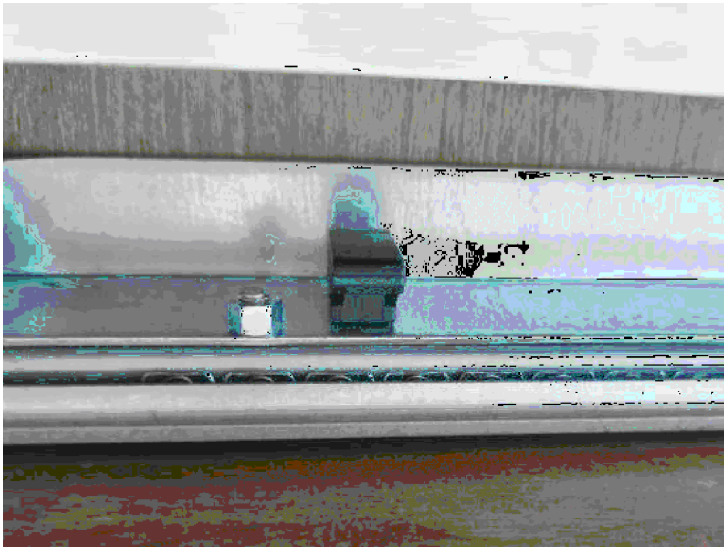

Locking lever open

