ASSEMBLY INSTRUCTION

PATIO FURNITURE SETS

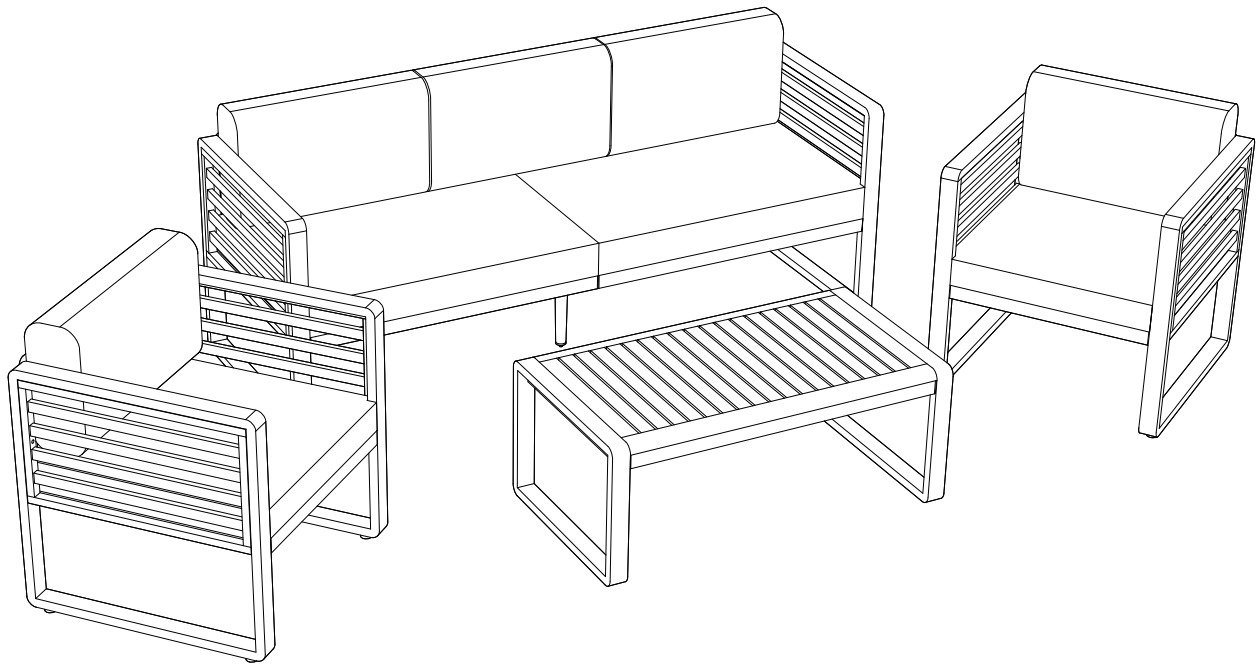

Notice:

1. **50% Tighten before fixing all screws, Allen wrench is recommended instead of an electric drill.**
2. **Place the item on a flat ground to adjust and make sure it remains stable.**
3. **Tighten up all screws with tools gradually.**
4. **If the screws are not aligned with holes during assembly, please loosen all the other screws to 50% and continue the assembly process.**
5. **If the item is not stable, please loosen all the screws, adjust it on a flat ground and tighten up all screws again.**
6. **Note : If one or some screws are fully tightened during assembly, chances are the others will not be aligned with holes. In addition, all the holes are designed to be relatively larger to provide more space for the adjustment of the screws.**

x1

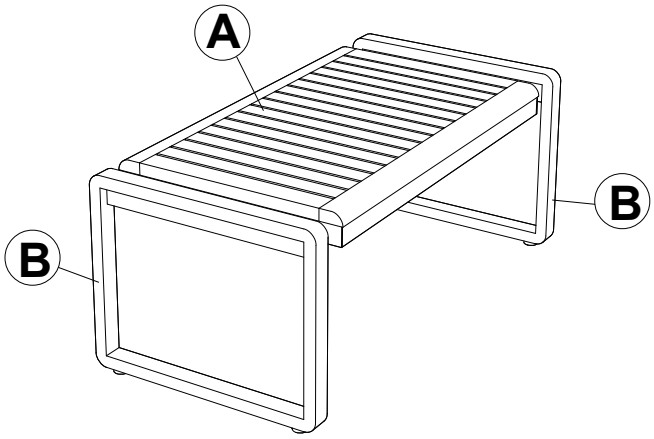

x2

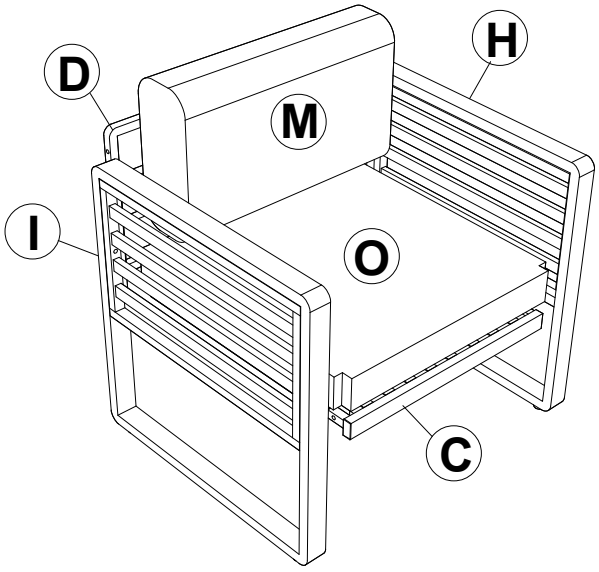

x1

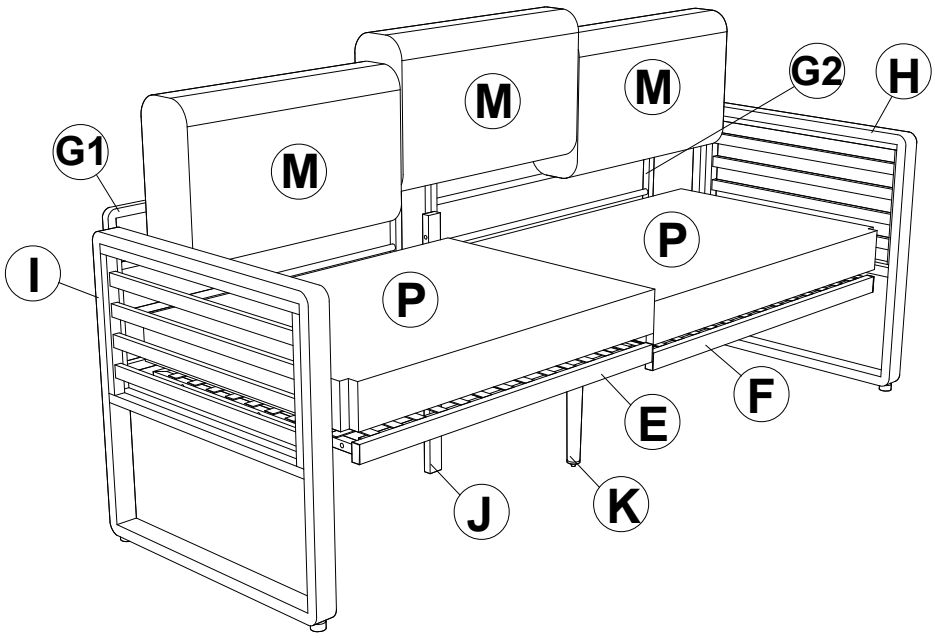

Part List :

A

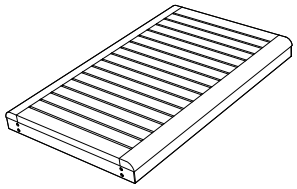

Top Table (1 pc)

B

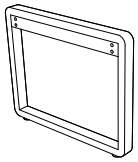

Leg Table (2 pcs)

C

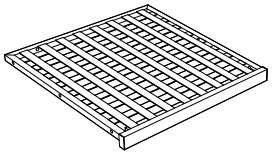

Seat Chair Frame (2 pcs)

D

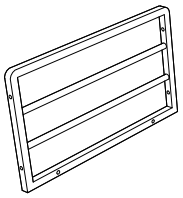

Back Chair Frame (2 pcs)

E

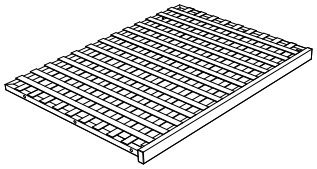

Left Seat Bench (1 pc)

F

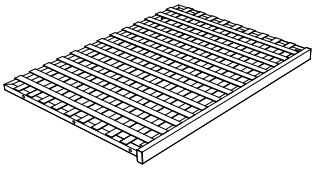

Right Seat Bench (1 pc)

G1

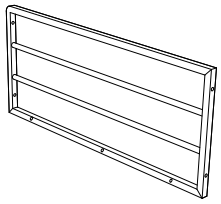

Right Back Bench (1 pc)

G2

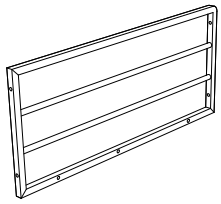

Left Back Bench (1 pc)

H

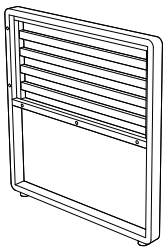

Left Armless (3 pcs)

I

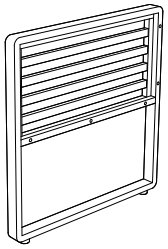

Right Armless (3 pcs)

J

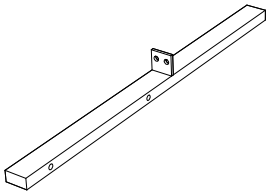

Back Support Leg (1 pc)

K



Middle Support Leg(1 pc)

M

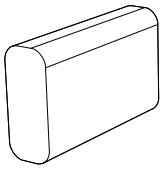

Back Cushion (5 pcs)

O

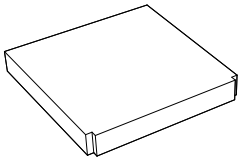

Seat Chair Cushion (2 pcs)

P

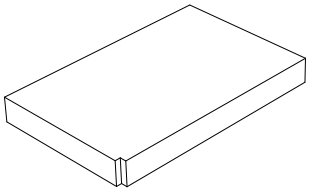

Seat Bench Cushion (2 pcs)

Hardware :

1

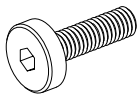

Extra (2 pcs)
Bolt M6x20 (14 pcs)

2

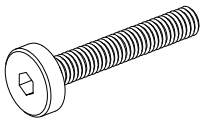

Extra (3 pcs)
Bolt M6x35 (44 pcs)

3

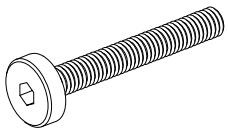

Extra (1 pc)
Bolt M6x60 (3 pcs)

4

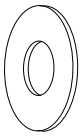

Extra (4 pcs)
Flat Washer M6 (64 pcs)

5

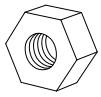

Extra (1 pc)
Nut M6 (3 pcs)

6

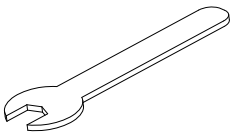

Key (1 pc)

7

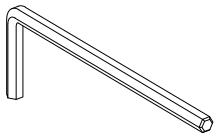

Allen Key (2 pcs)

8

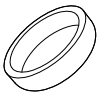

Extra (2 pcs)
Plastic Bolt Cover (16 pcs)

CARTON CONTENT:

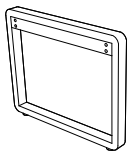

B x2

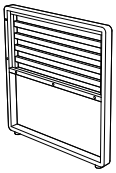

I x3

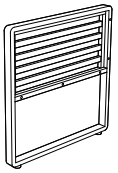

H x3

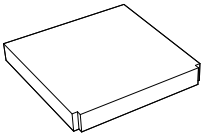

O x2

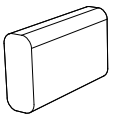

M x2

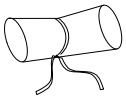

Hardware

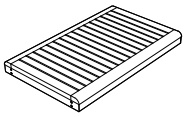

A x1

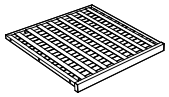

C x2

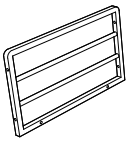

D x2

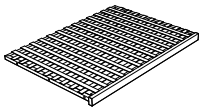

E x1

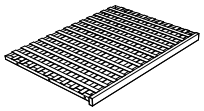

F x1

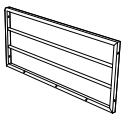

G1 x1



G2 x1

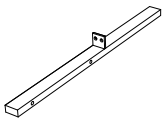

J x1



K x1

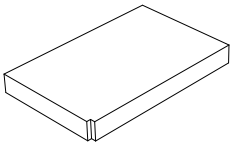

P x2

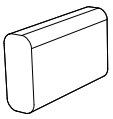

M x3

STEP 1

A x1

B x2

① x8

④ x8



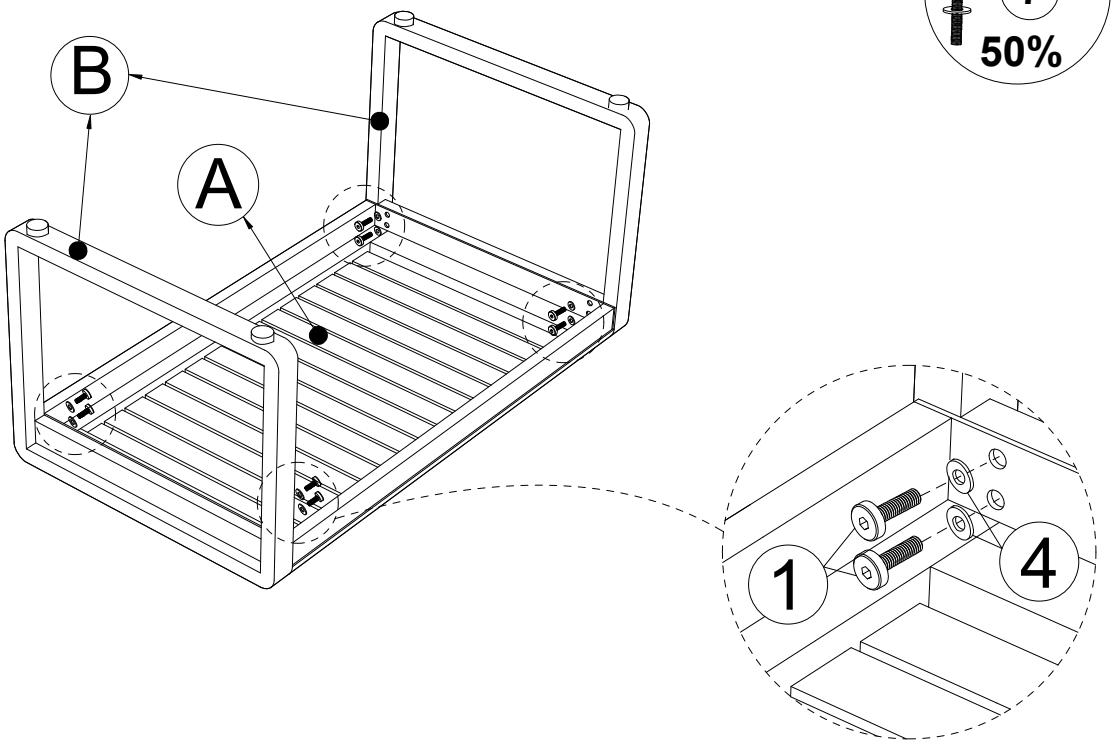

Connect Leg Table (B) & Top Table (A), tighten Bolt (1) & flat washer (4) with Allen Key (7).

STEP 2



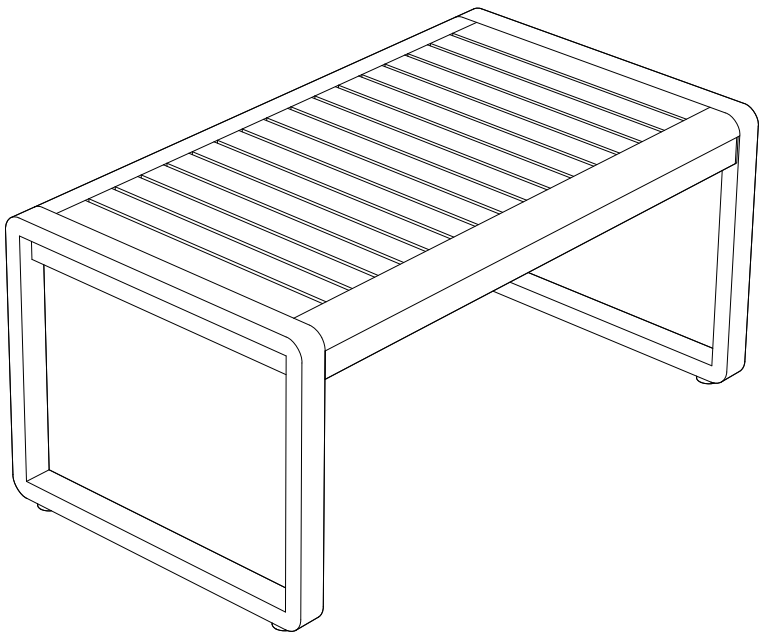

Put The table upright, then firmly tighten Bolts with Allen Key (7) to finish Table.

STEP 3

C x1
H x1
2 x3
4 x3

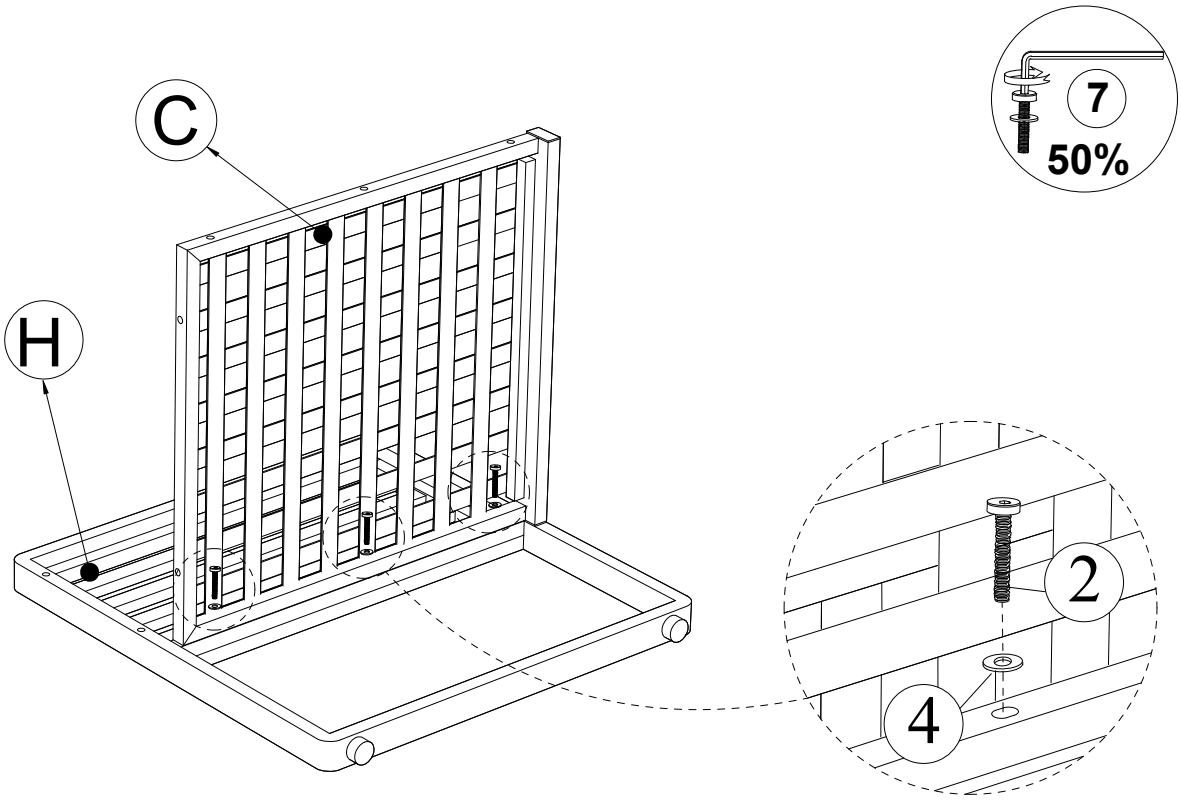

x2

Connect Seat Chair Frame (C) & Left Armless (H), tighten Bolt (2) & Flat Washer (4) & Allen Key (7).

STEP 4

D x1
2 x4
4 x4

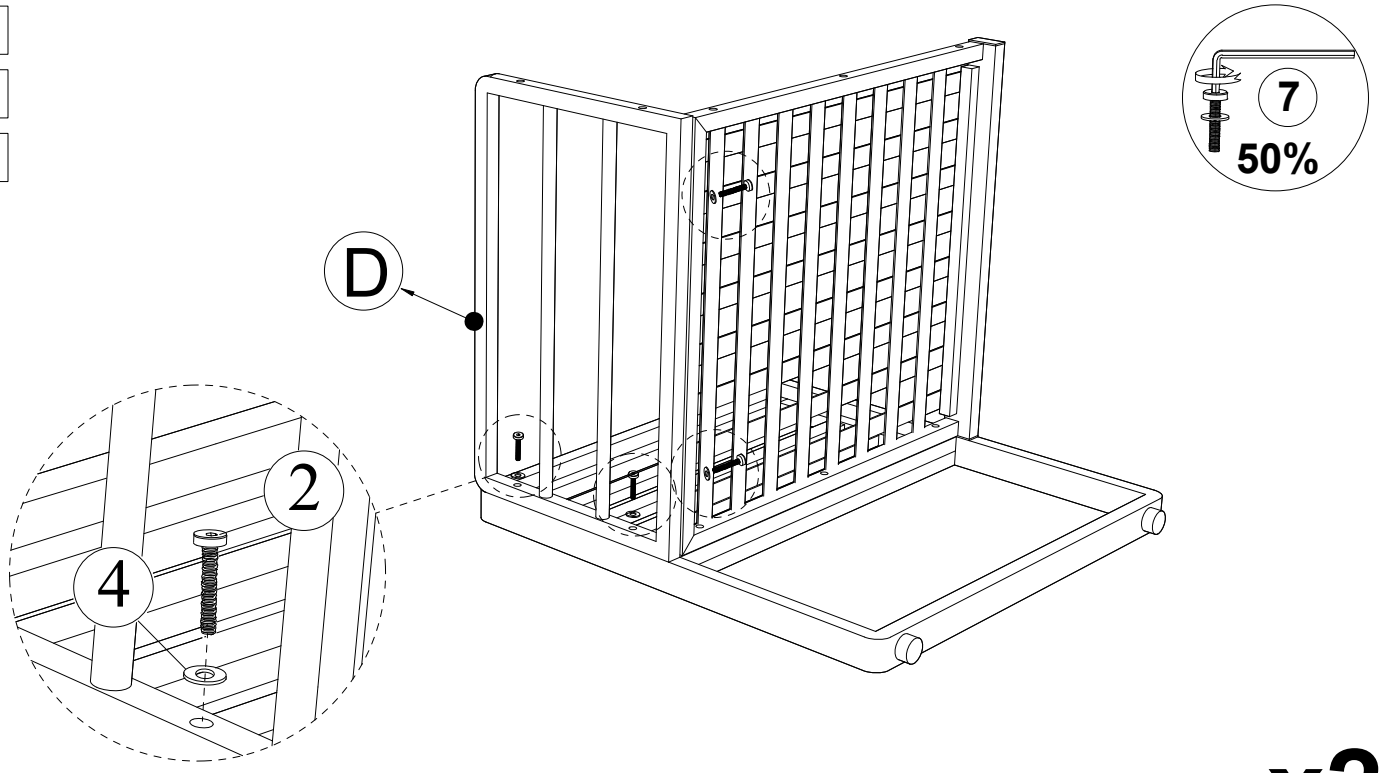

x2

Connect The part from Step 3 & Back Chair Frame (D), tighten Bolt (2) & Flat Washer (4) with Allen Key (7).

STEP 5

I x1
② x5
④ x5

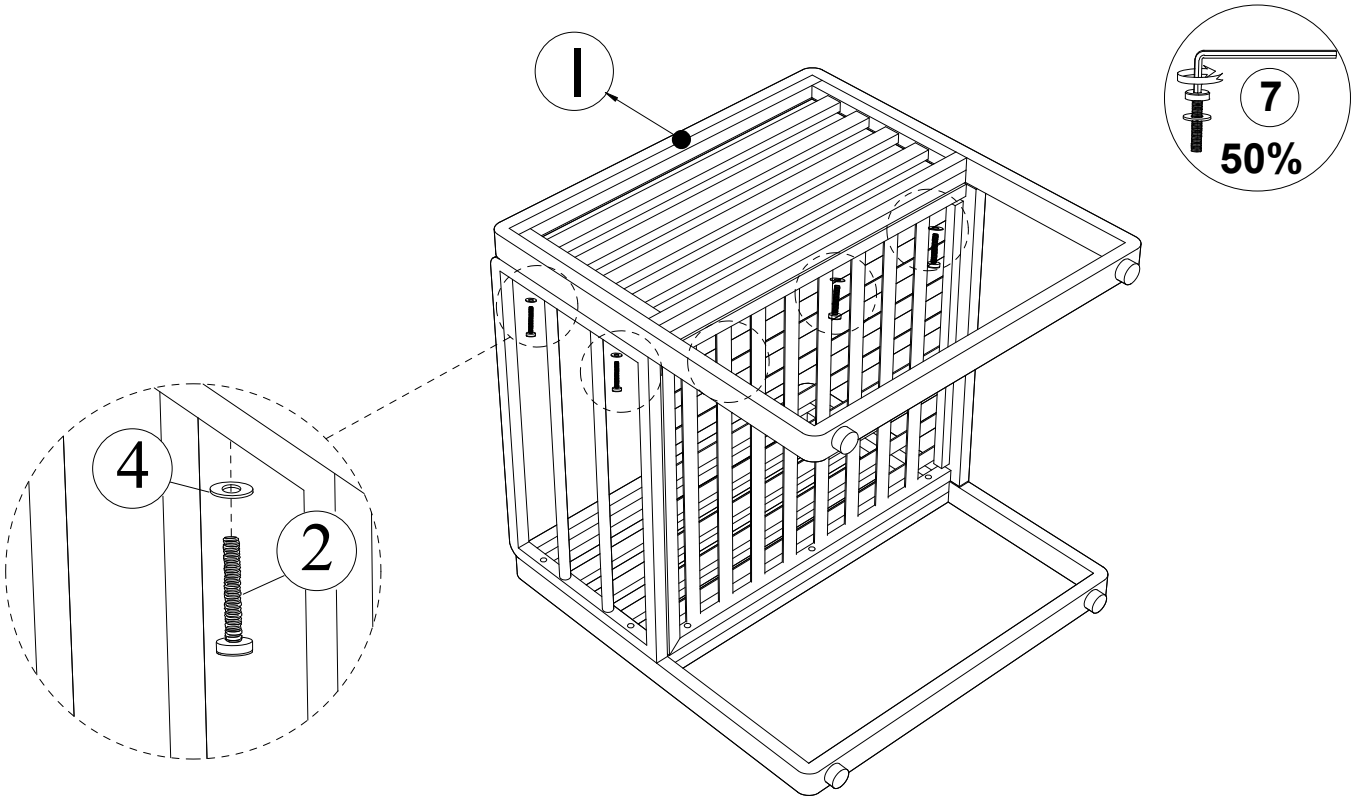

x2

Connect The part from Step 4 & Right Armless (I), tighten Bolt (2) & Flat Washer (4) & Allen Key (7).

STEP 6

⑧ x4

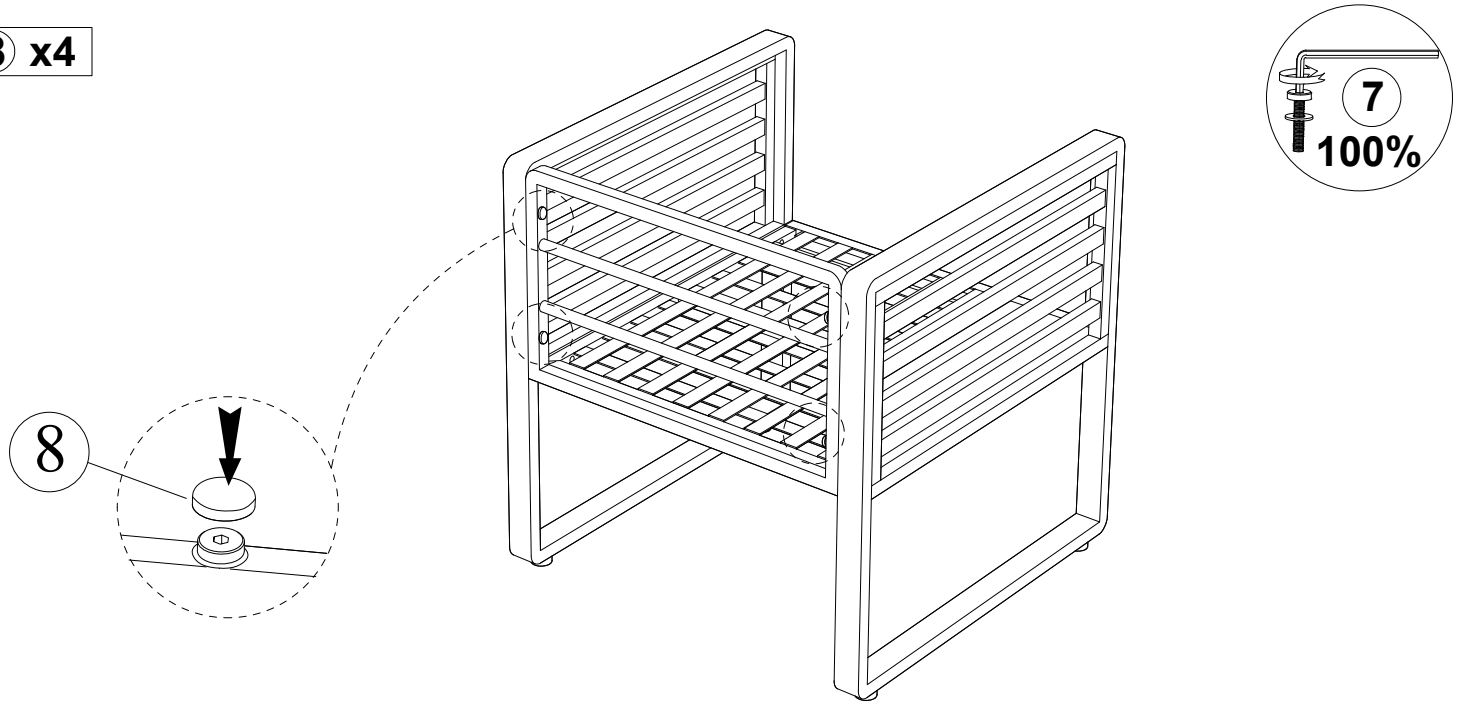

x2

Put the Chair upright, firmly tighten Bolts with Allen Key (7), push Plastic Cover (8)

STEP 7

M x1

O x1

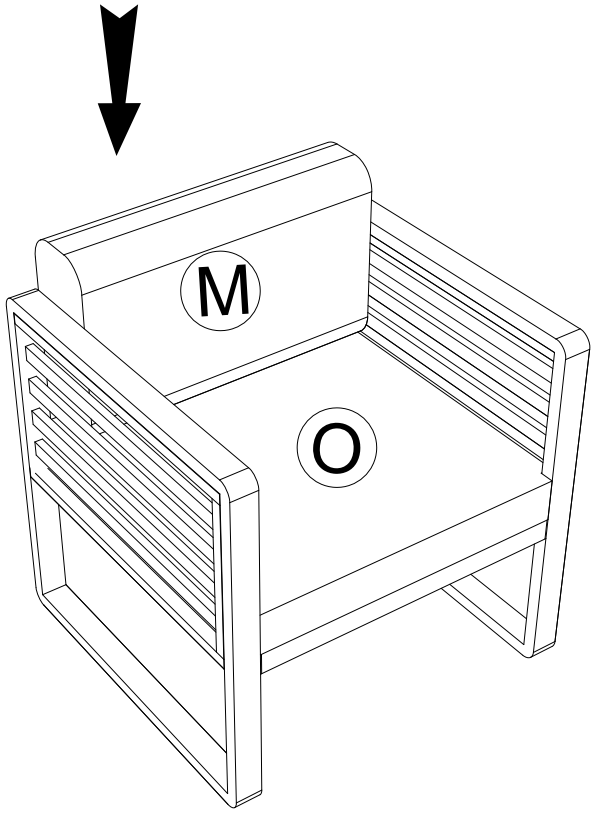

x2

Open all the vacuum bags, adjust the cushions. Set up the Cushions (M) + (O) to finish Chair.

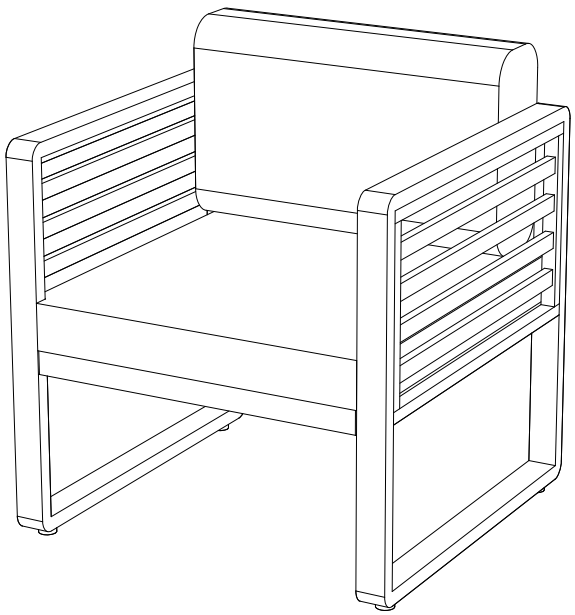

x2

Finish Chair.

STEP 8

G1 x1

G2 x1

J x1

② x4

④ x4

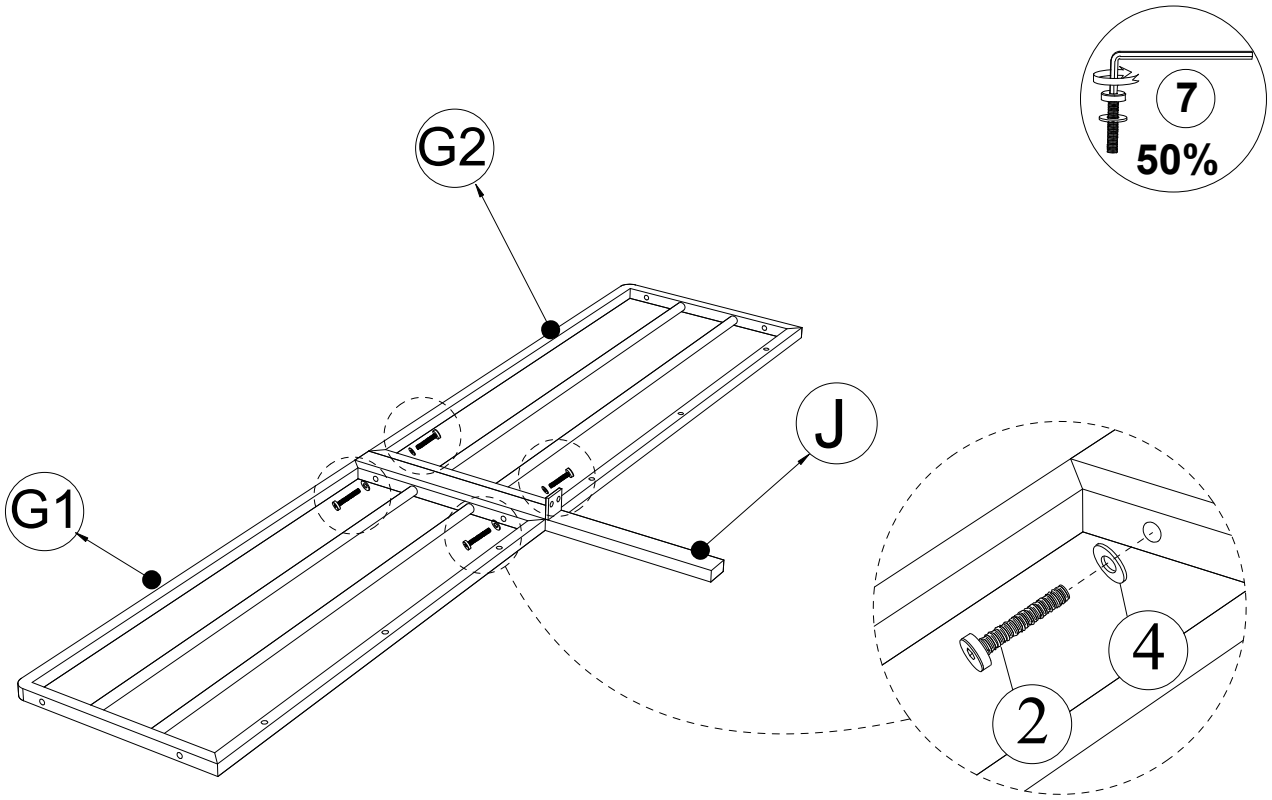

Connect Back Bench Frames (G1) & (G2) & Back Support Leg (J), tighten Bolt (2) & Flat Washer (4) & Allen Key (7).

STEP 9

E x1

F x1

③ x3

⑤ x3

④ x6

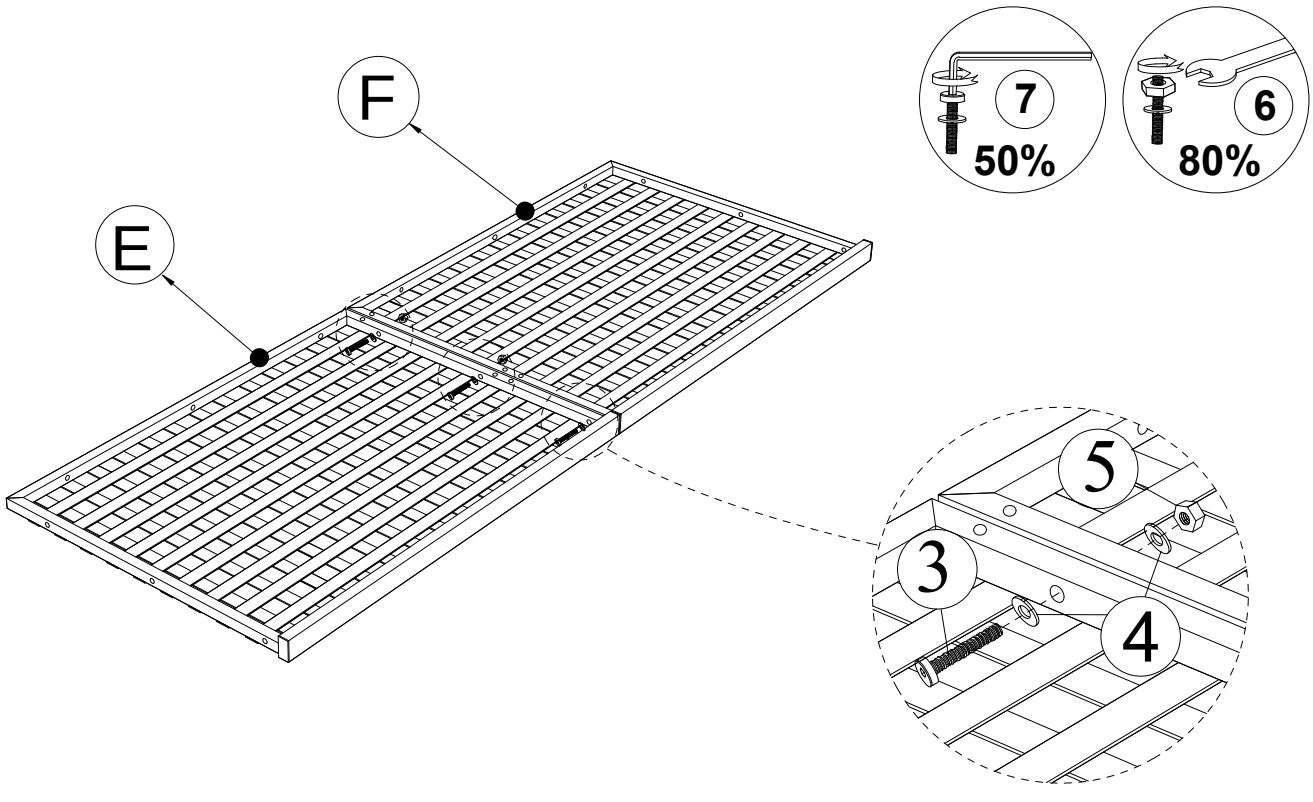

Connect Left Seat Bench (E) & Right Seat Bench (F), tighten Bolt (3) & Flat Washer (4) & Nut (5) with Allen Key (7) & Key (6)

STEP 10

H x1

② x3

④ x3

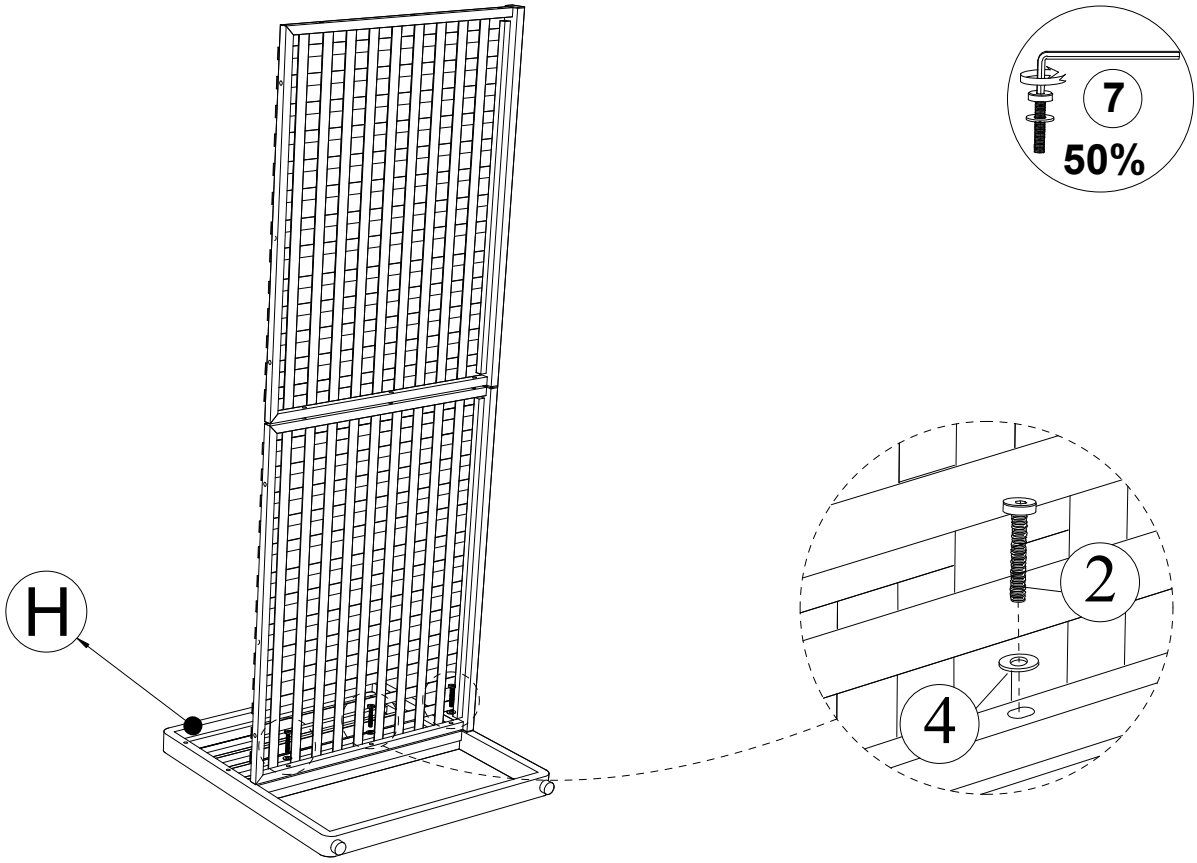

Connect The part from Step 9 & Left Armless (H), tighten Bolt (2) & Flat Washer (4) & Allen Key (7).

STEP 11

② x8

④ x8

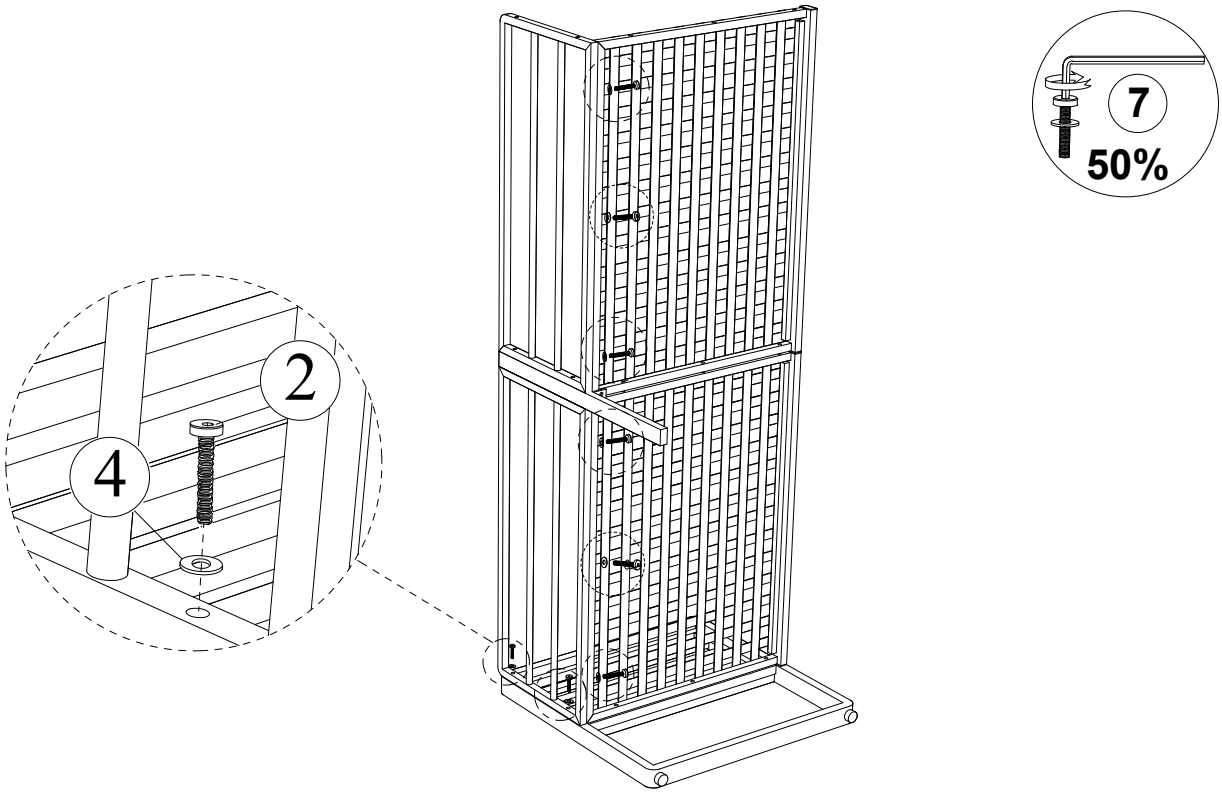

Connect The part from Step 10 & The part from Step 8, tighten Bolt (2) & Flat Washer (4) & Allen Key (7).

STEP 12

K x1
1 x6
4 x6

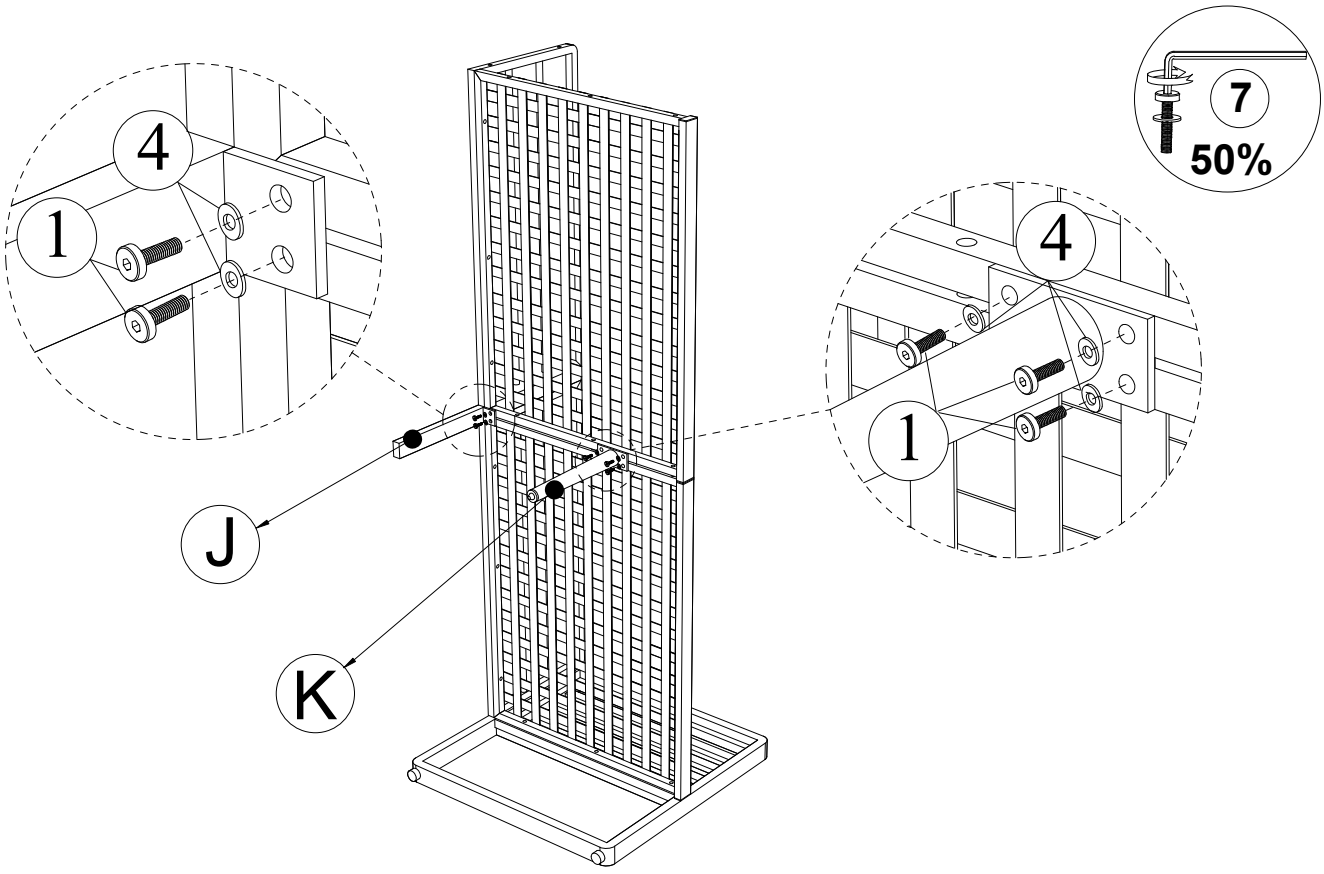

Connect The part from Step 11, Back Support Leg (J), Middle Support Leg (K), tighten Bolt (1) & Flat Washer (4) & Allen Key (7).

STEP 13

I x1
2 x5
4 x5

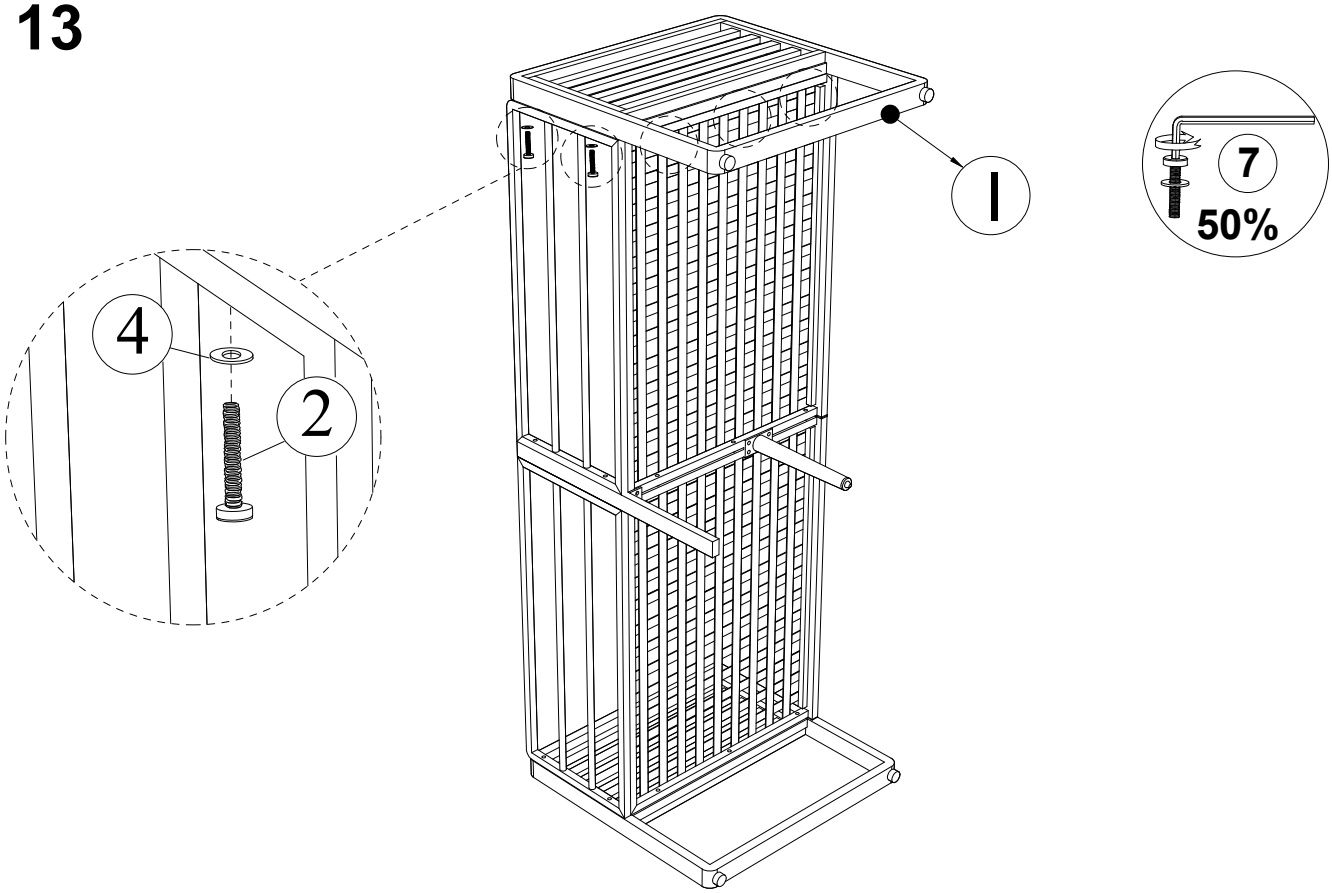

Connect The part from Step 12 & Right Armless (I), tighten Bolt (2) & Flat Washer (4) & Allen Key (7).

STEP 14

⑧ x8

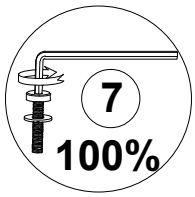

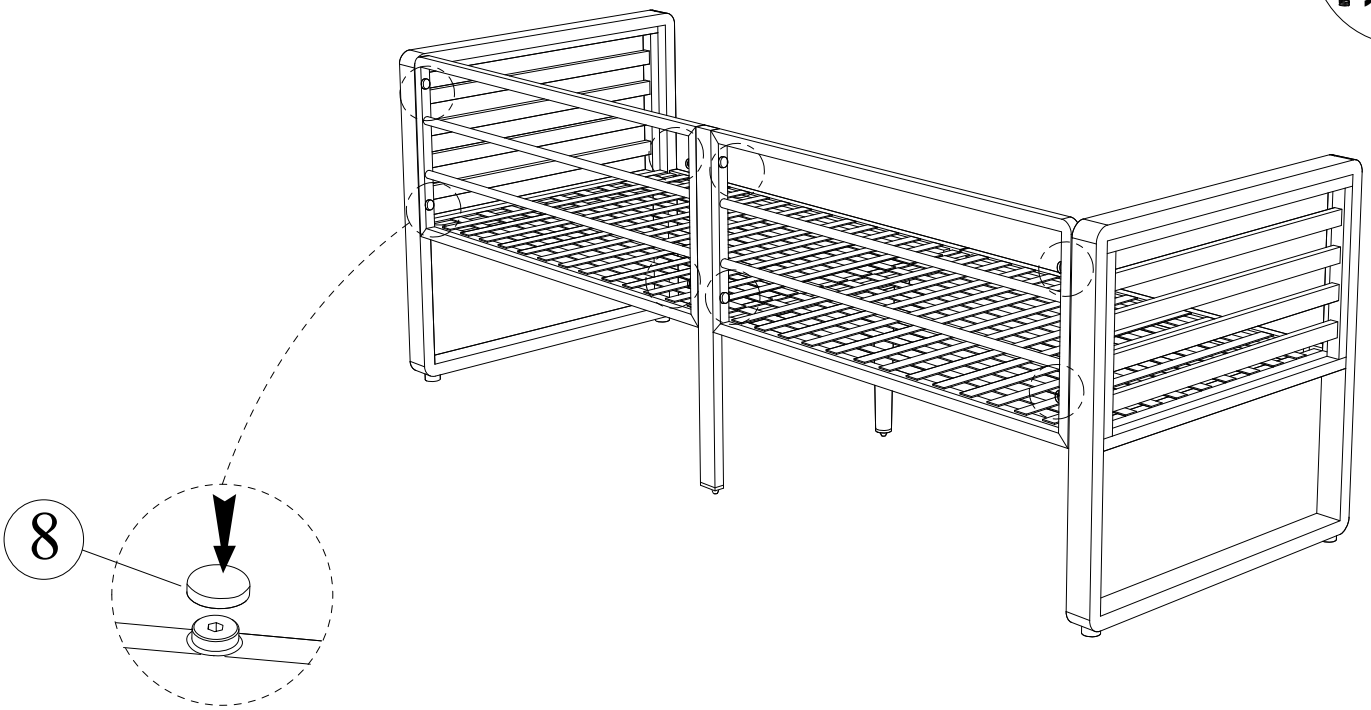

Put the Bench upright, firmly tighten Bolts with Allen Key (7), push Plastic Cover (8)

STEP 15

M x3

P x2



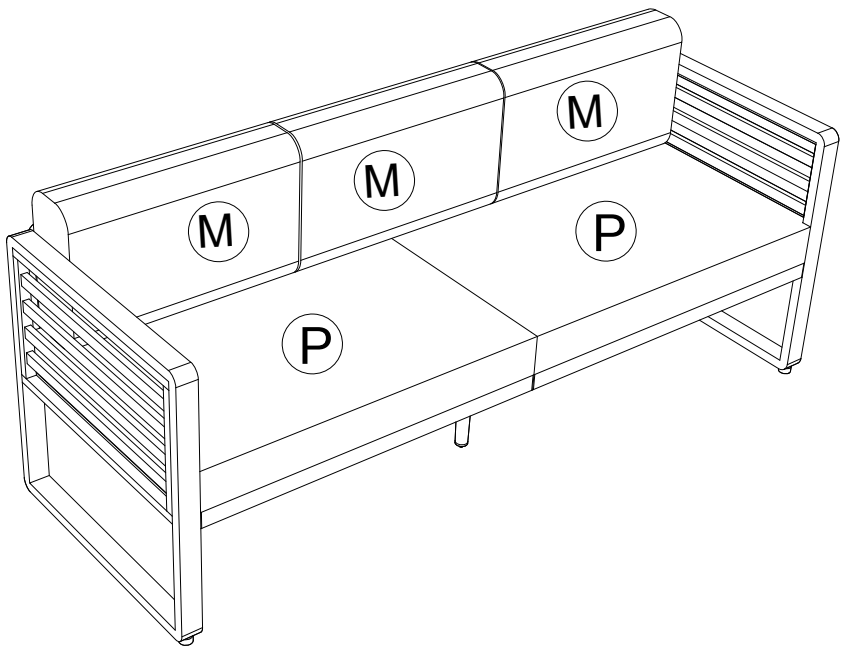

Open all the vacuum bags, adjust the cushions .Set up the Cushions (M)+(P) to finish Bench.

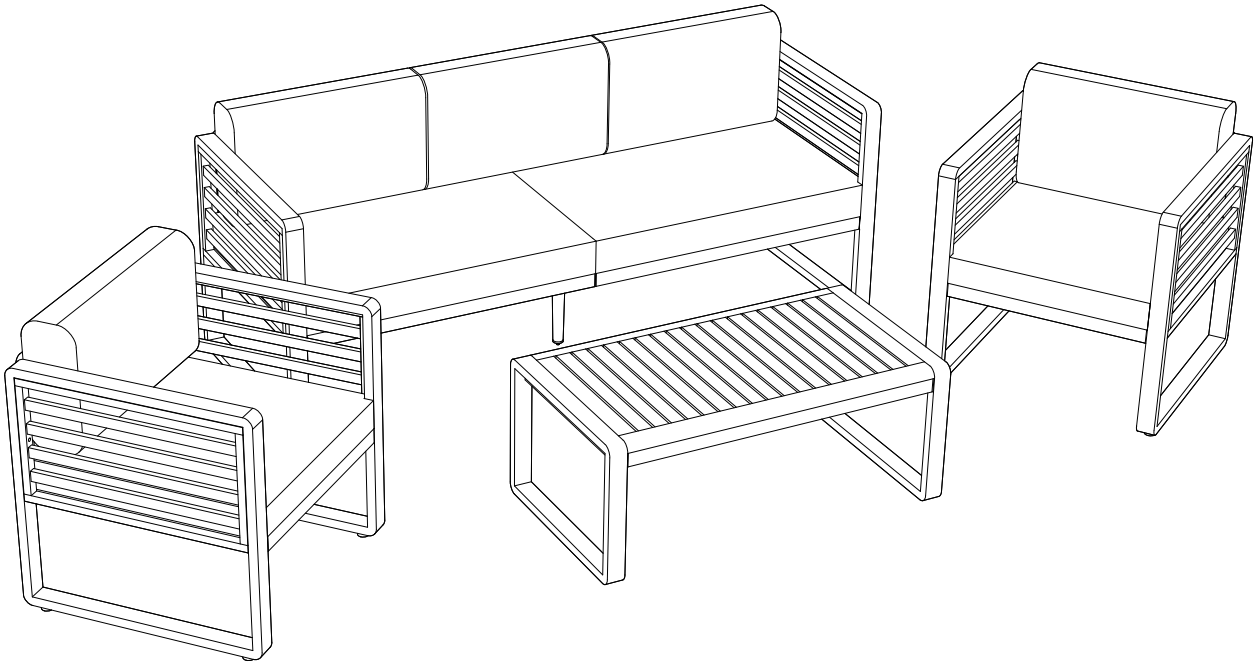

Finish.