GOOD HOUSEKEEPING

Sydney

Bath Ventilator with Light
Owner's Manual

42106-01
R20240201

Models
91023/91024/91025

⚠ WARNING

TO REDUCE THE RISK OF FIRE, ELECTRIC SHOCK, OR INJURY TO PERSONS, OBSERVE THE FOLLOWING:

1. Use this unit only in a manner intended by the manufacturer. If you have questions, contact the manufacturer.
2. Before servicing or cleaning the unit, switch power off at service panel and lock the service disconnecting means to prevent power from being switched on accidentally. When the service disconnecting means cannot be locked, securely fasten a prominent warning device, such as a tag, to the service panel.
3. Installation work and electrical wiring must be done by qualified person(s) in accordance with all applicable codes and standards, including fire-rated construction.
4. Sufficient air is needed for proper combustion and exhausting of gasses through the flue (chimney) of fuel burning equipment to prevent backdrafting. Follow the heating equipment manufacturer's guideline and safety standards, such as those published by the National Fire Prevention Association (NFPA), and the American Society for Heating, Refrigeration and Air-Conditioning Engineers (ASHRAE), and the local code authorities.
5. When cutting or drilling into wall(s) or ceiling, do not damage electrical wiring or other hidden utilities.
6. Ducted fans must always be vented to the outdoors.
7. If this unit is to be installed over a tub or shower, it must be marked as appropriate for the application and be connected to a GFCI (Ground Fault Circuit Interrupter) - protection branch circuit.
8. Never place a switch where it can be reached from a tub or shower.
9. Install fan at least 7 feet (2.1 m) above the floor
10. This unit must be grounded.
11. Unit must not be installed in a ceiling thermally insulated to a value greater than R40.
12. Acceptable for use over a bathtub or shower when installed in a GFCI protected branch circuit.

⚠ CAUTION

1. For general ventilating use only. Do not use to exhaust hazardous or explosive materials and vapors.
2. To avoid motor bearing damage and noisy/unbalanced impellers, keep drywall spray, construction dust, etc. off power unit.
3. DO NOT install this product in a wall. This product is designed for installation in ceilings up to a 12/12 pitch (45 degrees). Ductwork must point upward.
4. Please read specification label on product for further information and requirements.

⚠ WARNING

DISCONNECT ELECTRIC POWER SUPPLY AND LOCK OUT SERVICE PANEL BEFORE SERVICING UNIT

PREVENTATIVE MAINTENANCE

A clean fan provides better service. Disconnect the power supply and clean the fan as listed below.

TO CLEAN GRILL: Use a mild detergent, such as dishwashing liquid, and a soft cloth. DO NOT use abrasive cloths, steel wool pads or scouring powders.

TO CLEAN FAN ASSEMBLY: Gently vacuum fan, motor and interior of housing. METAL AND ELECTRICAL PARTS SHOULD NEVER BE IMMERSED IN WATER.

MAINTENANCE

The motor is permanently lubricated and never needs oiling. If the motor bearings are making excessive or unusual noises, replace the motor with the exact service motor. You should replace the impeller at the same time.

COOKING AREA

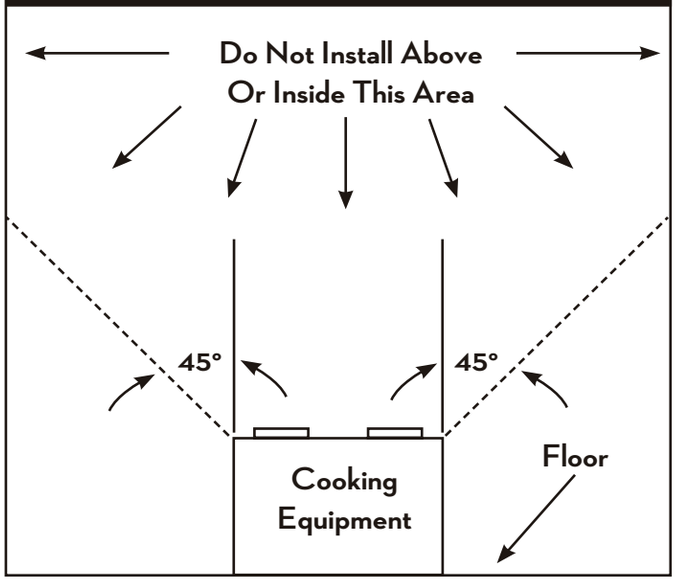

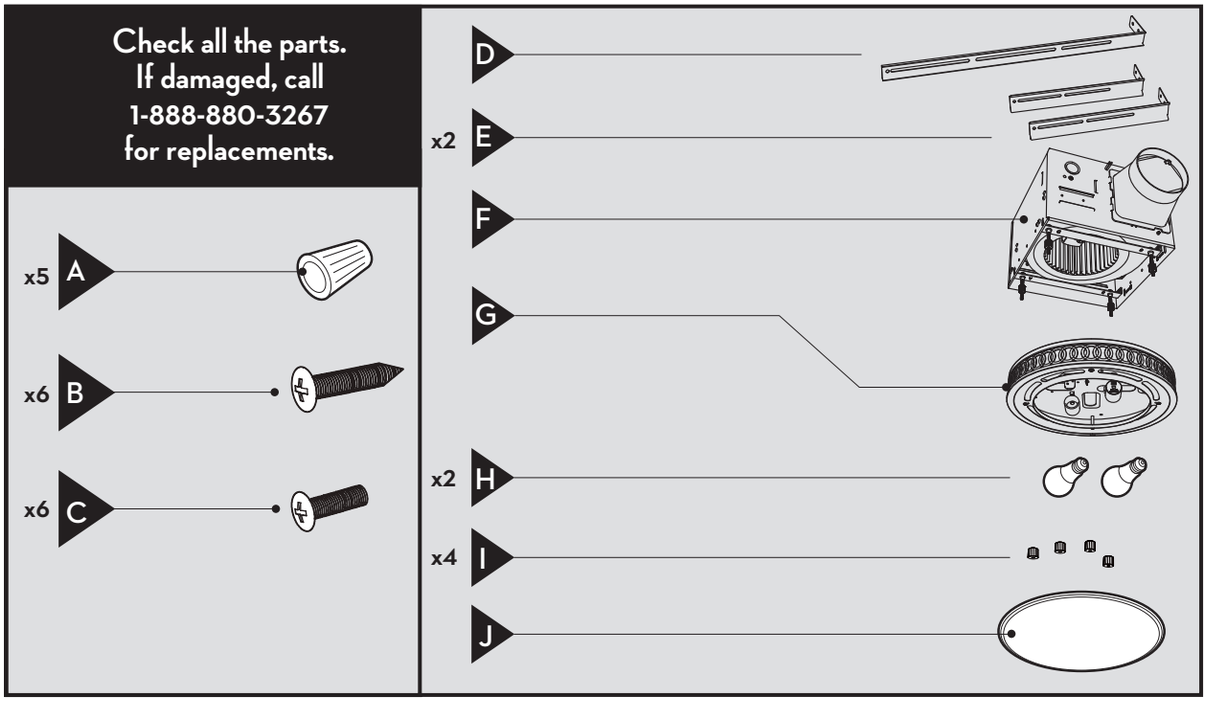

Included

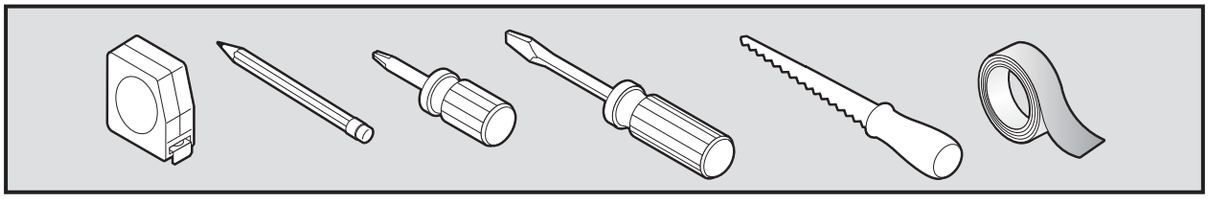

Tools Needed. (Not supplied.)

Estimated assembly time: 30 to 60 minutes.

Before Installation

NOTE: Remove all packing materials before installation.

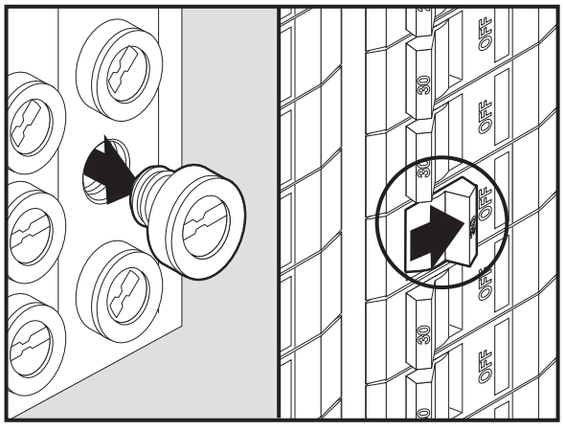

Turn off the power source.

Choose Installation Option

For New Construction - attaching to joist go to step A1, page 4
For New Construction - suspended between joists go to step B1, page 6
For Existing Construction - accessible from above go to step C1, page 8
For Existing Construction - accessible only from below go to step D1, page 11
Note this item is rated for installation in insulated spaces.

New Construction - attaching to joist

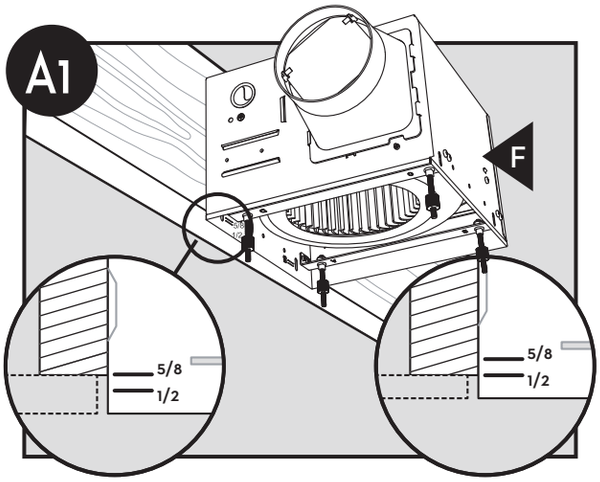

Position the correct depth mark at the bottom edge of the joist based on the thickness of your sheetrock.

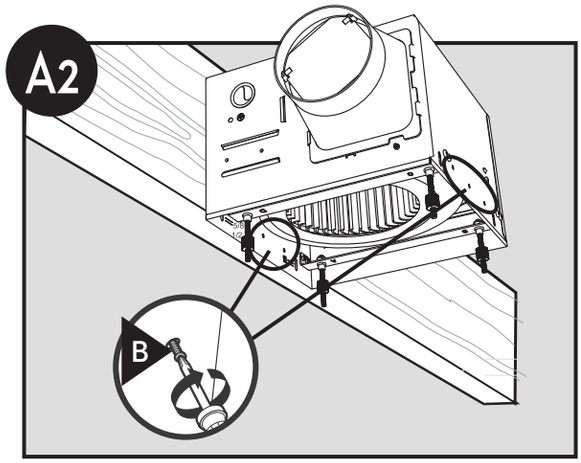

Screw six (6) long wood screws into joist or framing.

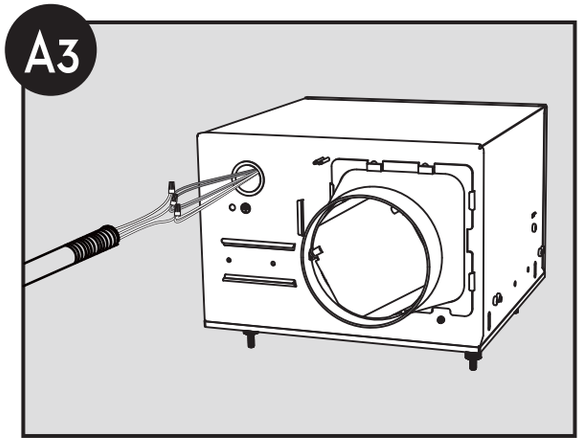

Connect to the supply wires. For supply connection, use wires suitable for at least 194° F.

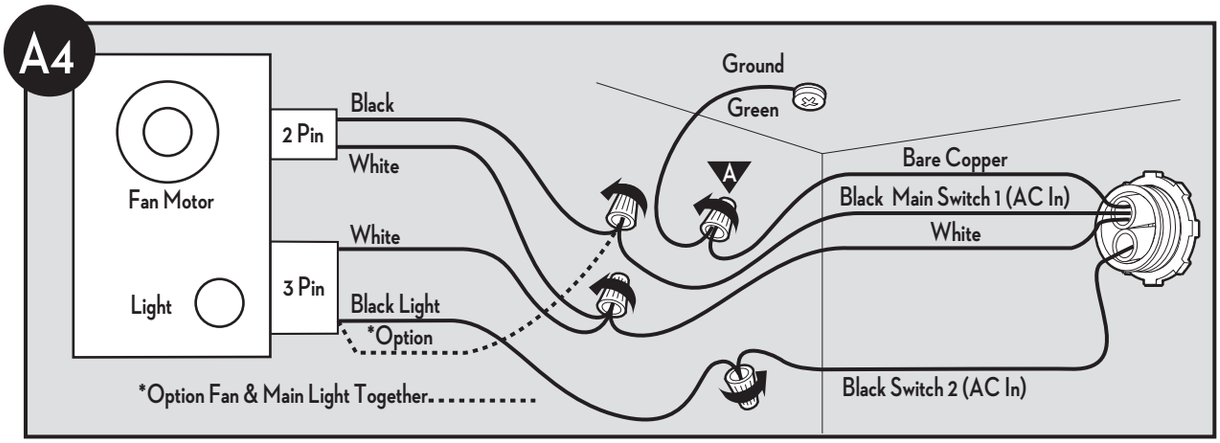

Connect wires as shown.

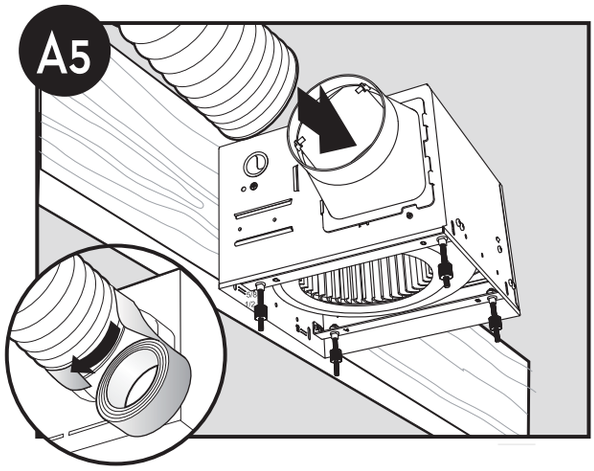

Connect 4" duct and vent to the outside. Tape joints. If ducting does not fit securely, an adapter may need to be purchased.

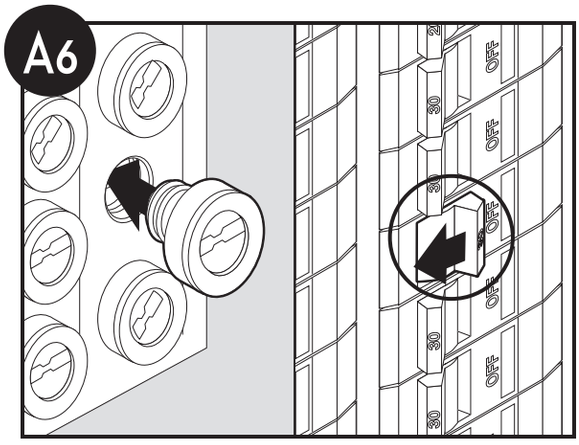

Turn on the power source.

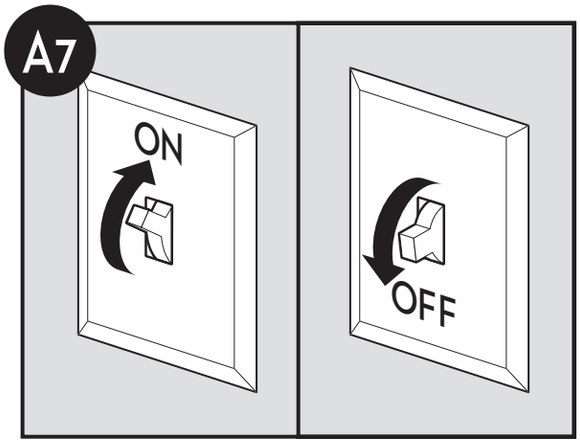

Test the motor. If the motor does not run, check the plug connection.

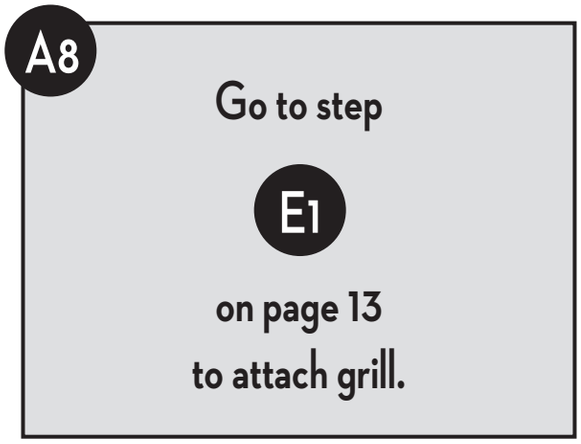

New Construction – suspended between joists

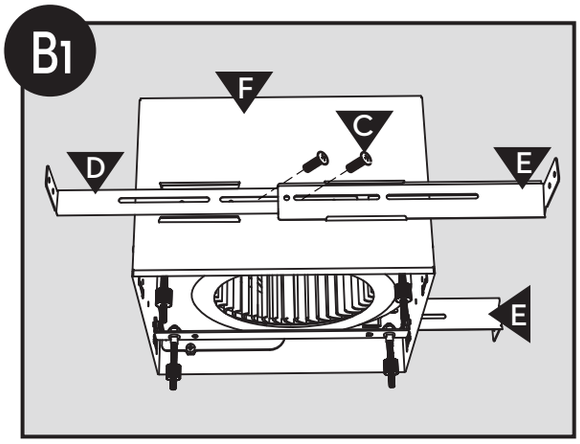

Slide the mounting rails into the side brackets and tighten with the machine screws.

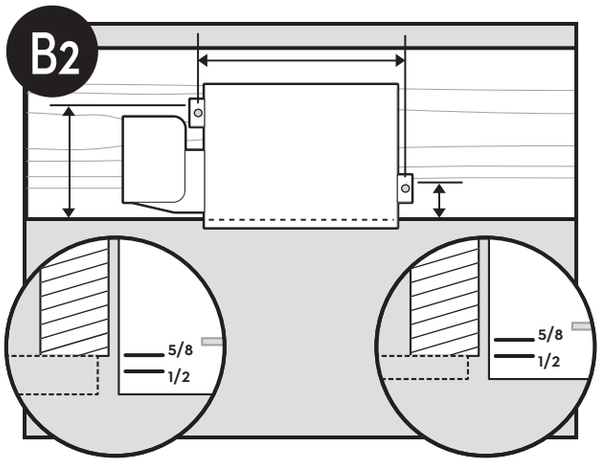

Position the correct depth mark at the bottom edge of the joist based on the thickness of your sheetrock.

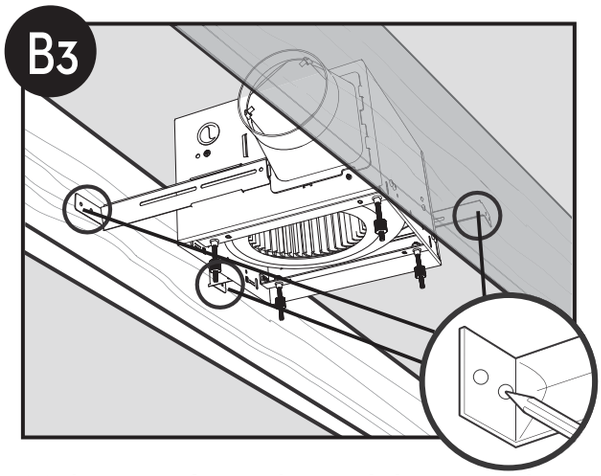

Mark position of screws by using holes as a template.

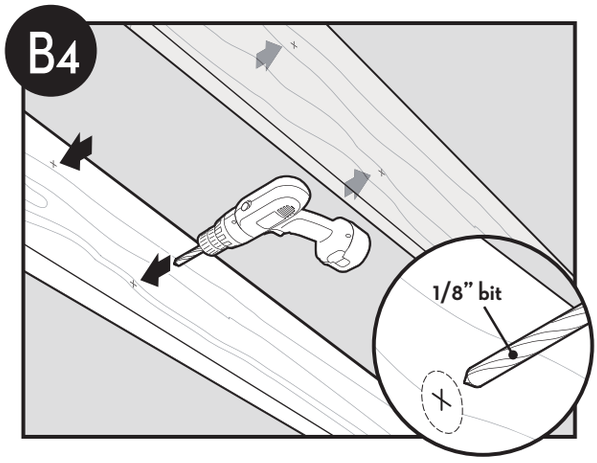

Drill a hole in the center of each outline.

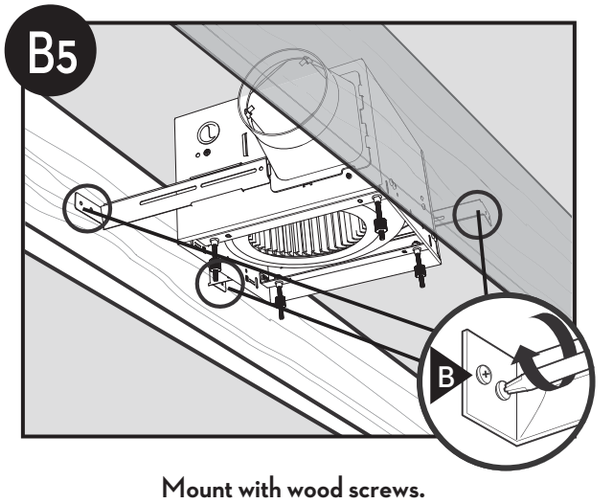

Mount with wood screws.

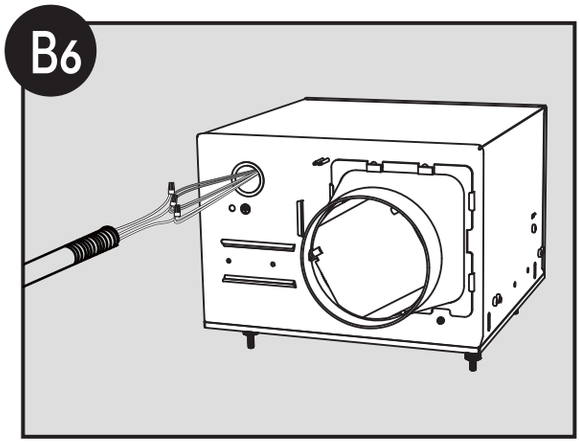

Connect to the supply wires. For supply connection, use wires suitable for at least 194° F.

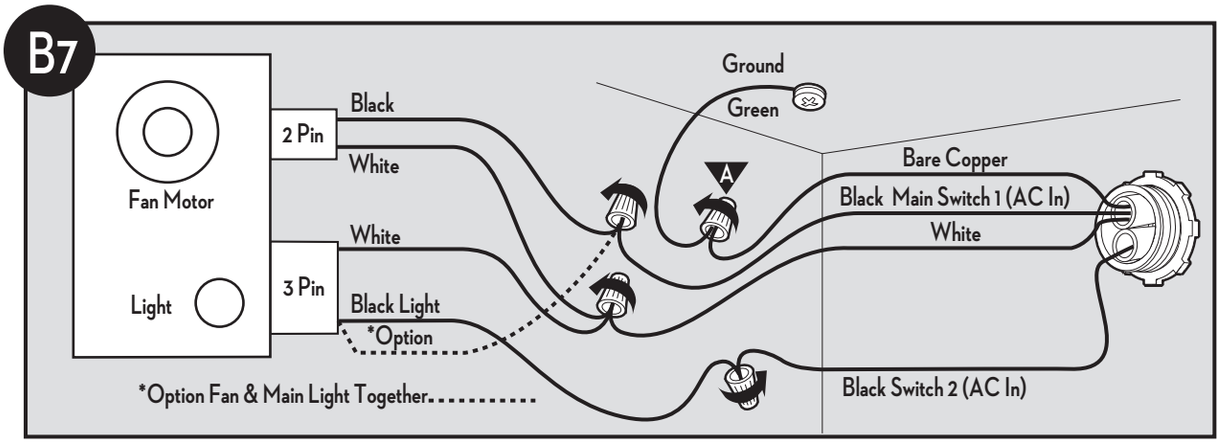

Connect wires as shown.

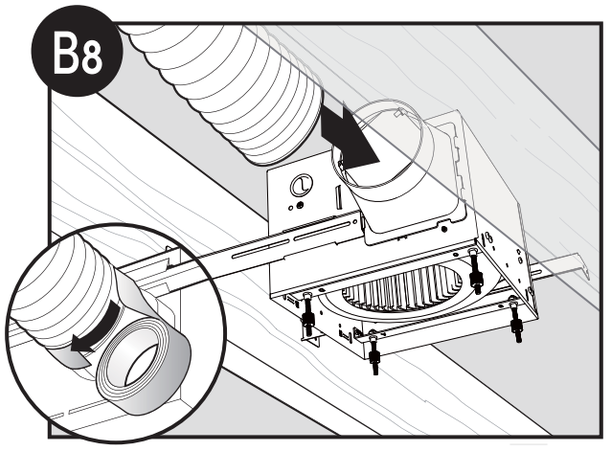

Connect 4" duct and vent to the outside. Tape joints. If ducting does not fit securely, an adapter may need to be purchased.

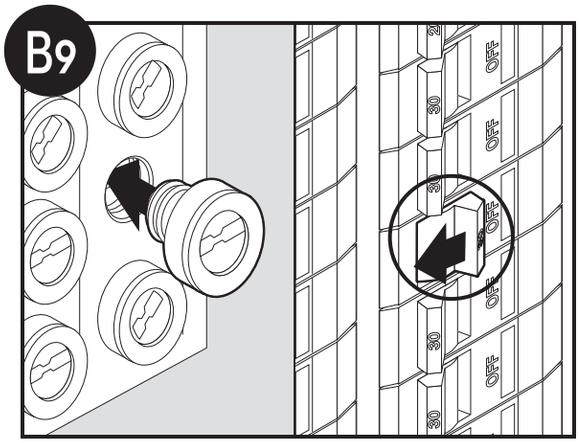

Turn on the power source.

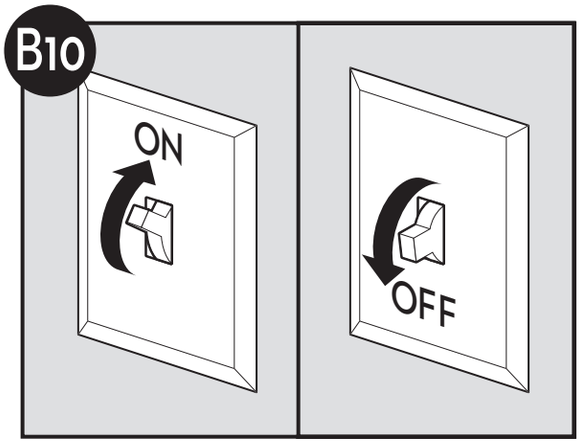

Test the motor. If the motor does not run, check the plug connection.

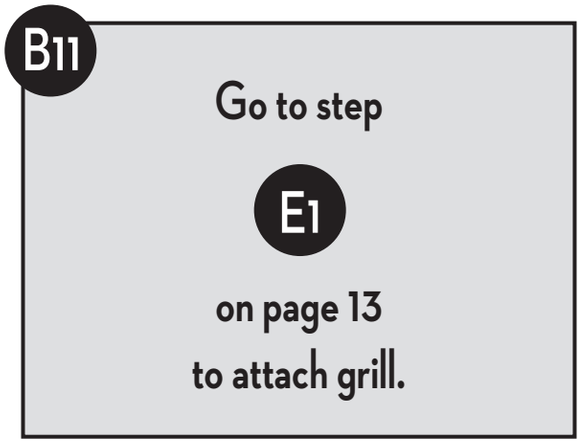

Existing Construction – accessible from above

C1

EXISTING FAN

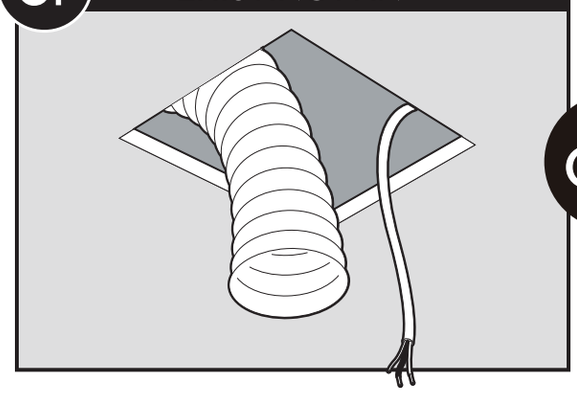

Remove an existing fan and check to make sure the opening is large enough to accommodate the new motor housing (9.75"x 9.75").

OR

NO EXISTING FAN

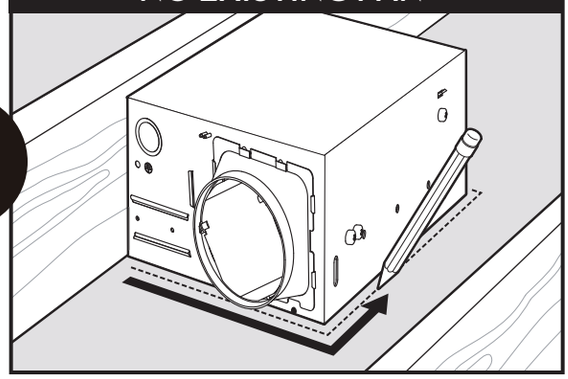

Use the motor housing as a template to mark position.

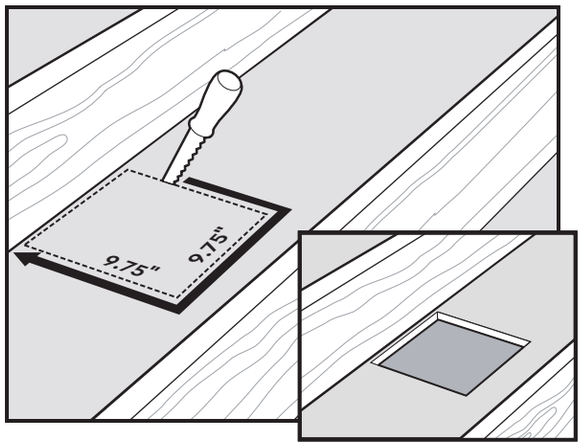

Cut out an opening for the housing.

C2

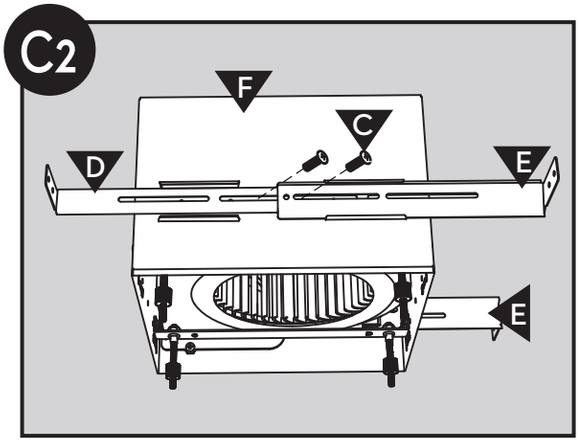

Slide the mounting rails into the side brackets and tighten with machine screws.

C3

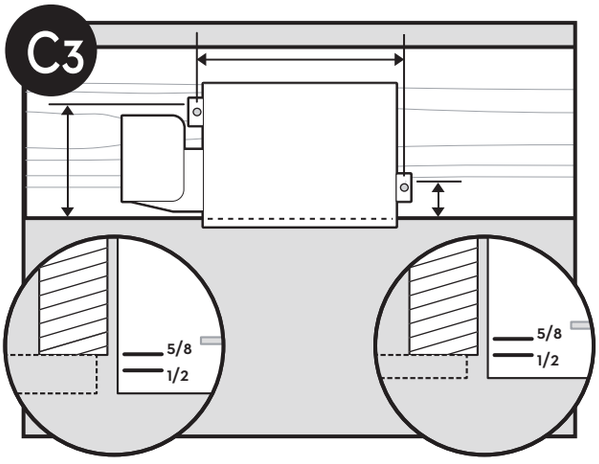

Position the correct depth mark at the bottom edge of the joist based on the thickness of your sheetrock.

C4

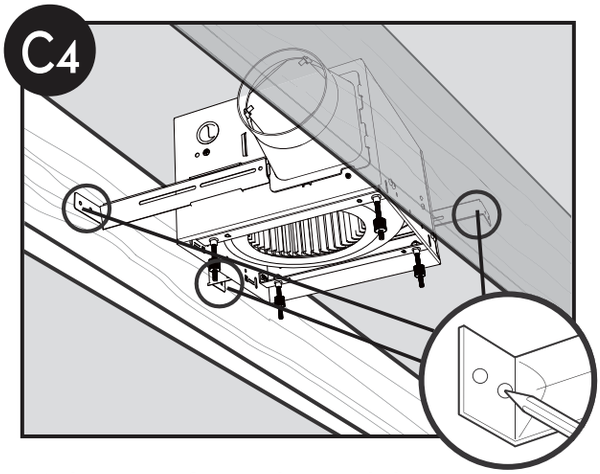

Mark position of screws by using holes as a template.

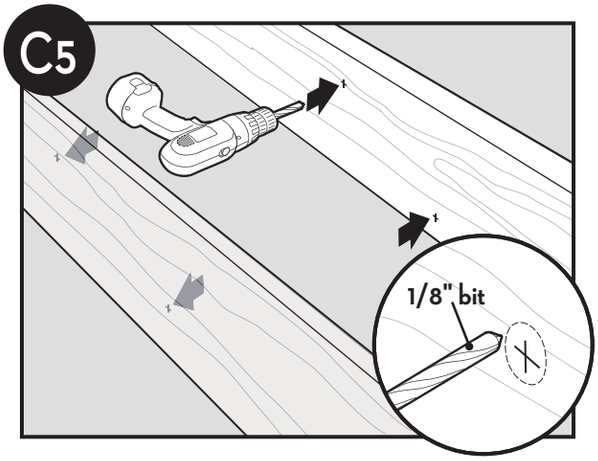

Drill a hole in the center of each outline.

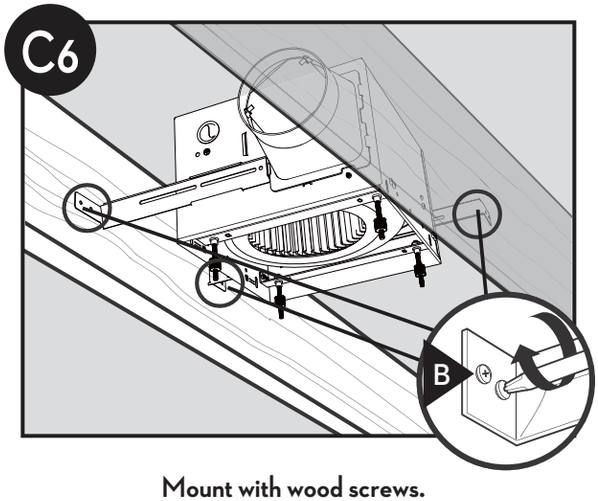

Mount with wood screws.

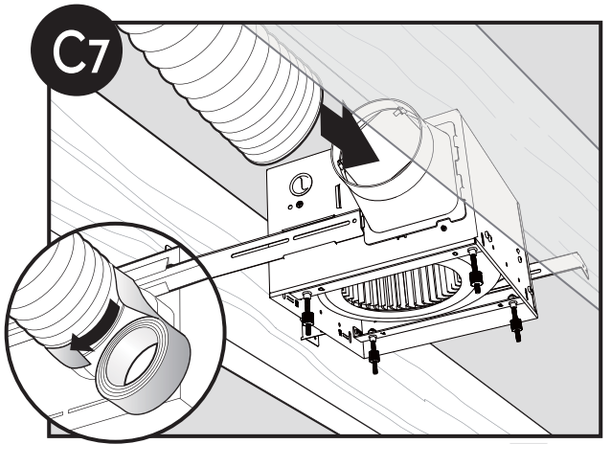

Connect 4" duct and vent to the outside. Tape joints. If ducting does not fit securely, an adapter may need to be purchased.

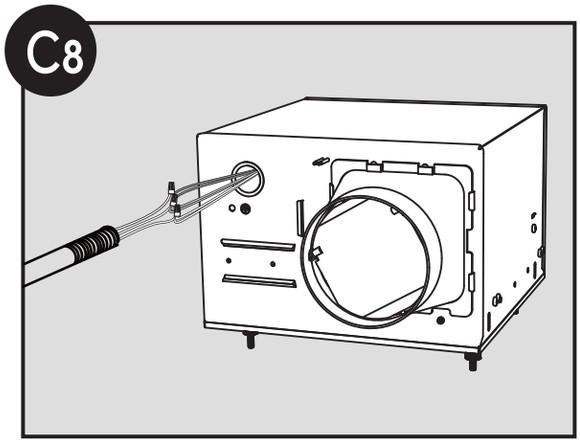

Connect to the supply wires. For supply connection, use wires suitable for at least 194° F.

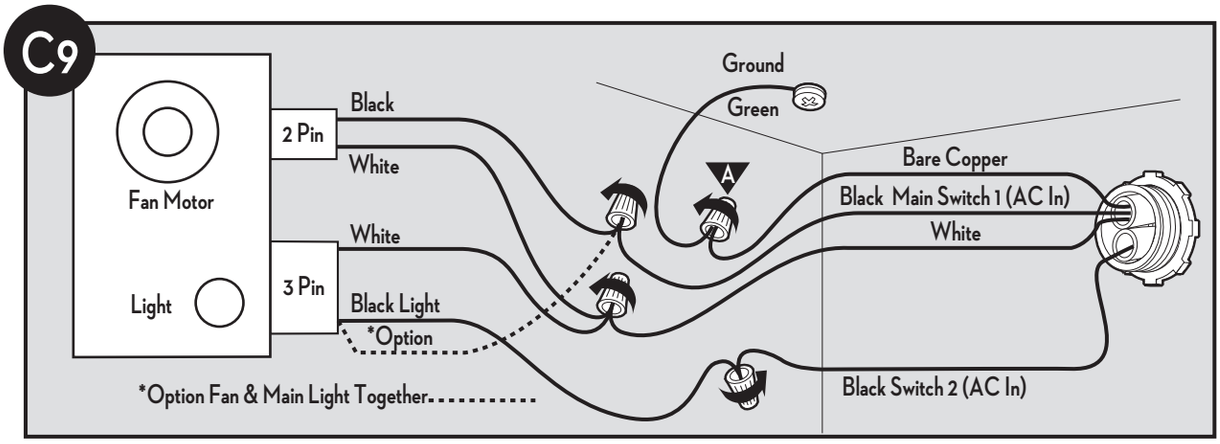

Connect wires as shown.

C10

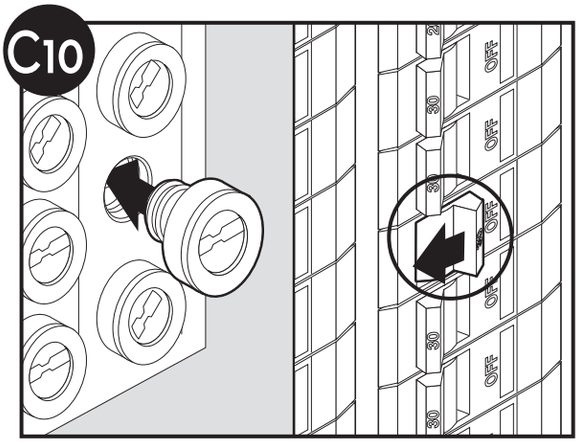

Turn on the power source.

C11

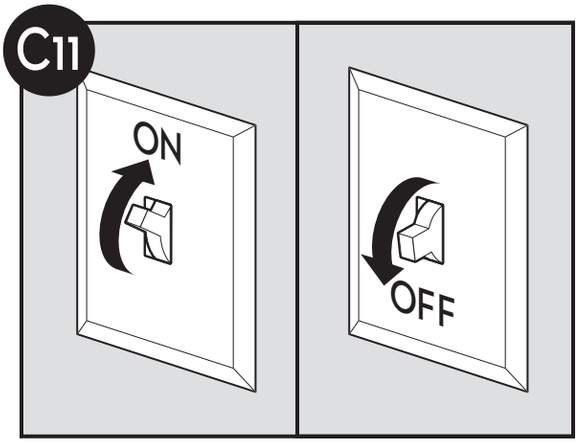

Test the motor. If the motor does not run, check the plug connection.

C12

Go to step

E1

on page 13

to attach grill.

Existing Construction – accessible only from below

D1 EXISTING FAN

Remove an existing fan and check to make sure the opening is large enough to accommodate the new motor housing (9.75"x 9.75").

D2

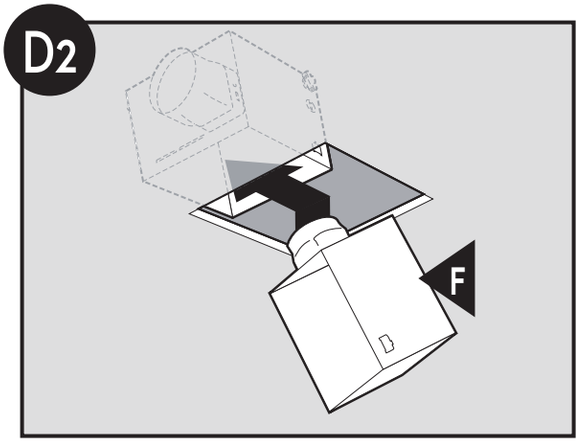

Move the housing into position above the ceiling.

D3

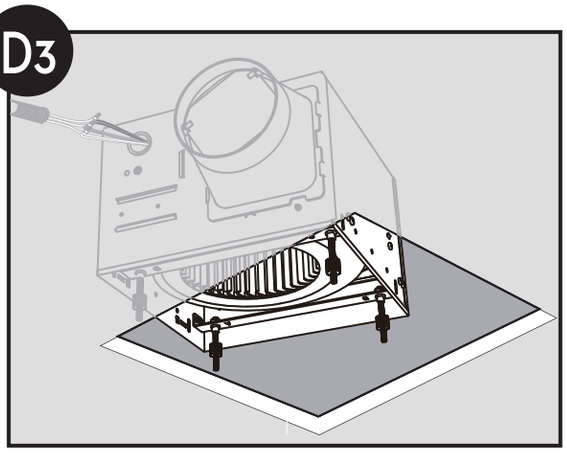

Connect to the supply wires. For supply connection, use wires suitable for at least 194º F.

D4

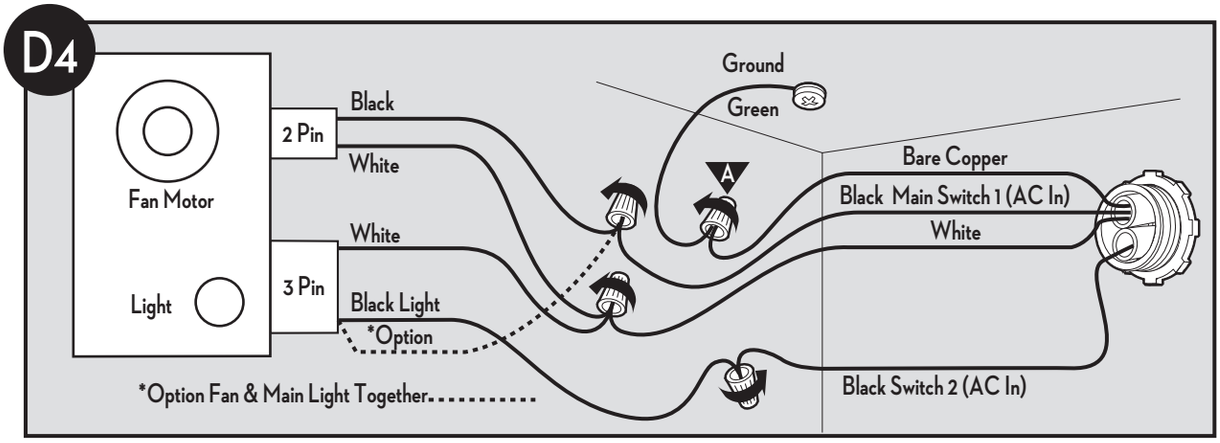

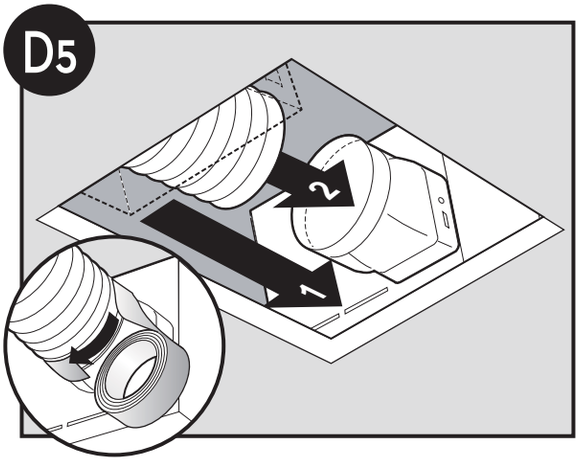

Attach existing ducting to duct connector. Tape joints. If ducting does not fit securely, an adapter may need to be purchased.

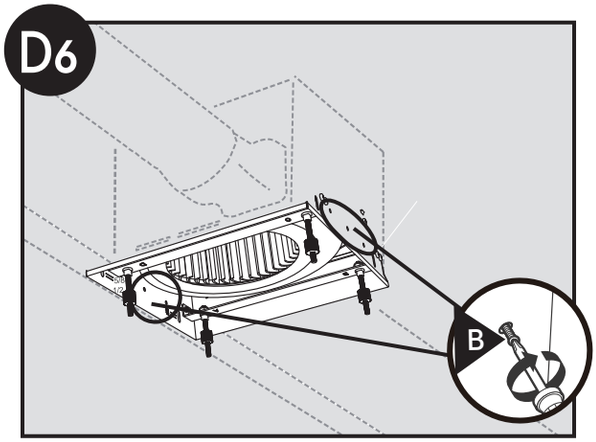

Screw six (6) wood screws into joist or framing.

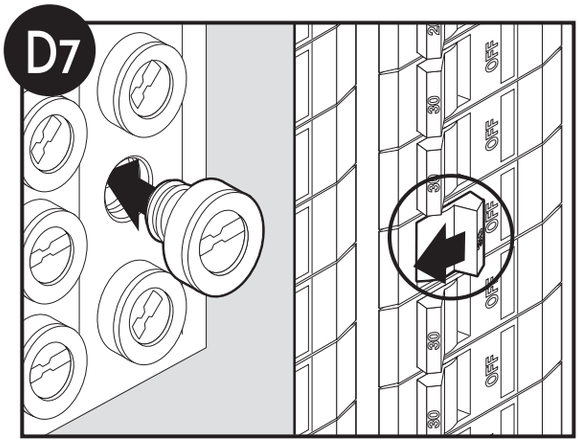

Turn on the power source.

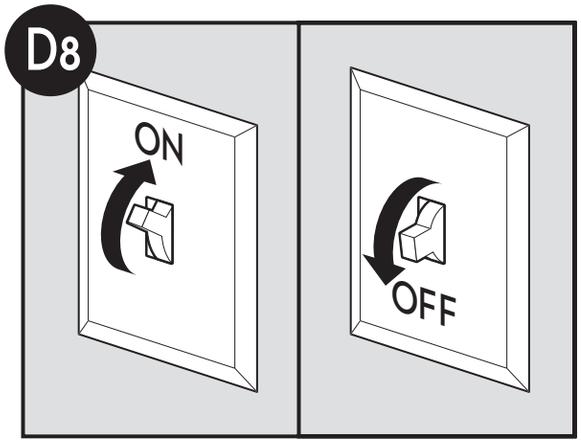

Test the motor. If the motor does not run, check the plug connection.

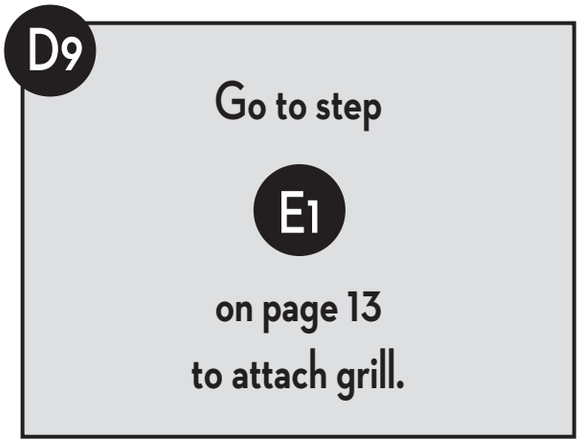

Attaching the Grill

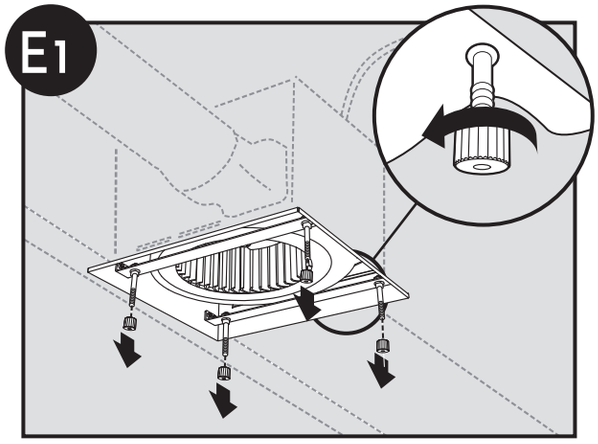

Remove the thumbscrews.

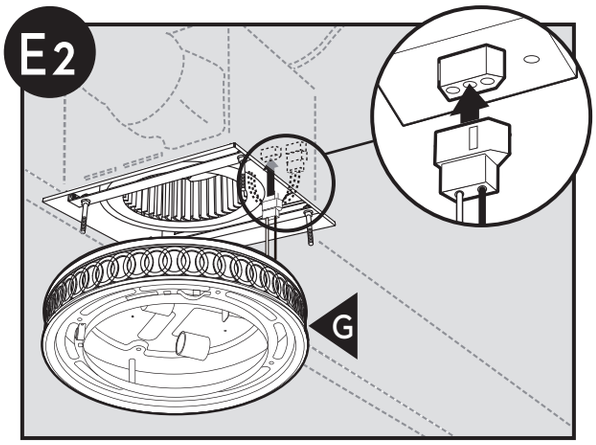

Connect wiring harness. DO NOT ALLOW THE FIXTURE TO HANG FROM THE WIRING HARNESS.

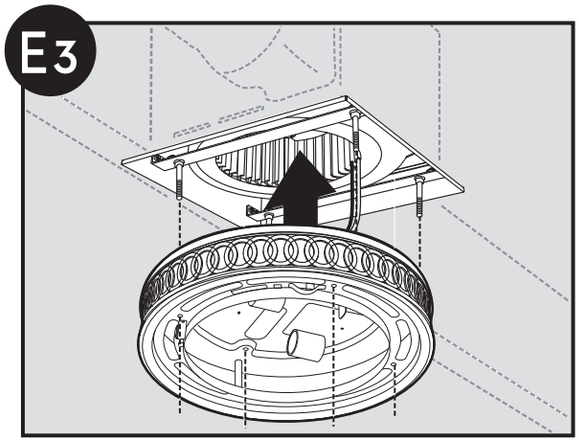

Align posts A, B, C and D (stamped into motor housing) with posts A, B, C and D (stamped into light fixture). Slide light fixture over posts.

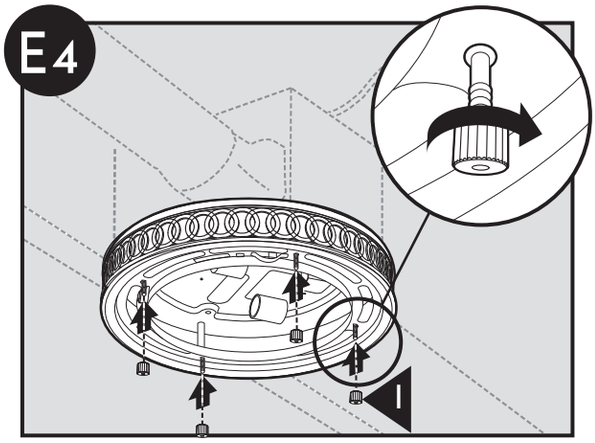

Attach thumbscrews.
WARNING: To reduce the risk of electrical shock, all 4 thumbscrews MUST be properly installed.

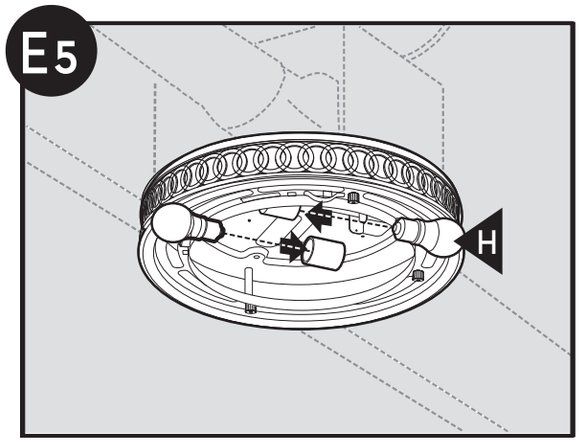

Install 2 LED 9 watt A-19 bulbs (Included).

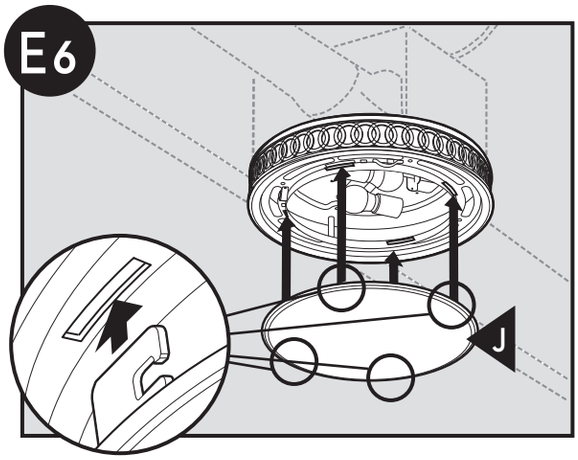

Align tabs on glass dome assembly with slots on light fixture, and insert tabs into slots.

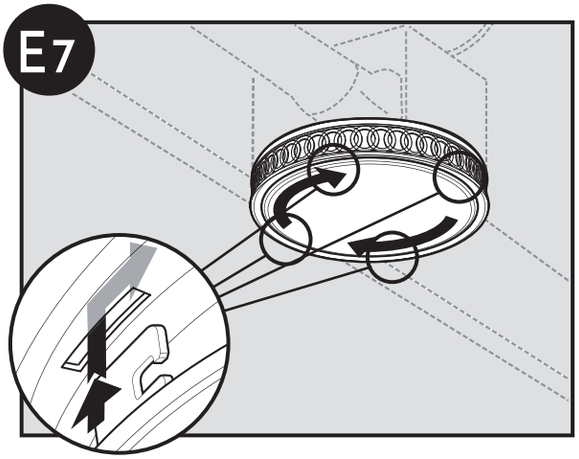

Turn glass dome assembly as shown until it locks into position.

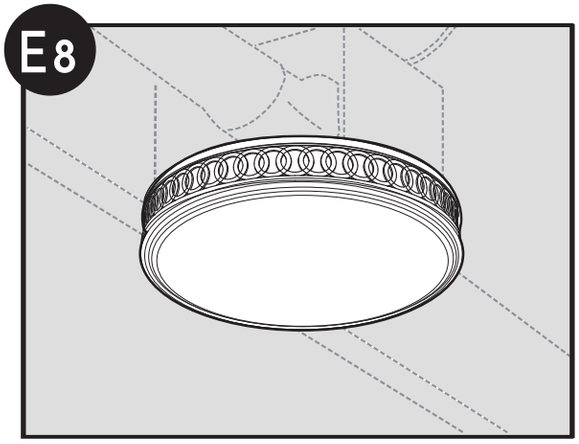

Complete.

Trouble Shooting

Problem: Fan does not come on.

Solution:

- Good Housekeeping Bath Ventilators are extremely quiet. To confirm that the fan is running, place your hand near the vents to feel the air movement.
- Turn power on, replace fuse, or reset breaker.
- Check all plug connections to ensure they are secure.
- Check the wiring to ensure it matches the wiring diagram.

Problem: Light does not come on.

Solution:

- Replace the light bulb with a new bulb.
- Turn power on, replace fuse, or reset breaker.
- Check all plug connections to ensure they are secure.
- Check the wiring to ensure it matches the wiring diagram.

Problem: Fan is noisy.

Solution:

- Check and tighten all fasteners.
- Check the glass to make sure it is secure.
- Check the flapper to ensure it moves freely.

If you need any assistance with setup, operation, or parts for your new Good Housekeeping bath ventilator, please call us. Our technical support staff is ready to help! We are open 24 hours a day, 7 days a week.

USA: 1-888-880-3267 (FANS)

You may also reach us online at www.OceanAireHomeGoodsCompany.com.
An electronic copy of this user manual can also be obtained online at www.OceanAireHomeGoodsCompany.com.

Warranty

OceanAire Home Goods Company
Bath Ventilator

LIMITED WARRANTY

OceanAire Home Goods Company makes the following limited warranty to the original user or consumer purchaser of this Good Housekeeping bath ventilator:

If any part of your Good Housekeeping bath ventilator (except for glass fixtures and light bulbs) fails at any time within two years after the date of sale to you due to a defect in material or workmanship, we will repair or, at our option, replace the defective part free of charge for parts and labor performed at our nearest service center or at our Service Department in Kennesaw, Georgia. After this two-years period, you will be responsible for all parts and labor costs for repairs on the bath ventilator except for motor repairs as provided below.

If your Good Housekeeping bath ventilator motor fails at any time within two years after the date of sale to you due to a defect in material or workmanship, labor and materials to repair the defect will be provided free of charge at our nearest service center or our Service Department in Kennesaw, Georgia. If no replacement part can be provided, we will, at our option, either refund the actual purchase price of your bath ventilator or provide a replacement free of charge. After this two-years period, you will be responsible for all parts and labor costs for repairs on all parts of the bath ventilator.

IF THE ORIGINAL USER OR CONSUMER PURCHASER CEASES TO OWN THE FAN, THIS WARRANTY AND ANY IMPLIED WARRANTY WHICH THEN REMAINS IN EFFECT, INCLUDING BUT NOT LIMITED TO ANY IMPLIED WARRANTY OF MERCHANTABILITY OR FITNESS FOR A PARTICULAR PURPOSE, ARE VOIDED. NO WARRANTY, EXPRESS OR IMPLIED, INCLUDING ANY WARRANTY OF MERCHANTABILITY OR FITNESS FOR A PARTICULAR PURPOSE, IS MADE IN RESPECT OF GLASS FIXTURES OR LIGHT BULBS OR THE FINISH ON ANY METAL PORTION OF THE BATH VENTILATOR.

THIS WARRANTY IS IN LIEU OF ALL OTHER EXPRESS WARRANTIES. THE DURATION OF ANY IMPLIED WARRANTY, INCLUDING, BUT NOT LIMITED TO, ANY IMPLIED WARRANTY OF MERCHANTABILITY OR FITNESS FOR A PARTICULAR PURPOSE, IN RESPECT TO ANY GOOD HOUSEKEEPING BATH VENTILATOR MOTOR OR OTHER FAN PART, IS EXPRESSLY LIMITED TO THE PERIOD OF THE EXPRESS WARRANTY SET FORTH ABOVE FOR SUCH MOTORS OR OTHER PARTS.

This warranty is voided if your Good Housekeeping bath ventilator is not purchased and installed in the contiguous USA. This warranty excludes and does not cover defects, malfunctions or failures of any Good Housekeeping bath ventilator which were caused by repairs by persons not authorized by us, use of parts or accessories not authorized by us, mishandling, improper installation, modifications or damage to the Good Housekeeping bath ventilator while in your possession, or unreasonable use including failure to provide reasonable and necessary maintenance.

To obtain servicing, contact the OceanAire Home Goods Company Service Department, 980 Cobb Place Boulevard NW, Suite 100, Kennesaw, GA 30144. Please contact us before shipping your bath ventilator to us. If we authorize you to ship it to us, you will be responsible for all insurance and freight or other transportation charges to our factory or service center. We will return your Good Housekeeping bath ventilator freight prepaid. Your Good Housekeeping bath ventilator should be properly packed to avoid damage in transit since we will not be responsible for any such damage. Proof of purchase is required when requesting warranty service. The purchaser must present the sales receipt or other document that establishes proof of purchase.

IN NO EVENT SHALL OCEANAIRE HOME GOODS COMPANY BE LIABLE FOR CONSEQUENTIAL OR INCIDENTAL DAMAGES.

SOME STATES DO NOT ALLOW LIMITATIONS ON HOW LONG AN IMPLIED WARRANTY LASTS OR THE EXCLUSION OR LIMITATION OF INCIDENTAL OR CONSEQUENTIAL DAMAGES SO THE ABOVE LIMITATION OR EXCLUSIONS MAY NOT APPLY TO YOU.

THE WARRANTY GIVES YOU SPECIFIC LEGAL RIGHTS AND YOU MAY ALSO HAVE OTHER RIGHTS WHICH VARY FROM STATE TO STATE.

GOOD
HOUSEKEEPING

980 Cobb Place Boulevard NW, Suite 100, Kennesaw, GA 30144
GOOD HOUSEKEEPING is a trademark of Hearst Communications, Inc.
2022 Hearst Communications, Inc. All Rights Reserved.

Printed in China

42106-01 R20240201