ASSEMBLY AND INSTALLATION INSTRUCTIONS

WARNING: TO AVOID RISK OF ELECTRICAL SHOCK, BE SURE TO SHUT OFF POWER BEFORE INSTALLING OR SERVICING THIS FIXTURE.

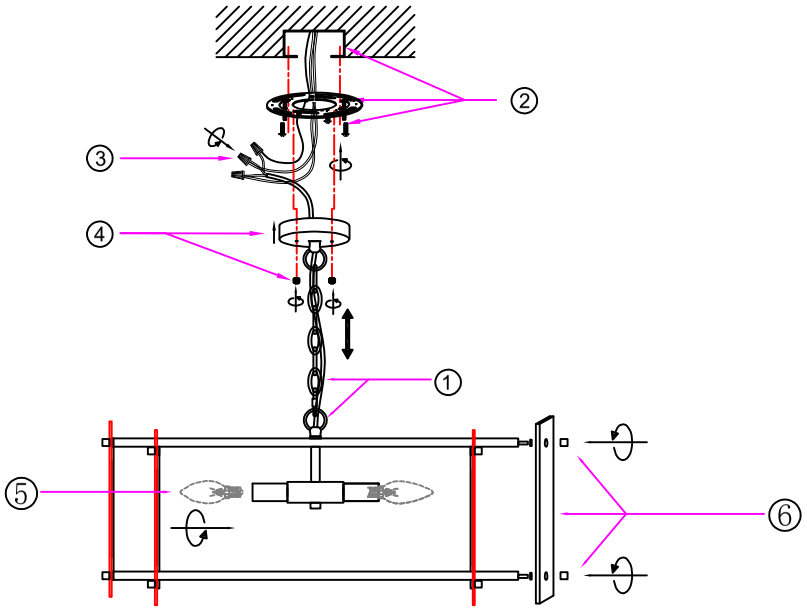

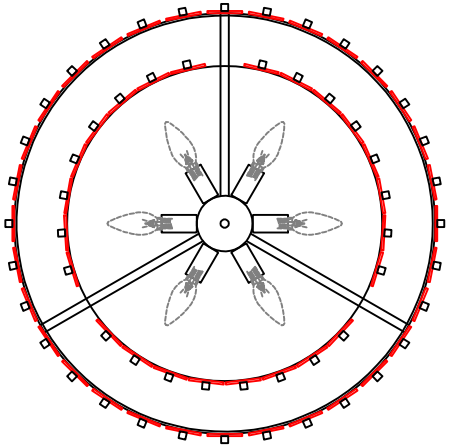

Before You Begin:

- Ensure power is turned off at the circuit breaker before installation.
- Read all instructions carefully.
- Installation should be performed by a qualified electrician if you are unfamiliar with wiring.

Step-by-Step Installation:

1.Use quick links to attach the chain to the fixture loop and the canopy loop. The chain length can be adjusted as needed.
Feed the fixture wires through the chain and the holes in the canopy.
2.Secure the mounting plate inside the junction box using the mounting screws.
3.Wiring Connections
·Use wire connectors to connect the fixture's positive wire (L), negative wire (N) to the corresponding wires from the junction box. Connect the ground wires to the grounding terminal.
·Ensure no exposed conductors remain outside wire connectors or outside the junction box.
4.Place the canopy over the mounting plate and secure it with the nuts.
5.Install light bulbs (bulbs not included).
6.Align the top and bottom holes of the glass pieces with threaded posts on the fixture body, then tighten with the decorative nuts.
7.Turn on the power and verify that the light is working normally.
Installation is complete.

Safety Instructions:

To avoid fire, shock, and serious personal injury, follow all instructions carefully.
1. Do not install or use the light fixture if any part is missing or damaged.
2. To avoid possible electrical shock, be sure electricity is turned off at the main fuse or circuit breaker box before wiring.
3. Make certain no bare wires are exposed outside the wire connectors.
4. All wiring must conform to national and local electrical codes.
5. Follow the recommended instructions for the proper method of wiring your new light fixture. If you feel you do not have enough electrical wiring knowledge or experience, have your light fixture installed by a licensed electrician. Any electrical work not described in this manual should be performed by a licensed electrician.