Wood Platform Bed

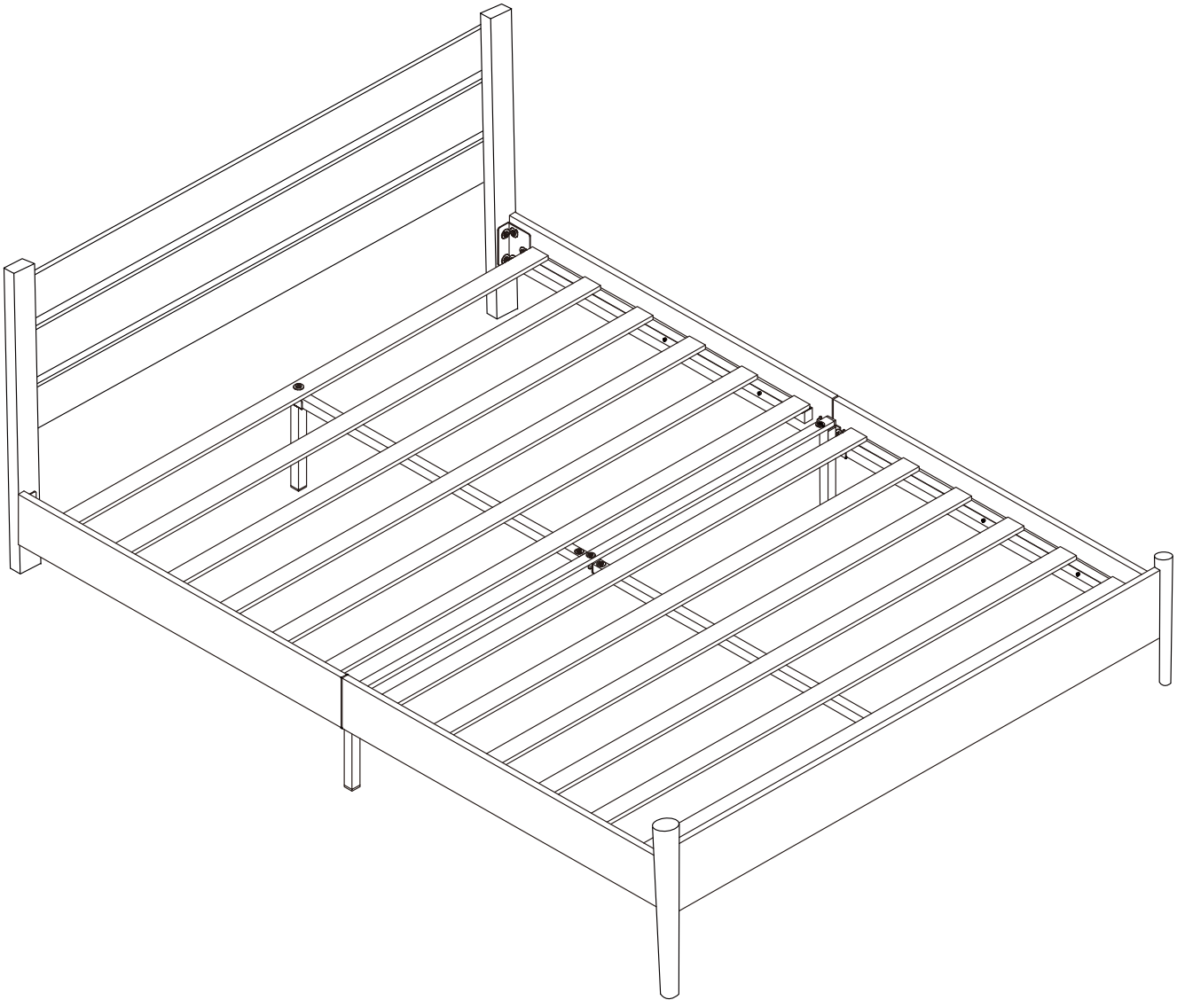

Dear Customers,

Thank you for purchasing our product. Please read this instruction manual carefully after receiving this product. It will help you assemble this product quickly, safely and correctly. You can keep this manual for future reference.

IMPORTANT

Please follow the instruction manuals and use a pad to protect the product during your assembly.

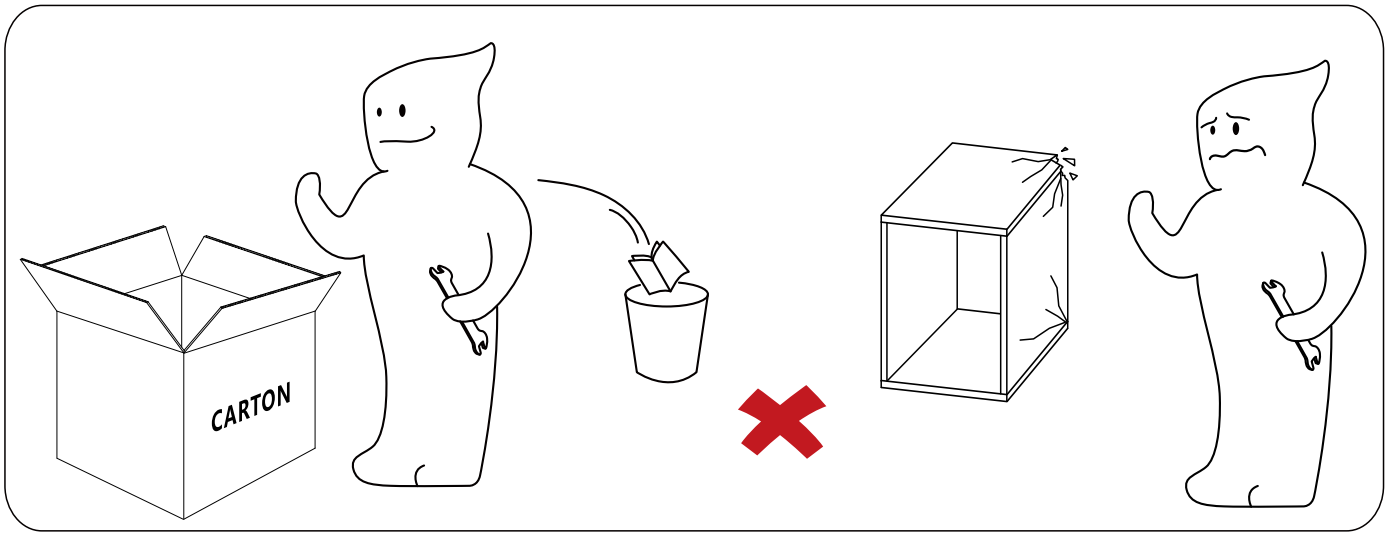

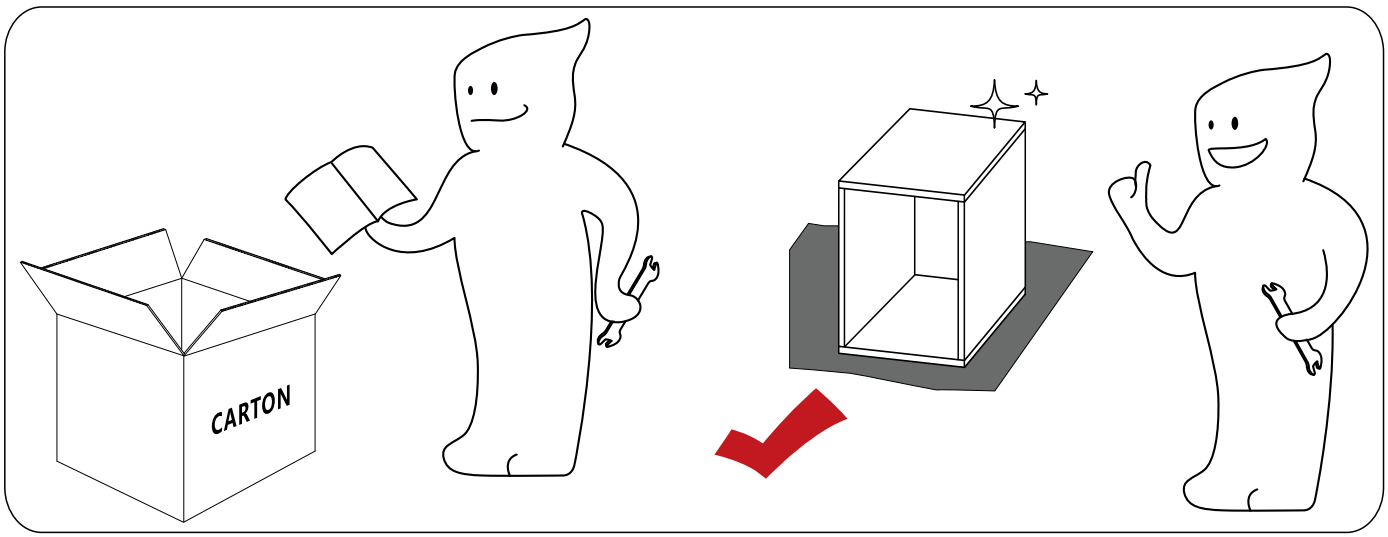

Note:
1. Should be assembled on flat ground to keep balance.
2. Before completing the installation, do not tighten the screws.
3.Finally,tighten all the screws manually.



For easier and better assembly, **2** or more adults are required.

ALPHABETICAL NUMBERING	DESCRIBE	ILLUSTRATION	NUMBER
A	Slat		1pc
B	Slat		1pc
C	Donwn headboard		2pcs
C1	Connector wood	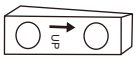	2pcs
C2	Connector wood		2pcs
C3	Up headboard		1pc
D	Headboard leg		1pc
D1	Headboard leg		1pc
E	Footboard	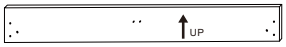	1pc
F	Side panel	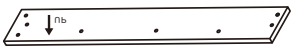	2pcs
F1	Side panel		2pcs
G	Support bar		1pc
H	Support bar		1pc
I	Support bar		1pc
J	Support wood		4pcs
K	Support leg	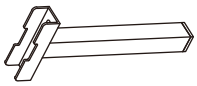	2pcs
L	Support leg		2pcs
M	Wood leg		2pcs

Ruler-Use this ruler to help correctly identify the screws.

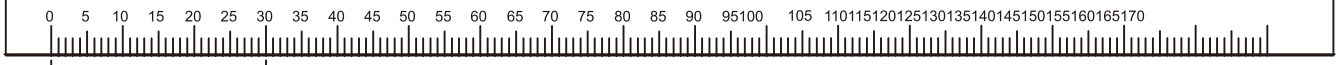

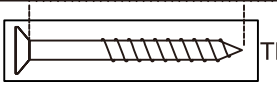

The length of the screw is measured from the rod part excluding the screw cap (30mm screw shown).

ALPHABETICAL NUMBERING	DESCRIBE	ILLUSTRATION	NUMBER
N	Connector plate 100x2 mm		2pcs
N1	Connector plate 100x2 mm		2pcs
O	Sponge-cushion		4pcs
P	Washer φ8x18x1.5 mm		74pcs+1pc
Q	Wrench M6		1pc
R	Screw M8x50 mm		1pc
R1	Screw M8x35 mm		25pcs+1pc
R2	Screw M8x30mm		12pcs
R3	Screw M8x25 mm		8pcs
R4	Screw M8x16 mm		28pcs+1pc

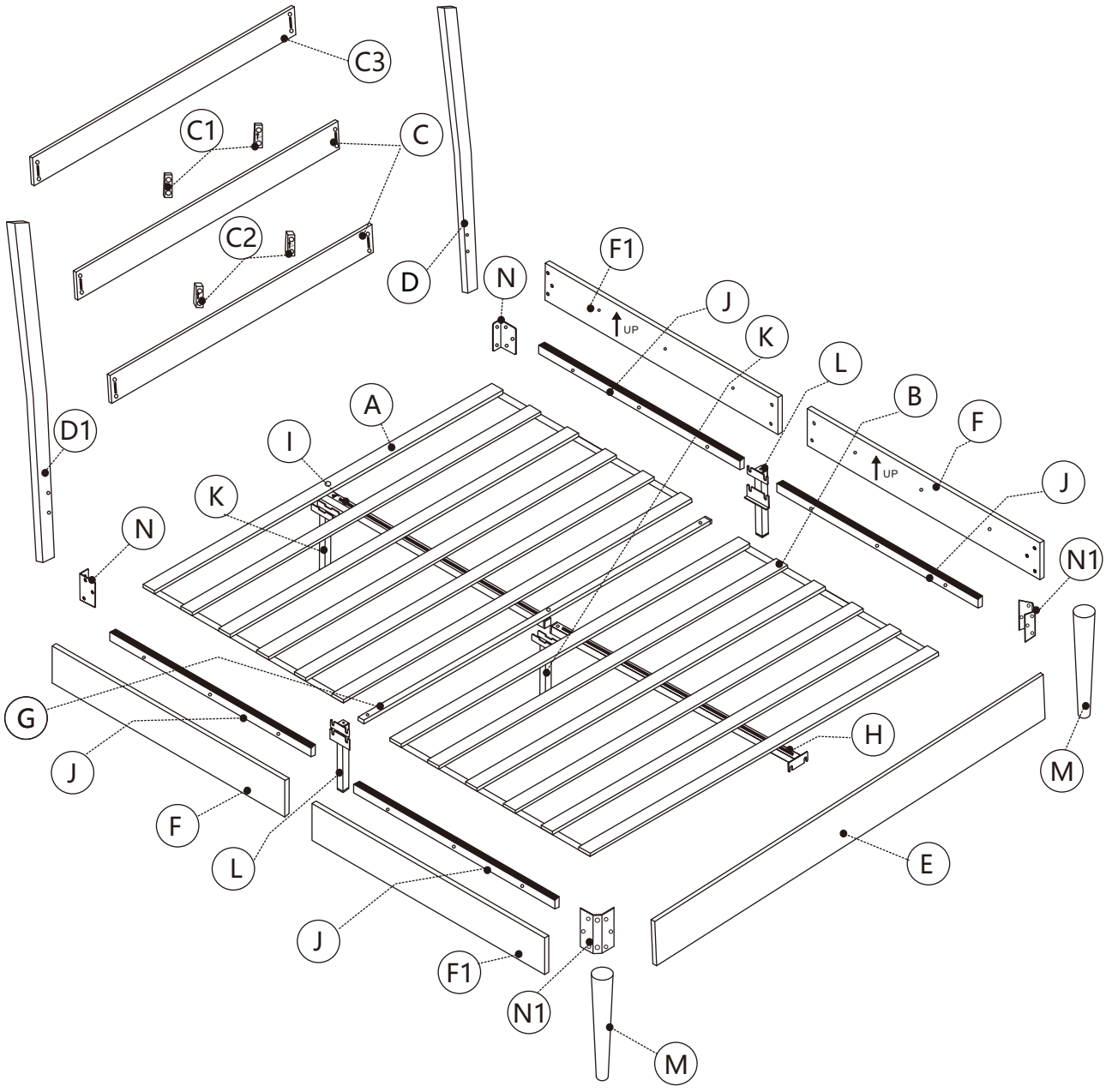
C3
C1
C
C2
D
N
F1
UP
J
K
L
B
F
D1
A
I
K
N
J
N1
G
J
F
L
H
M
E
J
F1
N1
M

1 Tight all the inner screw after all holes are aligned.

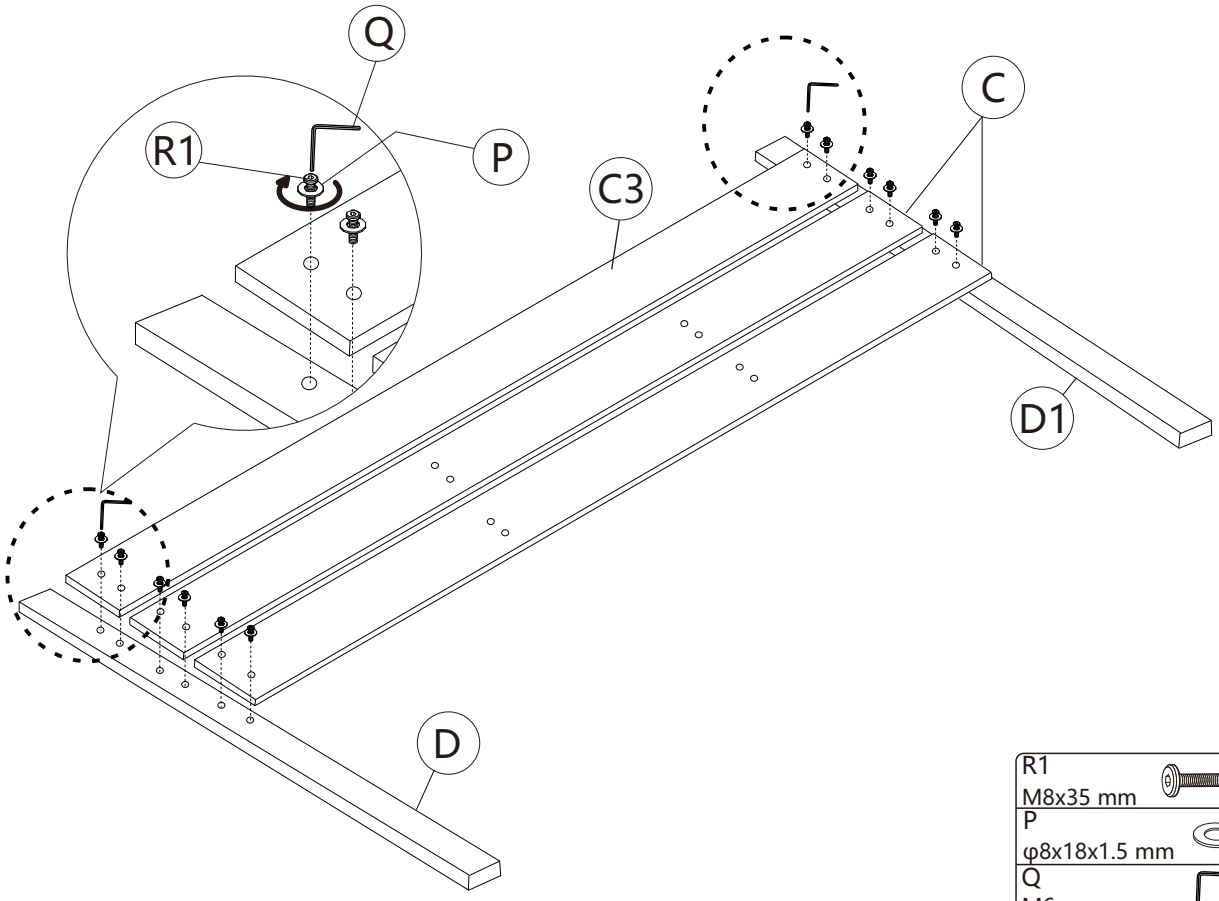

R1 M8x35 mm		12pcs
P φ8x18x1.5 mm		12pcs
Q M6		1pc

2

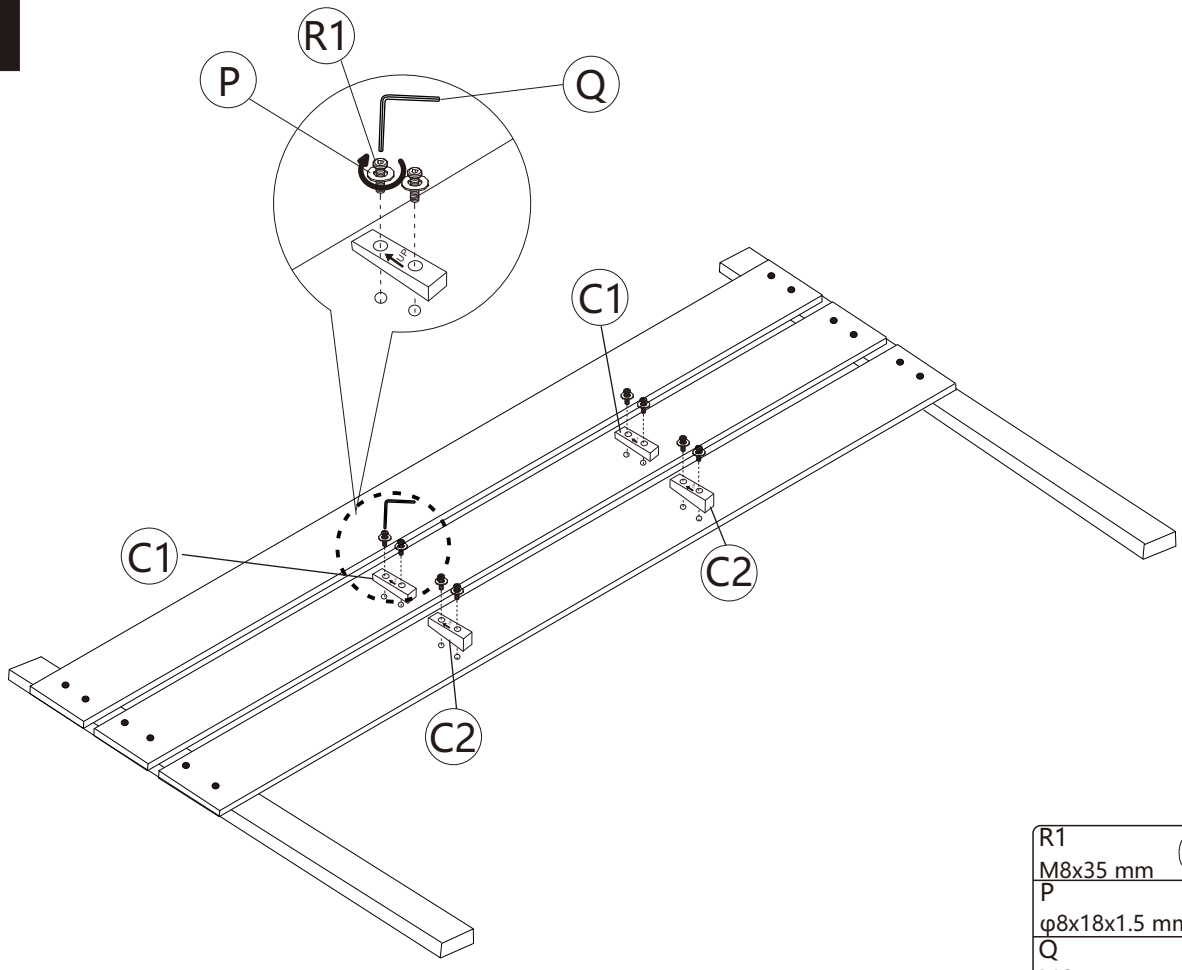

R1 M8x35 mm		8pcs
P φ8x18x1.5 mm		8pcs
Q M6		1pc

3

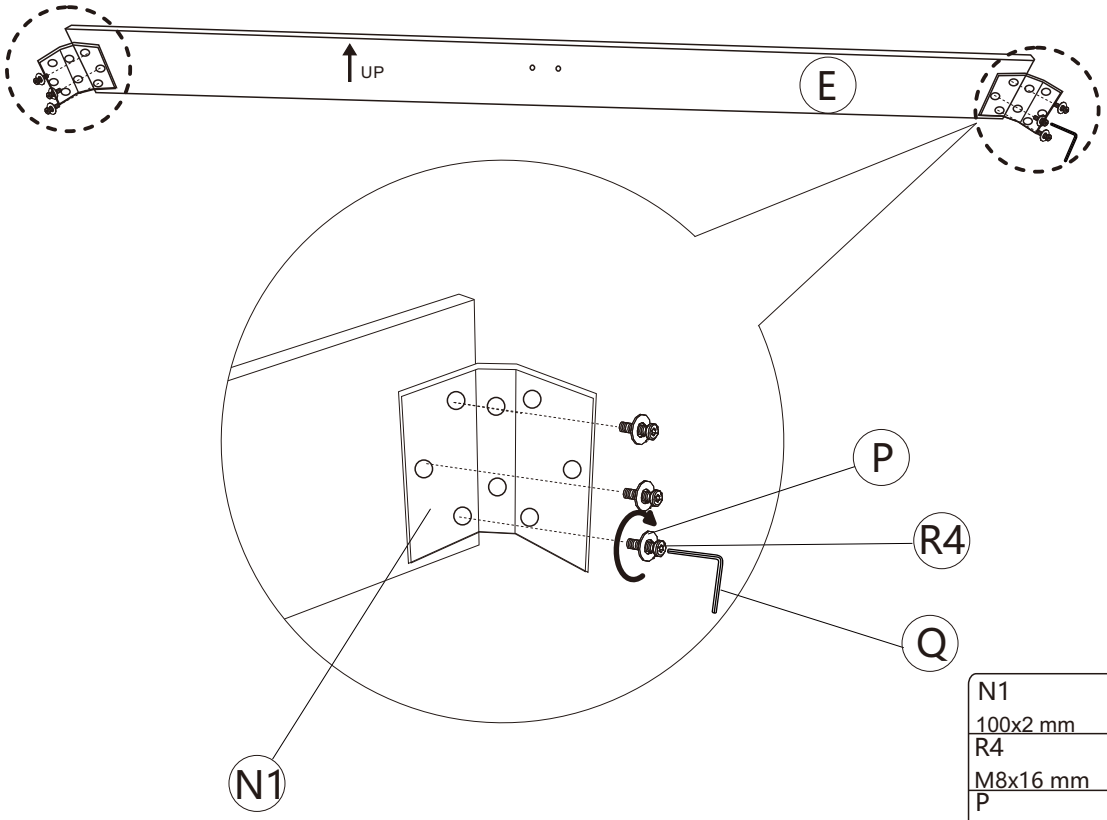

N1 100x2 mm		2pcs
R4 M8x16 mm		6pcs
P φ8x18x1.5 mm		6pcs
Q M6		1pc

4

Take out parts F and F1, and lock the iron frame foot L in the middle according to the figure. Note that there are **2 holes** located on the inner side of the board. Then lock the bed hanging piece N on the front and rear of the board, with **3 holes** on each side.

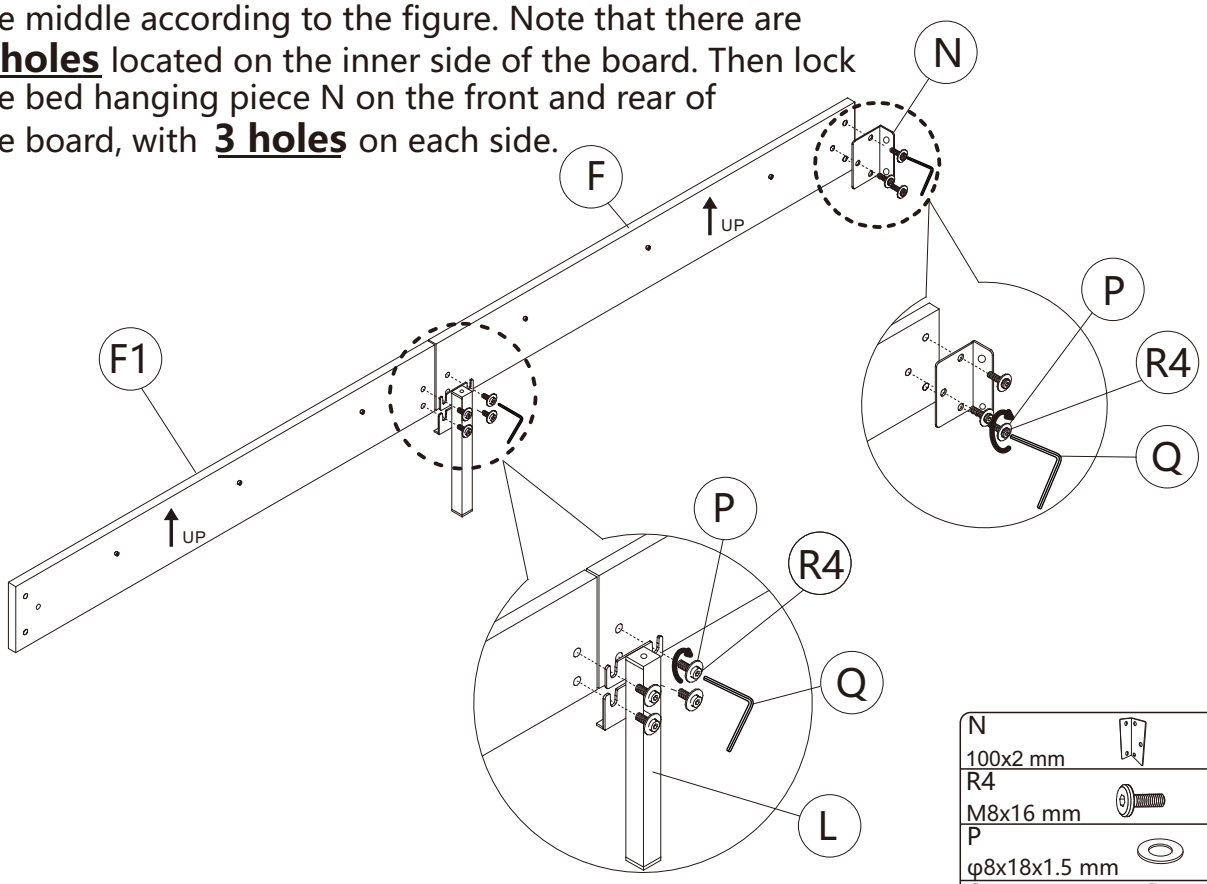

N 100x2 mm		1pc
R4 M8x16 mm		7pcs
P φ8x18x1.5 mm		7pcs
Q M6		1pc

5

Same as Step 4.

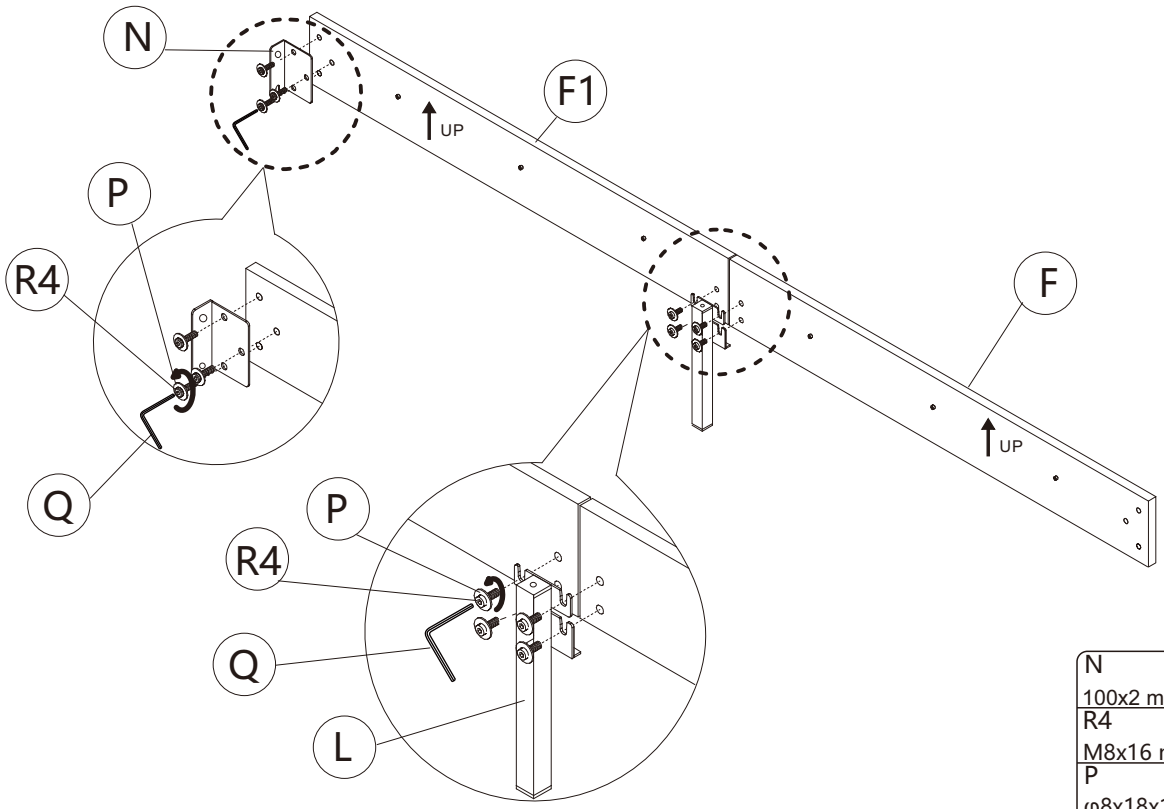

N 100x2 mm		1pc
R4 M8x16 mm		7pcs
P φ8x18x1.5 mm		7pcs
Q M6		1pc

6

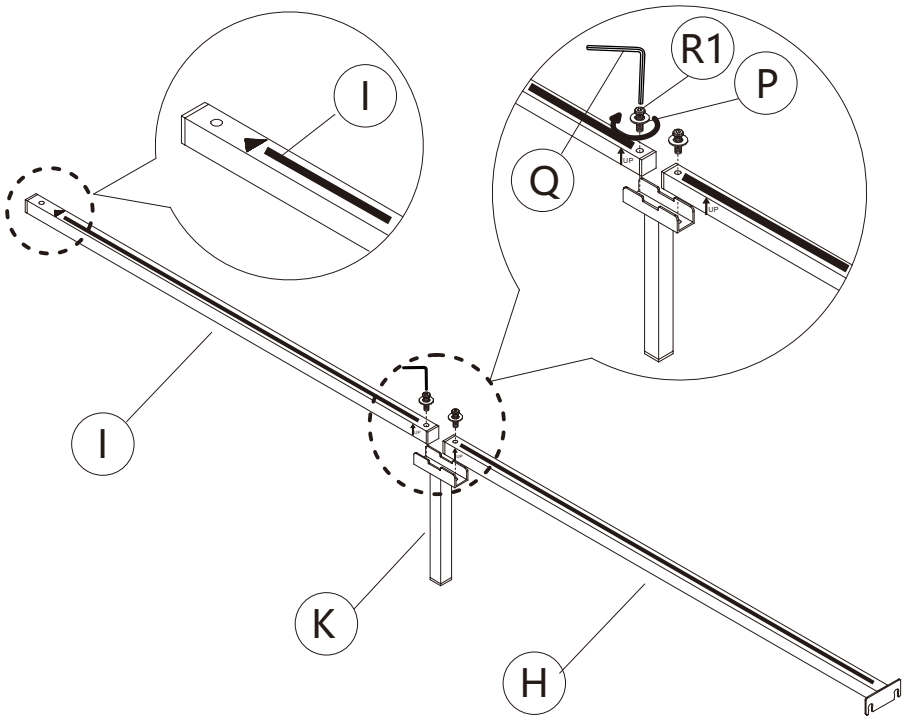

R1 M8x35 mm		2pcs
P φ8x18x1.5 mm		2pcs
Q M6		1pc

7

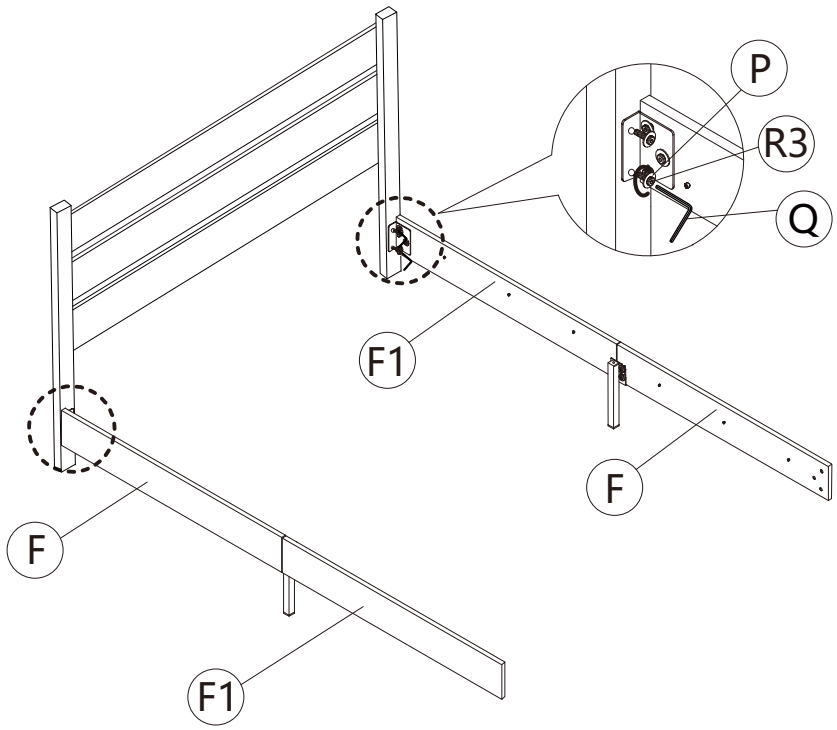

R3 M8x25 mm		4pcs
P φ8x18x1.5 mm		4pcs
Q M6		1pc

8

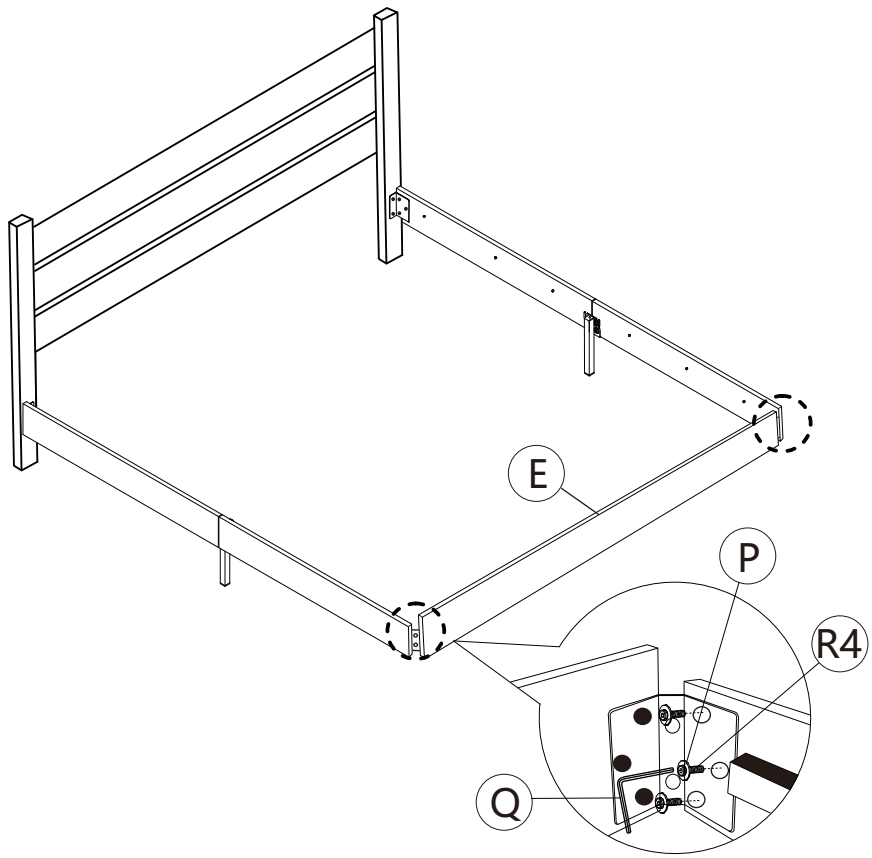

R4 M8x16 mm		6pcs
P φ8x18x1.5 mm		6pcs
Q M6		1pc

9

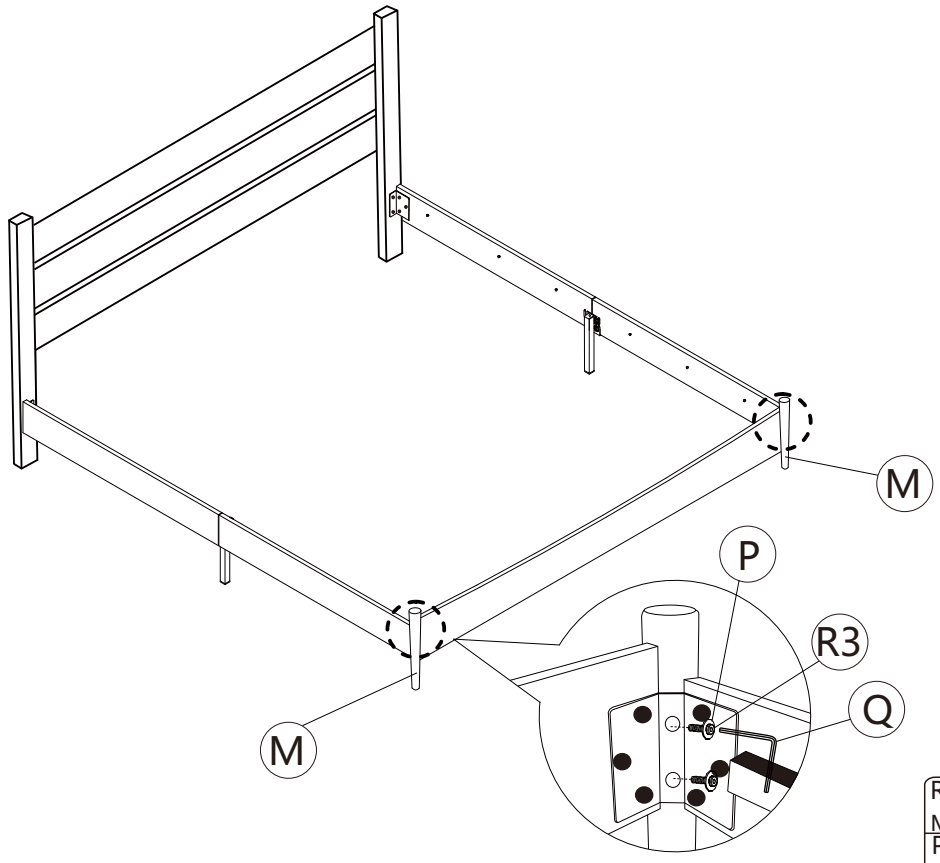

R3 M8x25 mm		4pcs
P φ8x18x1.5 mm		4pcs
Q M6		1pc

10

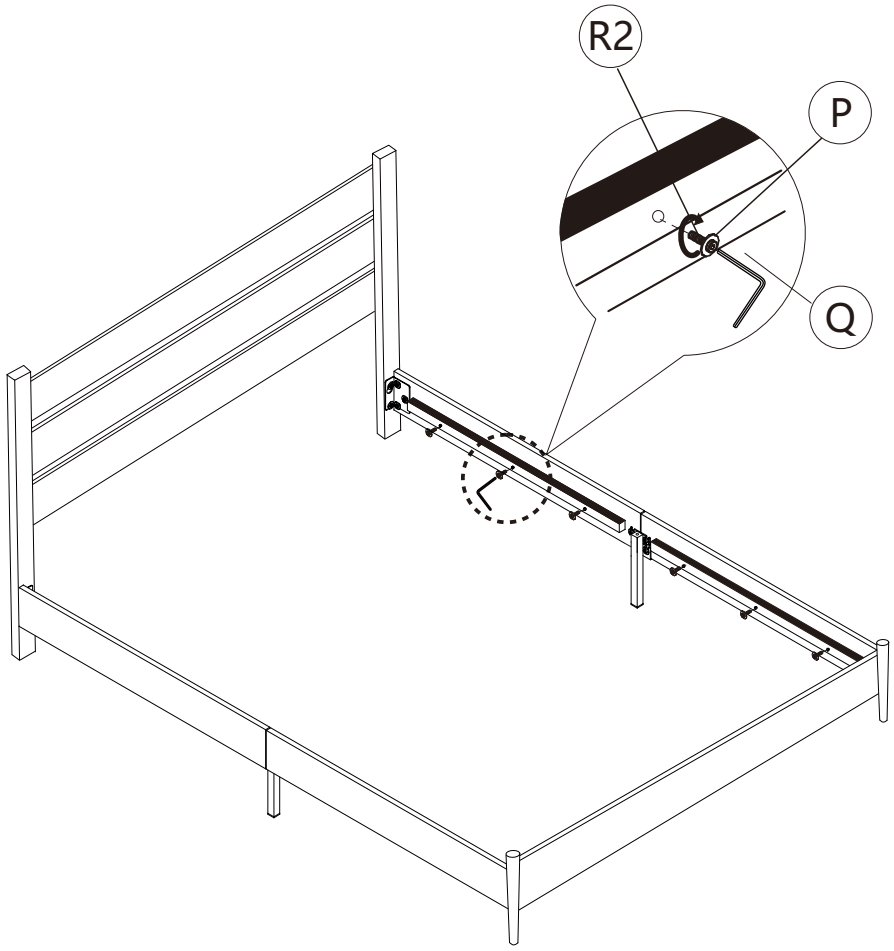

R2 M8x30 mm		12pcs
P φ8x18x1.5 mm		12pcs
Q M6		1pc

11

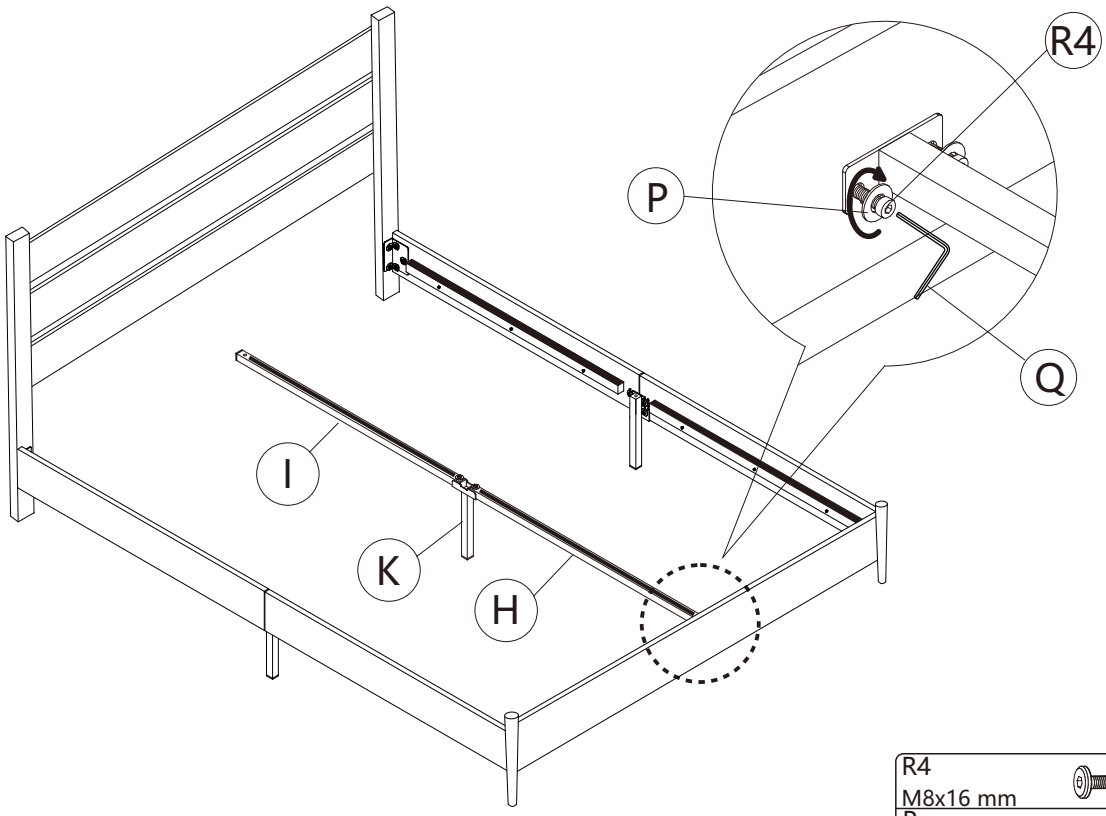

R4 M8x16 mm		2pcs
P φ8x18x1.5 mm		2pcs
Q M6		1pc

12

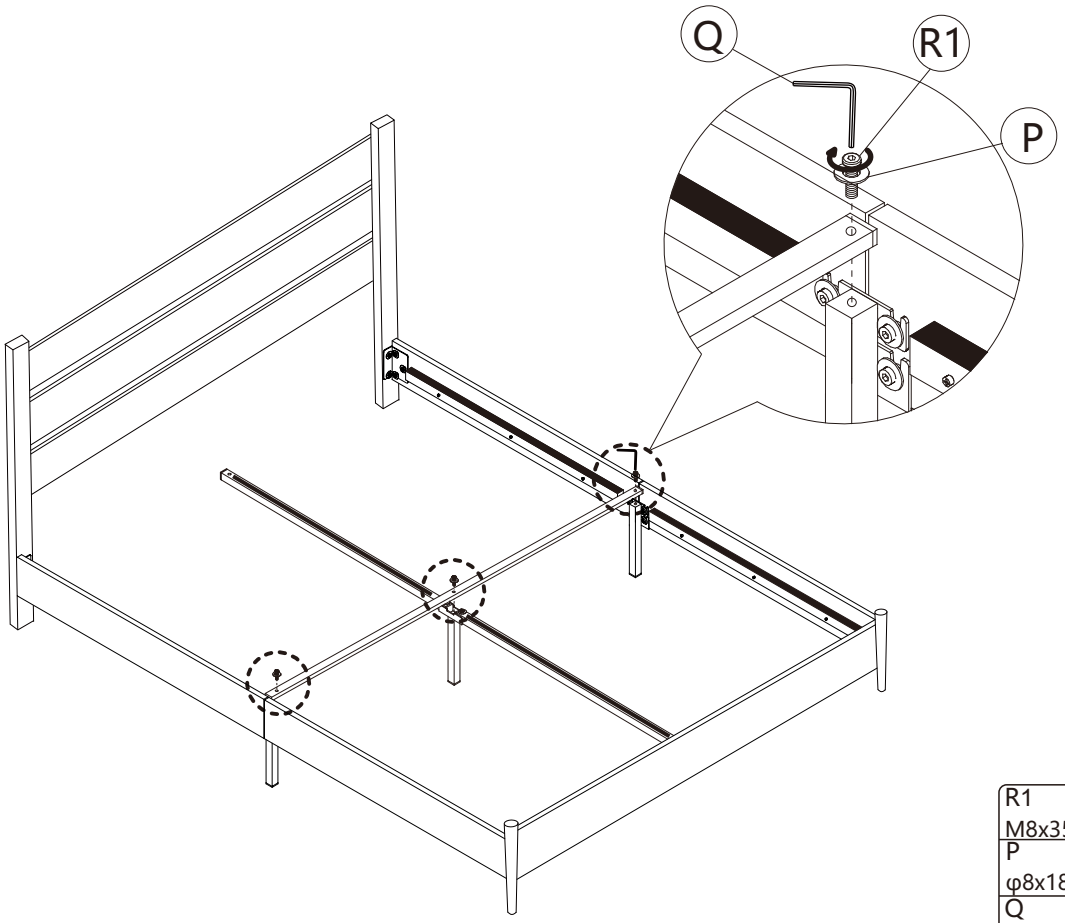

R1 M8x35 mm		3pcs
P φ8x18x1.5 mm		3pcs
Q M6		1pc

13 Note that there is a slat with a hole in part A for connecting to part K.

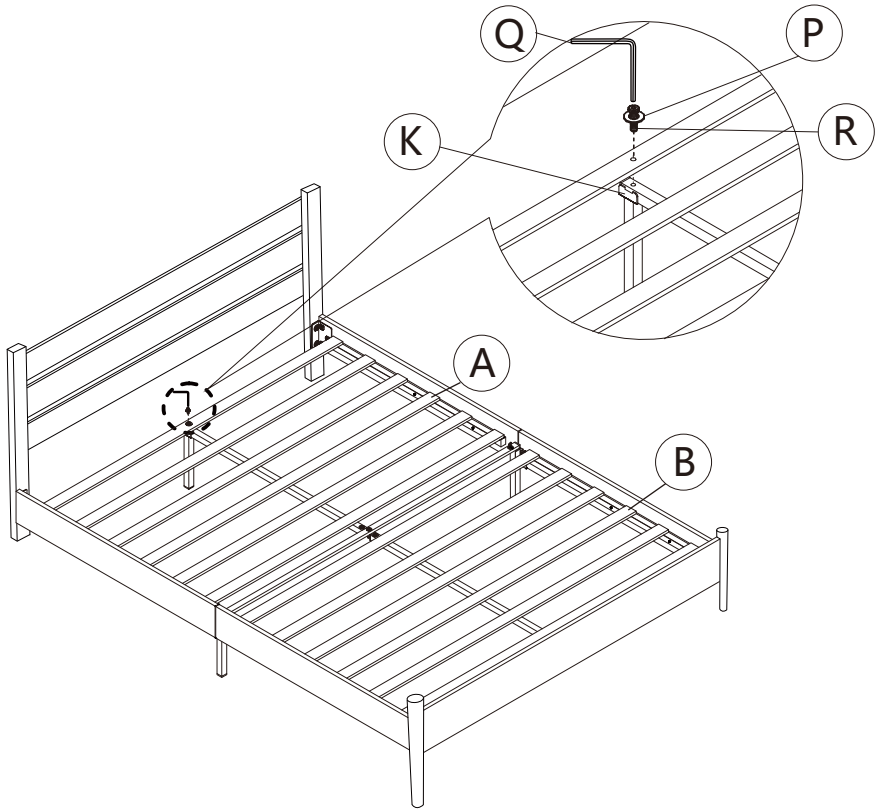

R M8x50 mm		1pc
P φ8x18x1.5 mm		1pc
Q M6		1pc

Pls make sure that all screws are 100% tight.

14 Stick **O** on the back to avoid noice.

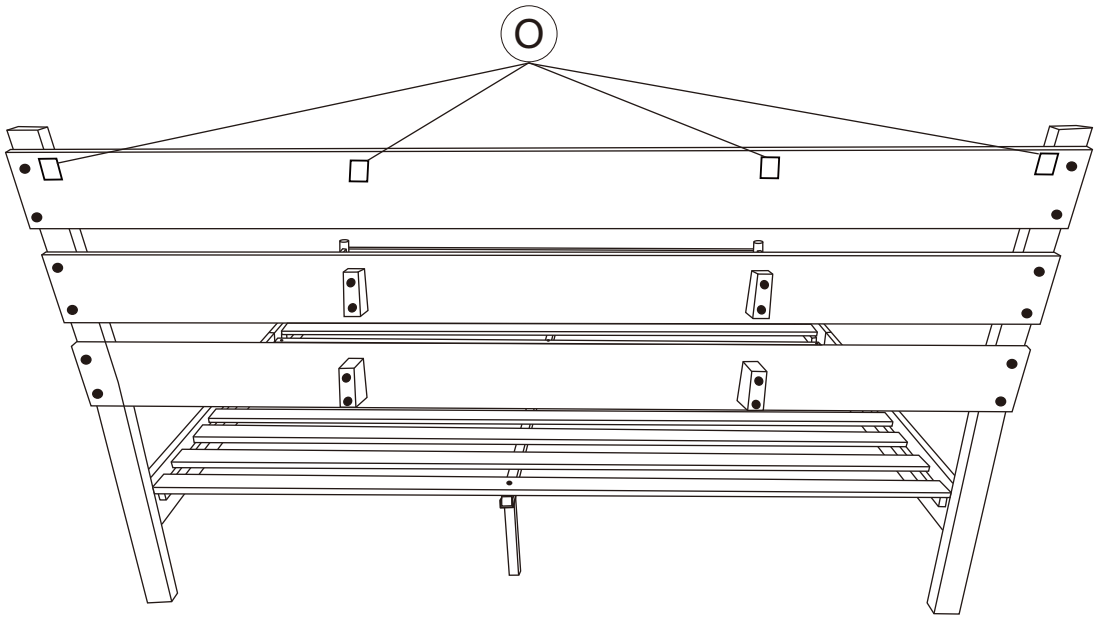

13

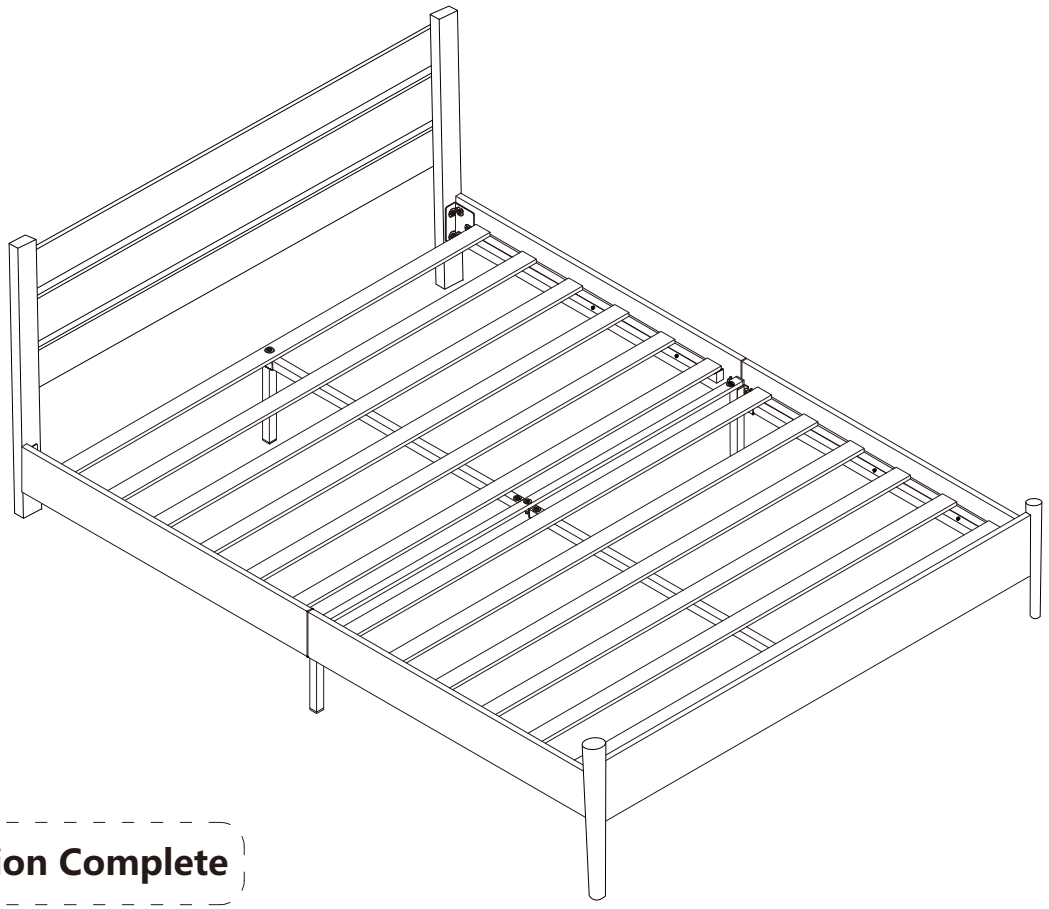

Installation Complete