5 YEAR LIMITED WARRANTY

"THANK YOU" for purchasing our product. It is our policy to furnish you with high quality products at a fair price. With proper installation your fan should provide you with years of money saving comfort.

This fan is guaranteed to be free from defects in workmanship and material for a period of five (5) years from date of purchase. Within the first (1) year from date of purchase any defective product should be returned to your **RETAIL OUTLET** along with proof of purchase. For the balance of the warranty, four (4) years, the **MOTOR WINDINGS ONLY** shall be free of defects. We will correct such defects or replace the motor assembly at our option if the product is returned, **FREIGHT PREPAID**, to us. The returned fan must be accompanied by ***your proof of purchase and a cheque for $20.00*** for handling and labour charges.

All costs of removing and re-installing the product are **YOUR RESPONSIBILITY** Damage to any part as such by accident, misuse, improper installation or by affixing any accessories **IS NOT** covered by this warranty. As a result of varying climatic conditions in our area this warranty does not cover any changes in finishes, including rusting, pitting, corroding, tarnishing or peeling.

WARRANTY VOID: In cases of alteration, abuse, installation not in accordance with instructions or REMOVAL of the C.S.A. Sticker.

INSTALLATION INSTRUCTIONS

DOWNROD MOUNT SERIES

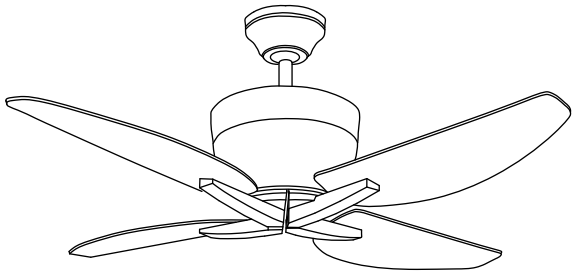

"INSTRUCTIONS PERTAINING TO RISK OF FIRE OR INJURY TO PERSONS"
"READ ALL INSTRUCTIONS"

"IMPORTANT SAFETY INSTRUCTIONS"
"SAVE THESE INSTRUCTIONS"

INSTALLATION AND WIRING TO BE IN ACCORDANCE WITH CEC, NEC, LOCAL ELECTRICAL CODES and ANSI/NFPA 70.
Consult a qualified electrician if you are not familiar with wiring.

TOOLS AND MATERIALS REQUIRED

- Philips Screw Driver
- Blade Screw Driver
- Step Ladder
- Wire Cutters
- Wiring supplies as required by electrical code.

C US

NOTE: FOR OPTIMUM QUIETNESS, FULLY ASSEMBLE FAN AND RUN 24 HOURS

SAFETY PRECAUTIONS

1. Turn off power at main electrical service box before starting installation.
2. Electrical connections must comply with local code ordinances, national electrical codes, CEC, NEC and ANSI/NFPA 70.
3. Make sure the installation site you choose allows the fan blades to rotate freely without any obstructions.
4. When mounting the fan on a ceiling outlet box, Use an approved (CSA for Canada and UL for U.S.) ceiling fan box marked "**FOR FAN SUPPORT**". Ensure the outlet box is securely installed in place such that it is able to support at least the fan weight.
5. WARNING: To reduce the risk of fire, electric shock, or personal injury, mount fan only to an outlet box marked acceptable for fan support and use mounting screws provided with the outlet box. Most outlet boxes commonly used for the support of lighting fixtures are not acceptable for fan support and may need to be replaced. Consult a qualified electrician if in doubt.
6. Total Fan Weight For Reference: 42"approximate 7.0 kgs(15.43lbs).

WARNING

- To reduce the risk of fire or electrical shock, ONLY use remote control for optional remote control adaptability.
- To reduce the risk of personal injury **DO NOT** bend the blade brackets when installing the brackets, balancing the blades or cleaning the fan. Also, **DO NOT** insert foreign objects in between rotating fan blades.
- Mount with the lowest moving parts at least 2.15 Meters (7 Feet) above floor or grade level.
- **DO NOT** operate reversing switch while fan blades are in motion. Fan must be turned off and rotating blades stopped, reverse chain pulled, the speed chain pulled again to start in the opposite direction.

INSTRUCTIONS

The slide switch is for forward/reverse rotation.
In cold weather: Set to reverse rotation (clockwise). Airflow will be directed upward, circulating warm air.
In warm weather: Set to forward rotation (counter-clockwise). Airflow will be directed downward, circulating cold air.

REMOTE CONTROL

Install 9 V battery (not included). Operation buttons on the remote:

1 - Fan high speed	**2** - Fan medium speed
3 - Fan low speed	**0** - Fan off
⏻ - Light on/off	ıılll - Light dimmer

*Hold down to increase or decrease the light.
The light has a memory function so the light will stay at the same brightness as the last time it was turned off.

TROUBLESHOOTING

TROUBLE	SUGGESTIONS
1. Fan will not start	- Check wiring connections to fan. - Check fuses and circuit breakers. - Check wiring connections in switch housing. ***CAUTION: Turn power off for last two items.***
2. Fan sounds noisy	- Check to make sure that all screws in motor housing are snug. - Check to make sure that blade bracket screws are tight. - Check to make sure that marrettes in switch housing are not rattling against wall of switch housing. - If fan has a light kit make sure switch housing screws and set screws are tight. - Some fan motors are sensitive to signals from solid state variable controls. If solid state controller is used, change to an alternative control. (See a representative for a list of available controls.) - Allow a 24 hour break in period to eliminate most noises.
3. Fan wobbles or shakes excessively.	- Check that all blades are screwed firmly into blade brackets. - Check that blade brackets are secured firmly to motor. - Check distance from tip of blades to ceiling. Gently bend up or down the blade brackets until all distances are the same. - Check distance between blade tip to blade tip. All measurements should be equal. Loosen blade screws and position blade until even then re-tighten. - Check that the downrod hemisphere notch is engaged in canopy. - Check to make sure that jam screws in downrod are tightened. - Make sure canopy and mounting bracket are tightened securely to wooden joist. - Make sure warpage has not occurred in wooden blades. If so, contact the customer service department for replacement parts.

7. MOUNTING BLADES TO MOTOR

- Take out hardware containing motor screws, lock washers and gaskets.
- Place lock washers over motor screws, position motor screws in blade brackets, place fibre bracket gaskets over screws and secure to motor. Make sure all screws are tightened securely.

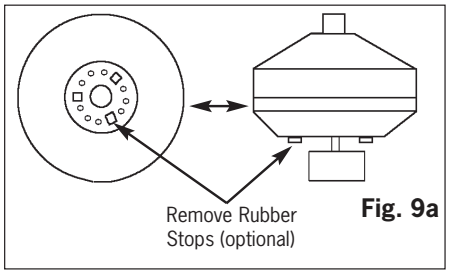

Fig. 9a

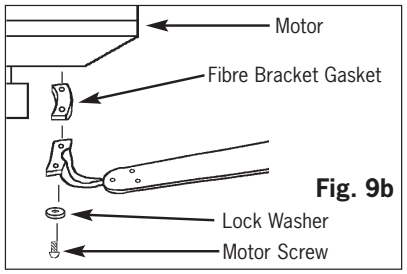

Fig. 9b

NOTE: Fan comes with three rubber stops (optional on some models) on motor for shipping purposes only. Remove stops before running motor or installing blades to motor.

WARNING: Check all connections, set screws and screws are securely tightened before the next step.

ASSEMBLY DRAWING

1. Wooden Joist
2. Approved (CSA for Canada and UL for U.S.) ceiling fan box (not provided)
3. Ceiling
4. J-Hook
5. Rubber Gasket
6. Screws & Lock Washers (set of 4)
7. Mounting Bracket c/w Ground Wire
8. Outlet Box Screws (not provided)
9. Lock Pin
10. Hemisphere Jam Screw
11. Hemisphere
12. Downrod c/w Ground Wire
13. Ceiling Canopy
14. Bolt
15. Motor Assembly
16. Jam Screws
17. Flat Washer
18. Cotter Pin
19. Blade Bracket screws
20. Flat Washer
21. Fibre Washer
22. Fibre Bracket Gasket
23. Blade Bracket
24. Blade
25. Lock Washer
26. Motor Screw

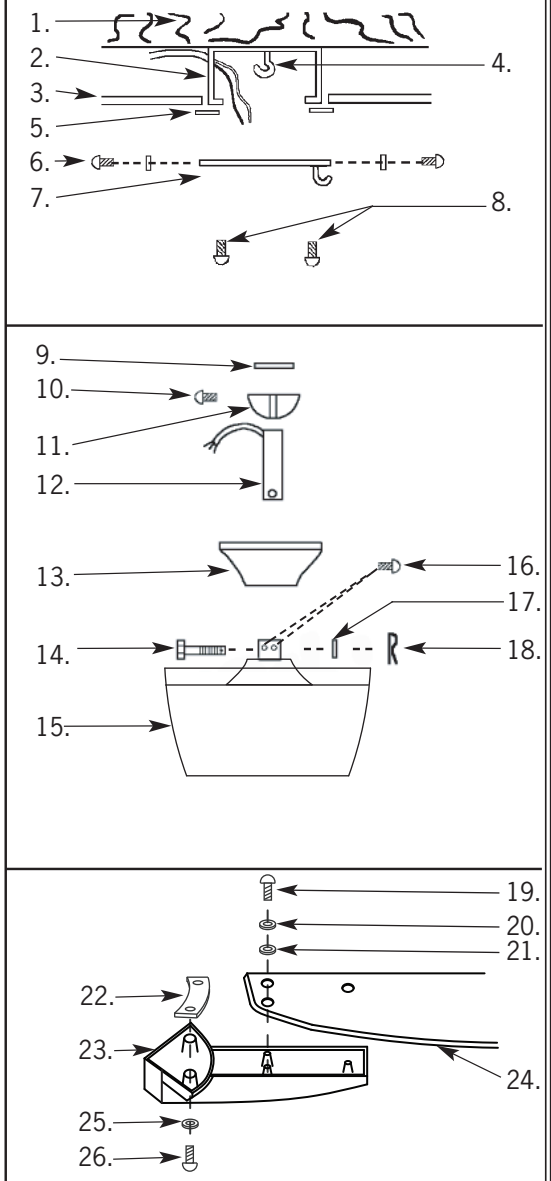

Fig. 1

INSTALLATION

NOTE: All set screws must be checked and retightened where necessary, before and after installation.

1.

A LIGHT KITS

WARNING: BE SURE TO TURN OFF POWER BEFORE INSTALLING

- Install the glass before mounting to ceiling.
- Install the glass to the fan with rubber washer, flat washer and screw.
- Install proper wattage and type of bulb identified on light kit or shade.

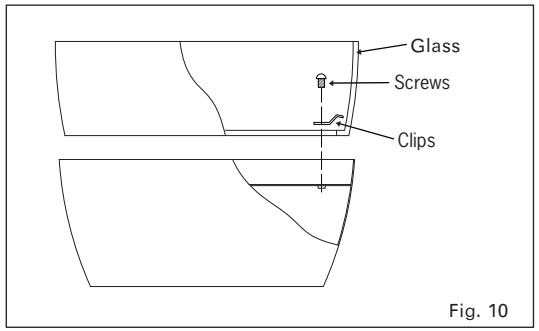

Fig. 10

B MOUNTING

- Using a Philips screwdriver loosen the two upper jam screws on the yoke.
- Position downrod inside canopy.
- Route wires exiting yoke on motor through ceiling canopy and downrod.
- Position downrod/canopy into yoke and align holes in yoke and downrod.
- Insert bolt through hole in yoke and downrod. ***"Be careful not to damage or cut the fan wires."***
- Tighten flat washer and bolt, Secure with cotter pin through hole in the end of the bolt.
- Secure downrod in position by tightening upper jam screws.

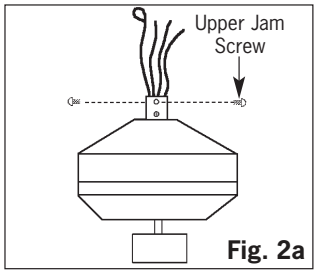

Fig. 2a

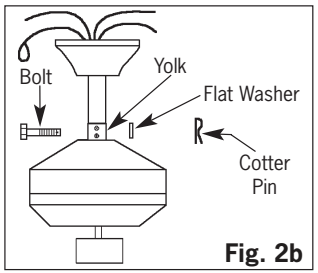

Fig. 2b

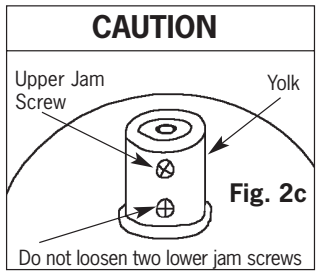

Fig. 2c

6. MOUNT BLADE BRACKETS TO BLADES

- Take out hardware package.
- Place blade bracket screw through flat washer, fibre washer and blade.
- Align with corresponding hole in blade bracket.
- Repeat with (2) remaining screws and tighten.

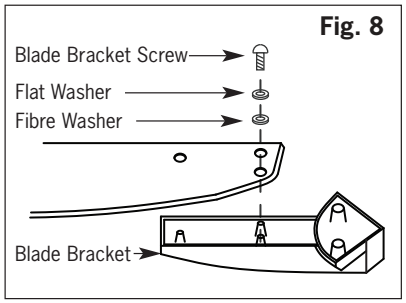

Fig. 8

4. MOUNTING FAN ASSEMBLY

- Place two screws and washers on mounting plate (marked B on diagram) which correspond with slots in canopy. Screw in two turns.
- Position canopy to mounting plate aligning slots to screws (marked B on diagram) then turn to lock.
- Position and tighten the two screws and washers (marked A on diagram) then tighten the two screws (marked B on diagram).

5. ENGAGE HEMISPHERE (Downrod Mount Only)

- Carefully rotate fan assembly until groove in hemisphere locks over tab of canopy assembly.

WARNING: Failure to seat tab in groove could cause damage to electrical wires and possible shock or fire hazard.

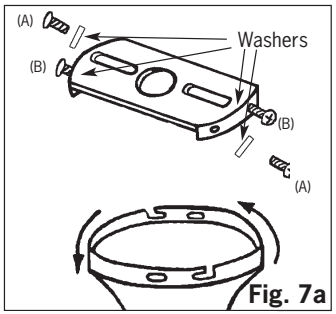

Fig. 7a

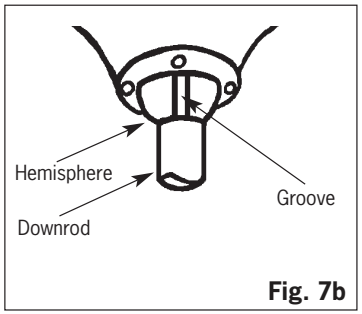

Fig. 7b

NOTE: When installing fan on sloped ceiling, make sure tab on hanger bracket faces towards the top of the slope. Depending on the slope, a longer downrod may be required to prevent fan blades from hitting the ceiling.

2. INSTALL MOUNTING BRACKET

WARNING: To Reduce The Risk Of Fire, Electric Shock, Or Personal Injury, Mount To UL/CSA Listed Outlet Box Marked Acceptable for Fan Support And Use Mounting Screws Provided With The Outlet Box.

- Install J-Hook through centre of outlet box and into the wooden joist.
- Secure mounting bracket and rubber gaskets to outlet box.
- Hang the safety cable onto the J-hook.
- Hang fan on temporary hook and install safety cable.

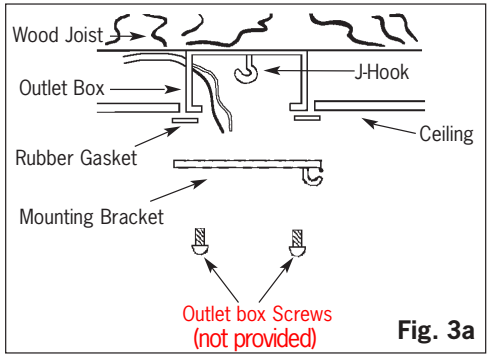

Fig. 3a

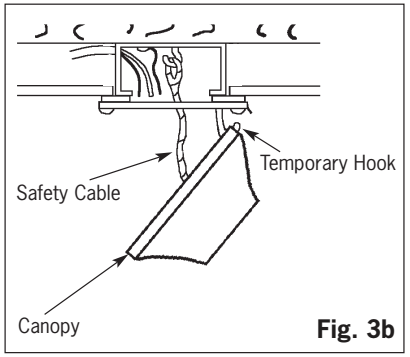

Fig. 3b

3. ELECTRICAL HOOK-UP

- This fan is equipped with a remote control unit for controlling the fan speeds and light kit.

A Setting the code on the hand-held remote and the receiver.

- remove the battery cover on the hand-held remote (Press firmly below the arrow and slide the battery cover off).
- set code switches to desired position.
- set the code switches to the same positions on the receiver as set on the remote.

Fig. 4

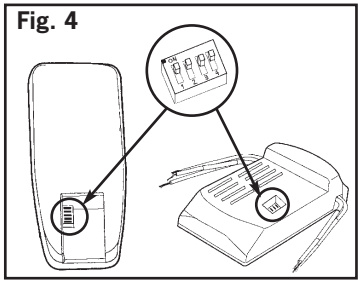

3. ELECTRICAL HOOK-UP

B Make the following wire connections to the receiver unit (see fig. 5) using the wire nuts supplied.

- connect GREEN fan wire to BARE (ground) wire.
- connect BLACK receiver unit wire to BLACK supply wire.
- connect WHITE receiver unit wire to WHITE supply wire.
- connect WHITE receiver unit wire (MOTOR N) to WHITE fan wire.
- connect BLACK receiver unit wire (MOTOR L) to BLACK fan wire.
- connect BLUE receiver unit wire (FOR LIGHT) to BLUE light wire.
- After making the wire connections, ensure the wires should be spread apart with the grounded conductor and the equipment-grounding conductor on one side of the outlet box and the ungrounded conductor on the other side of the outlet box.
- Ensure the splices after being made should be turned upward and pushed carefully up into the outlet box.

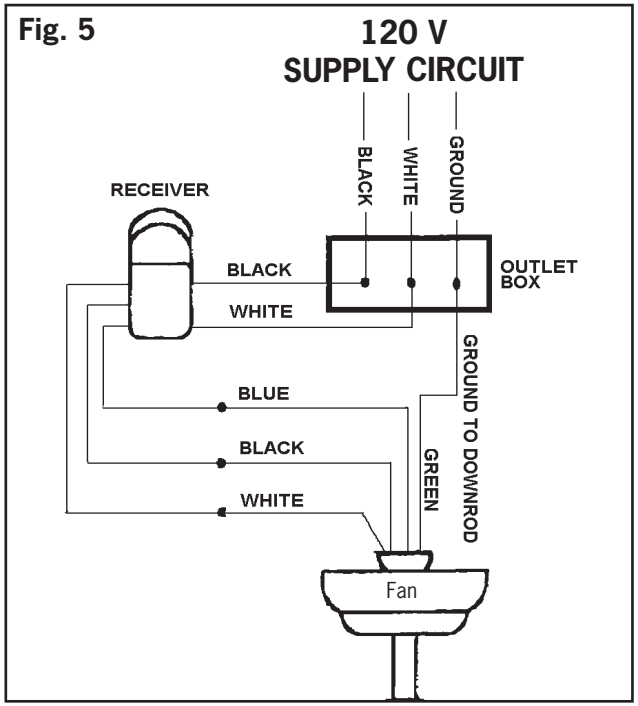

In Quebec, the installation of this product must be carried out by a qualified electrician.

3. ELECTRICAL HOOK-UP

NOTE: Once ground wires are connected, carefully tuck all wires and marrettes into the metal outlet box making sure that the wires are clear of the hemisphere and downrod when positioned in mounting bracket.
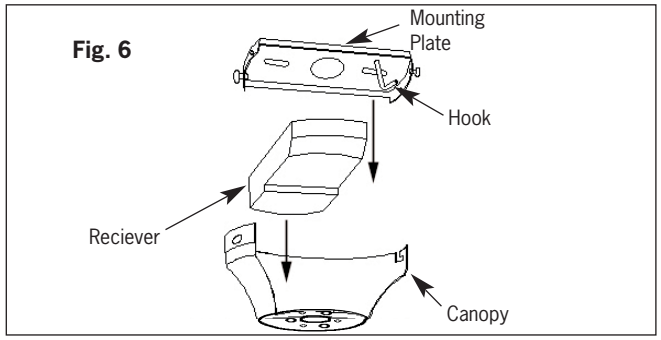
C
- Push all connected wires up into ceiling box.
- Position the receiver into the canopy as shown direction.