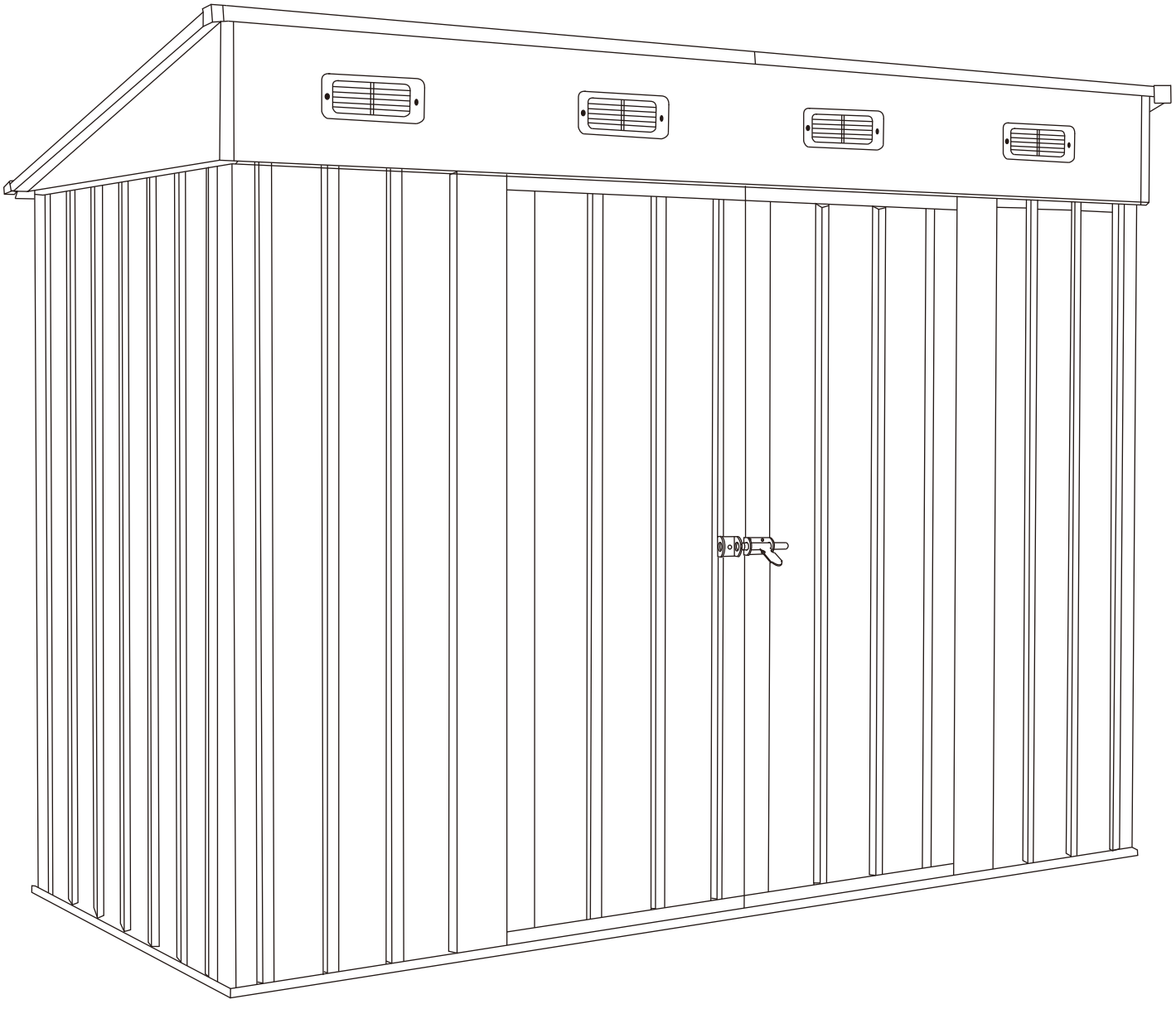

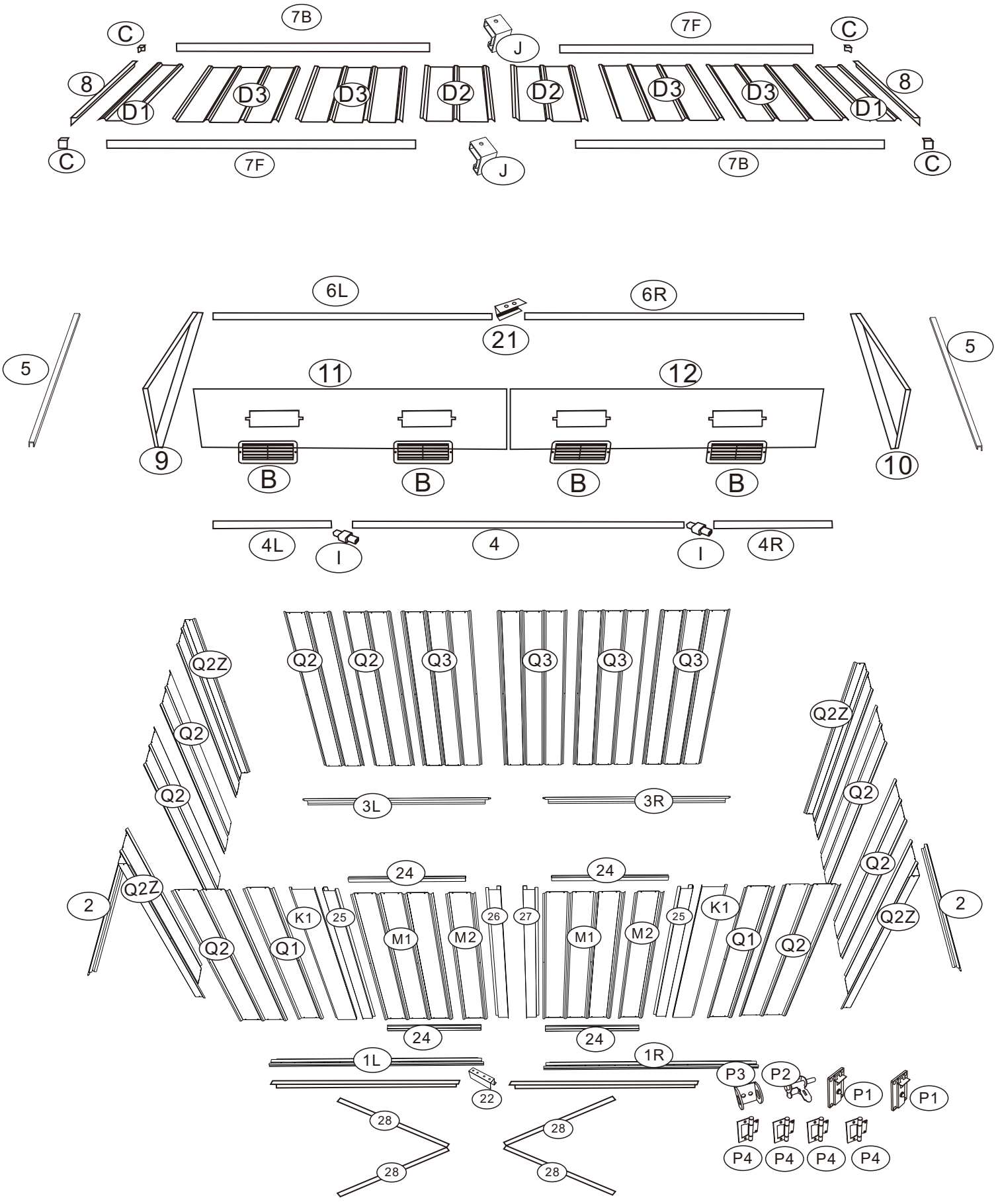
7B
C
J
7F
C
8
D1
D3
D3
D2
D2
D3
D3
D1
8
C
7F
J
7B
C
6L
6R
21
5
11
12
5
9
B
B
B
B
10
4L
I
4
I
4R
Q2Z
Q2
Q2
Q2
Q2
Q3
Q3
Q3
Q3
Q2Z
3L
3R
24
24
2
Q2Z
K1
25
26
27
25
K1
2
Q2
Q1
M1
M2
M1
M2
Q1
Q2
Q2Z
24
24
1L
1R
P3
P2
P1
P1
22
28
28
28
28
P4
P4
P4
P4

PART	NO.	QTY
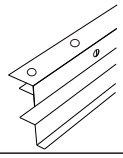	1L	1
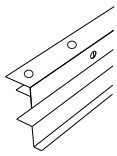	1R	1
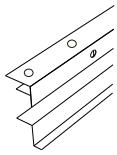	2	2
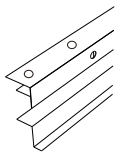	3L	1
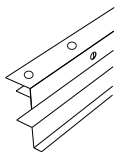	3R	1
	4	1
	4L	1
	4R	1
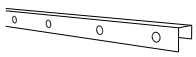	5	2
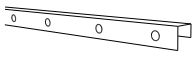	6L	1

PART	NO.	QTY
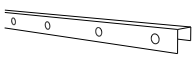	6R	1
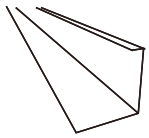	7B	2
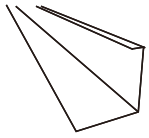	7F	2
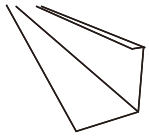	8	2
	9	1
	10	1
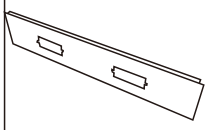	11	1
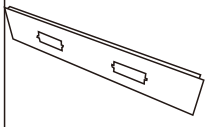	12	1
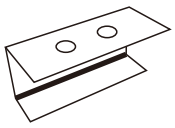	21	1
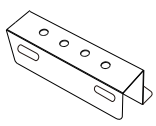	22	2

PART	NO.	QTY
	24	4
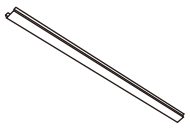	25	2
	26	1
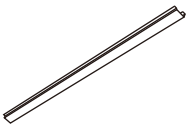	27	1
	28	4
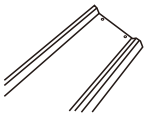	Q1	2
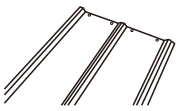	Q2	8
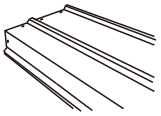	Q2Z	4
	Q3	4
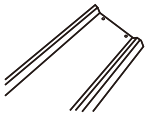	D1	2

PART	NO.	QTY
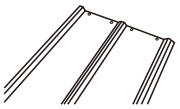	D2	2
	D3	4
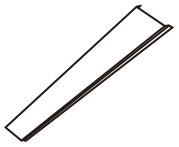	K1	2
	M1	2
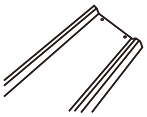	M2	2
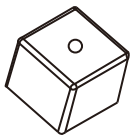	C	4
	B	4
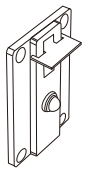	P1	2
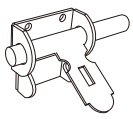	P2	1
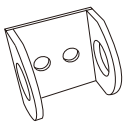	P3	1

PART	NO.	QTY
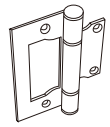	P4	4
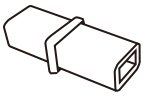	I	2
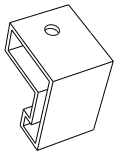	J	2
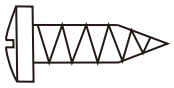	S1	266
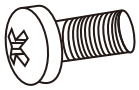	S2	80
	S3	286
	S4	80
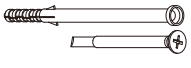	S6	4
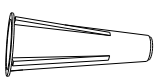	S7	26
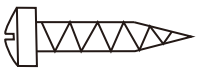	S8	2

1

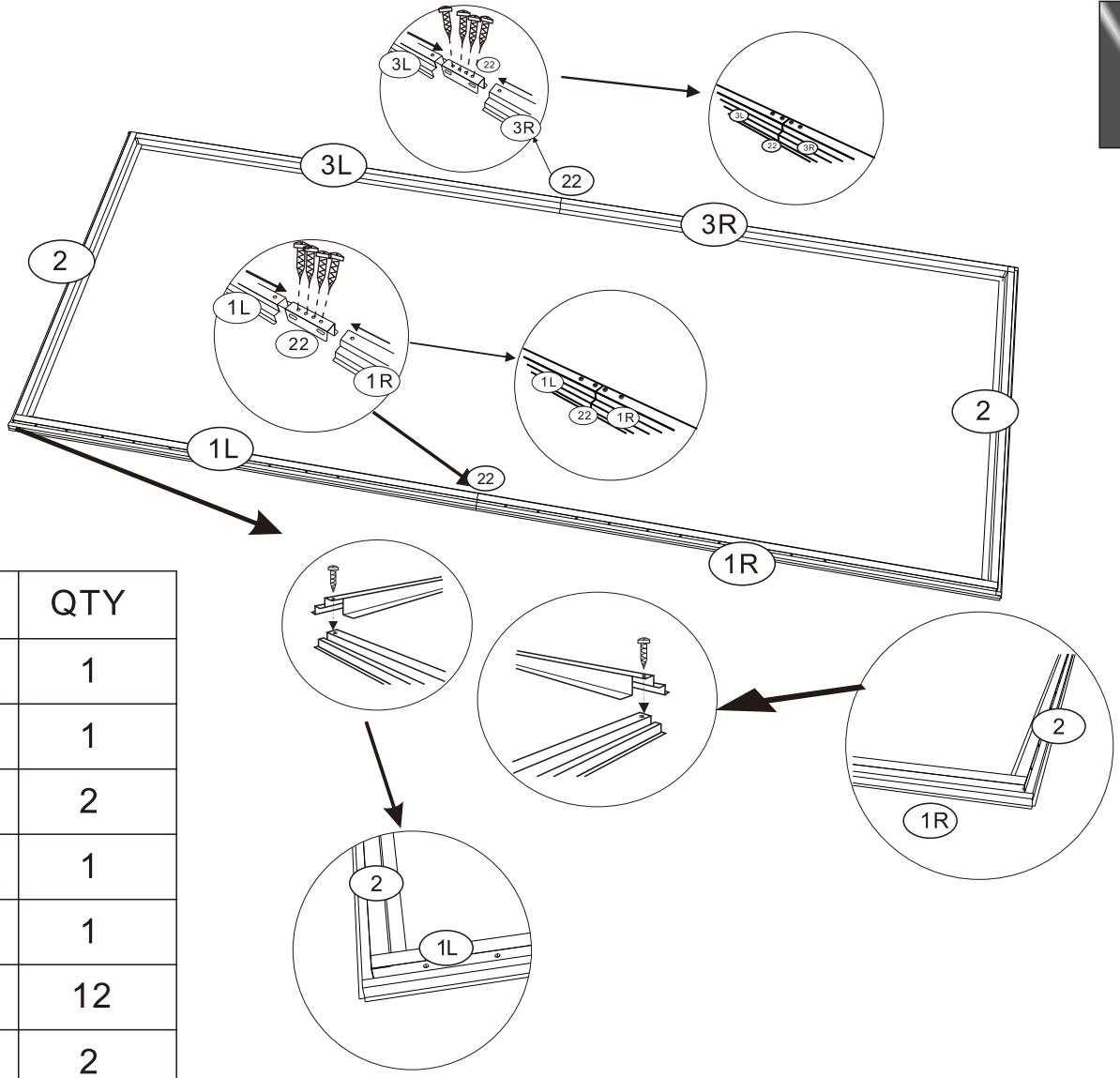

PART	NO.	QTY
	1L	1
	1R	1
	2	2
	3L	1
	3R	1
	S1	12
	22	2

2

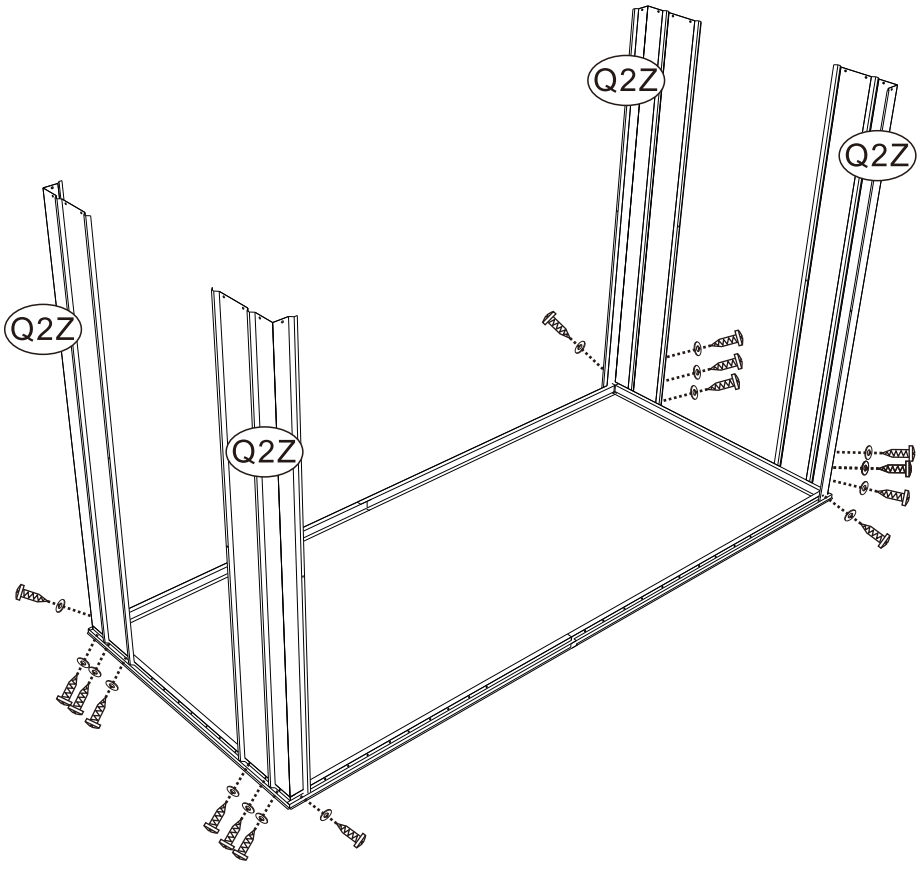

PART	NO.	QTY
	Q2Z	4
	S1	16
	S3	16

3

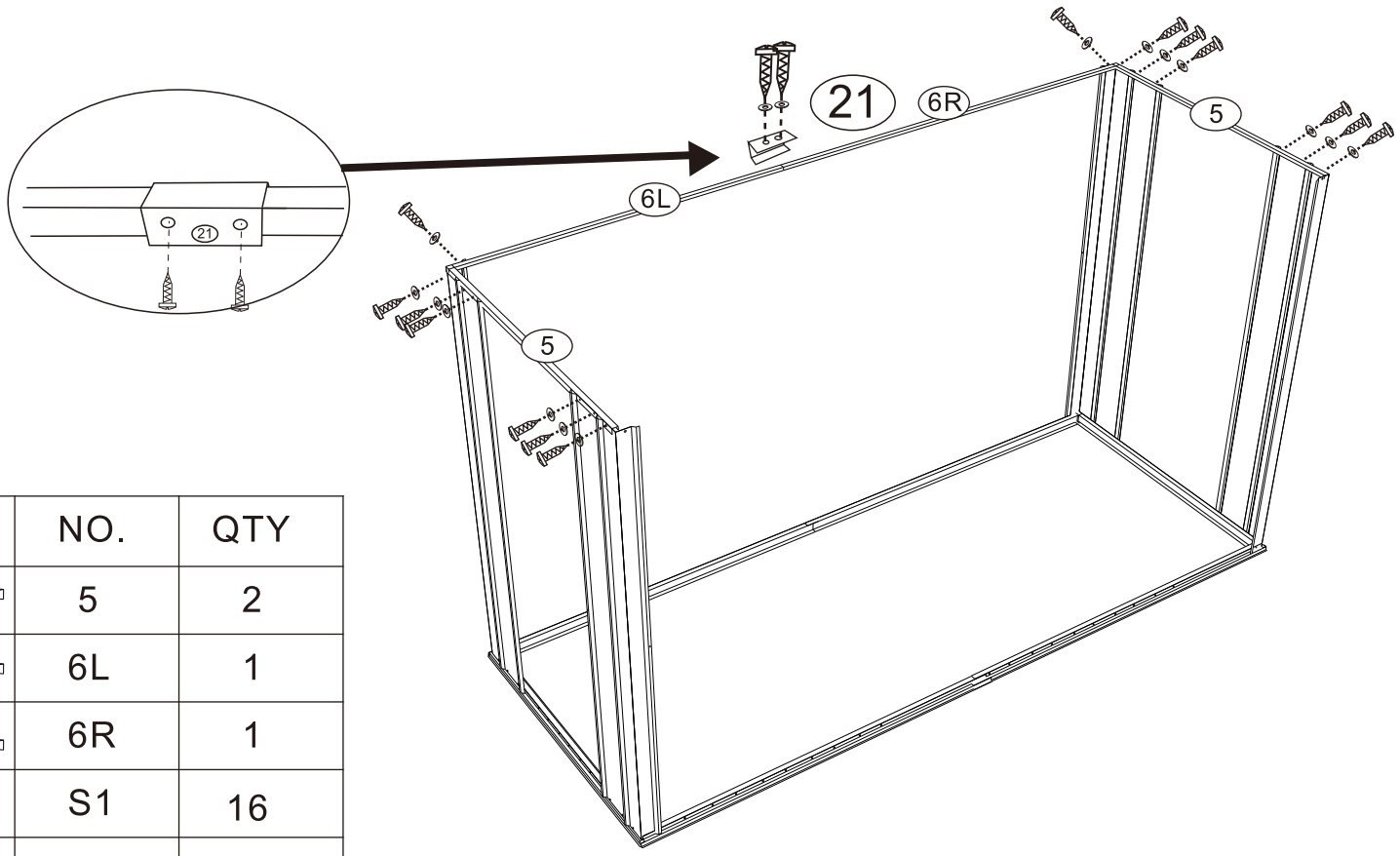

PART	NO.	QTY
	5	2
	6L	1
	6R	1
	S1	16
	S3	16
	21	1

4

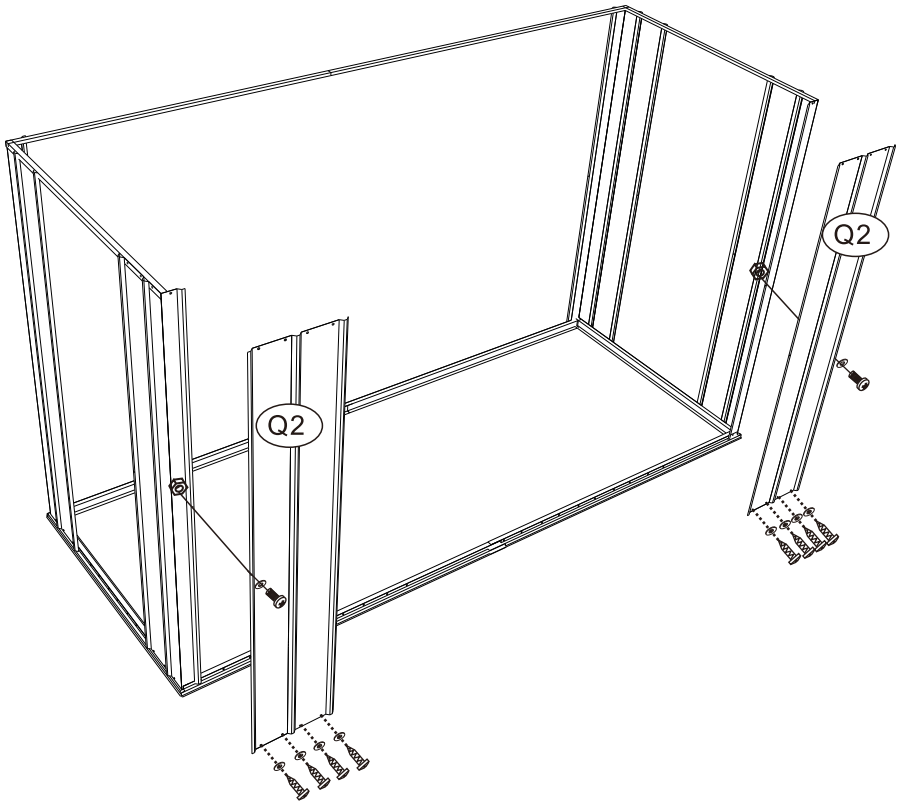

PART	NO.	QTY
	Q2	2
	S1	8
	S2	2
	S3	10
	S4	2

5

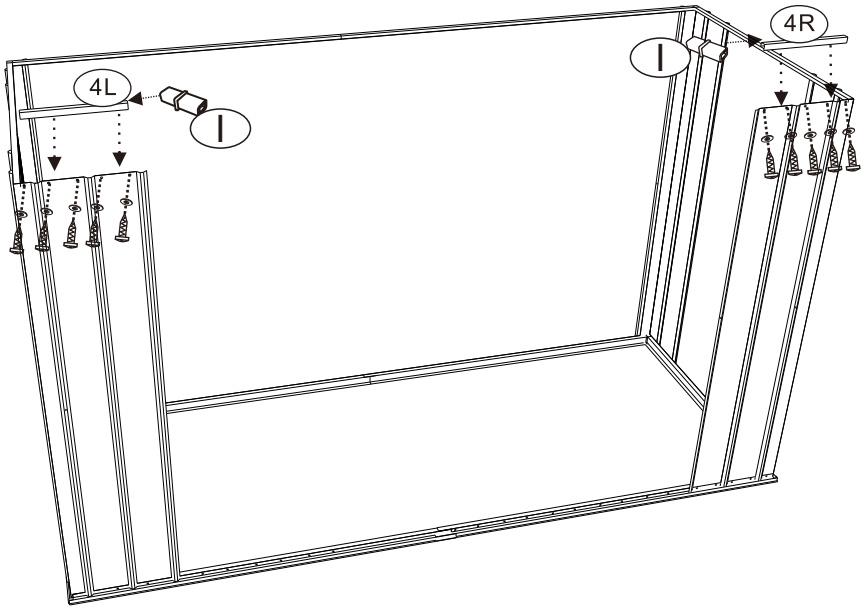

PART	NO.	QTY
	4L	1
	4R	1
	S1	10
	S3	10
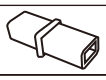	I	2

6

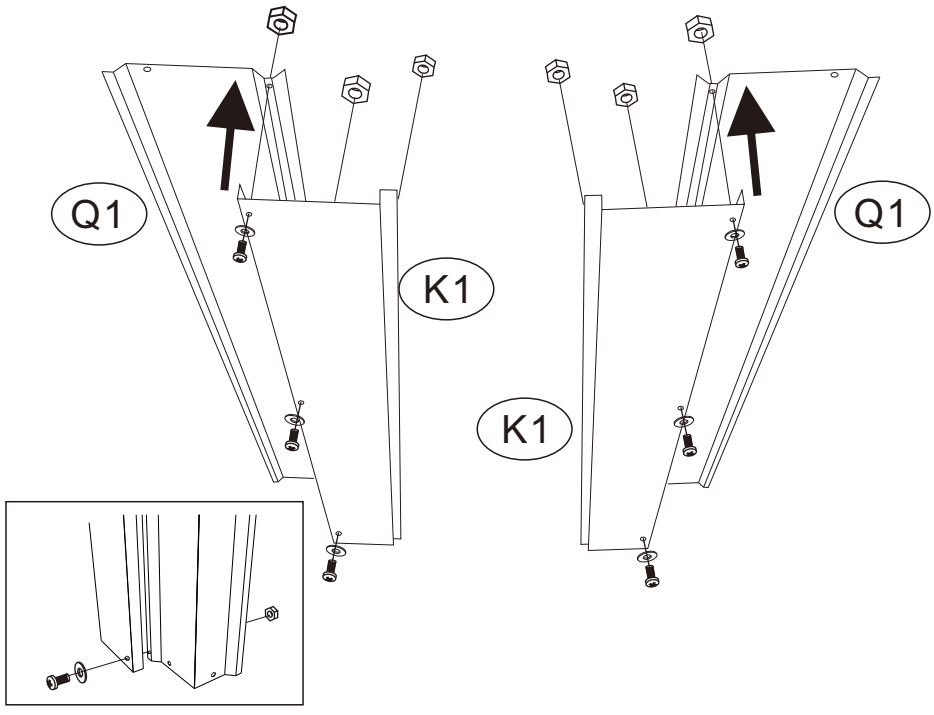

PART	NO.	QTY
	Q1	2
	K1	2
	S2	6
	S3	6
	S4	6

7

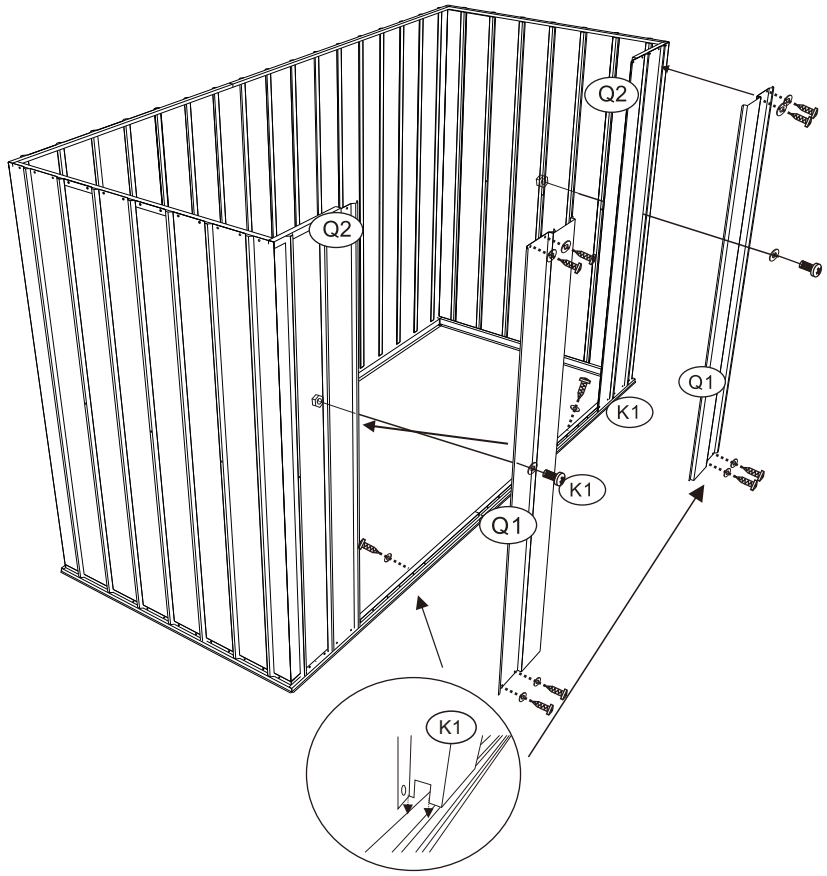

PART	NO.	QTY
	S1	10
	S2	2
	S3	12
	S4	2

8

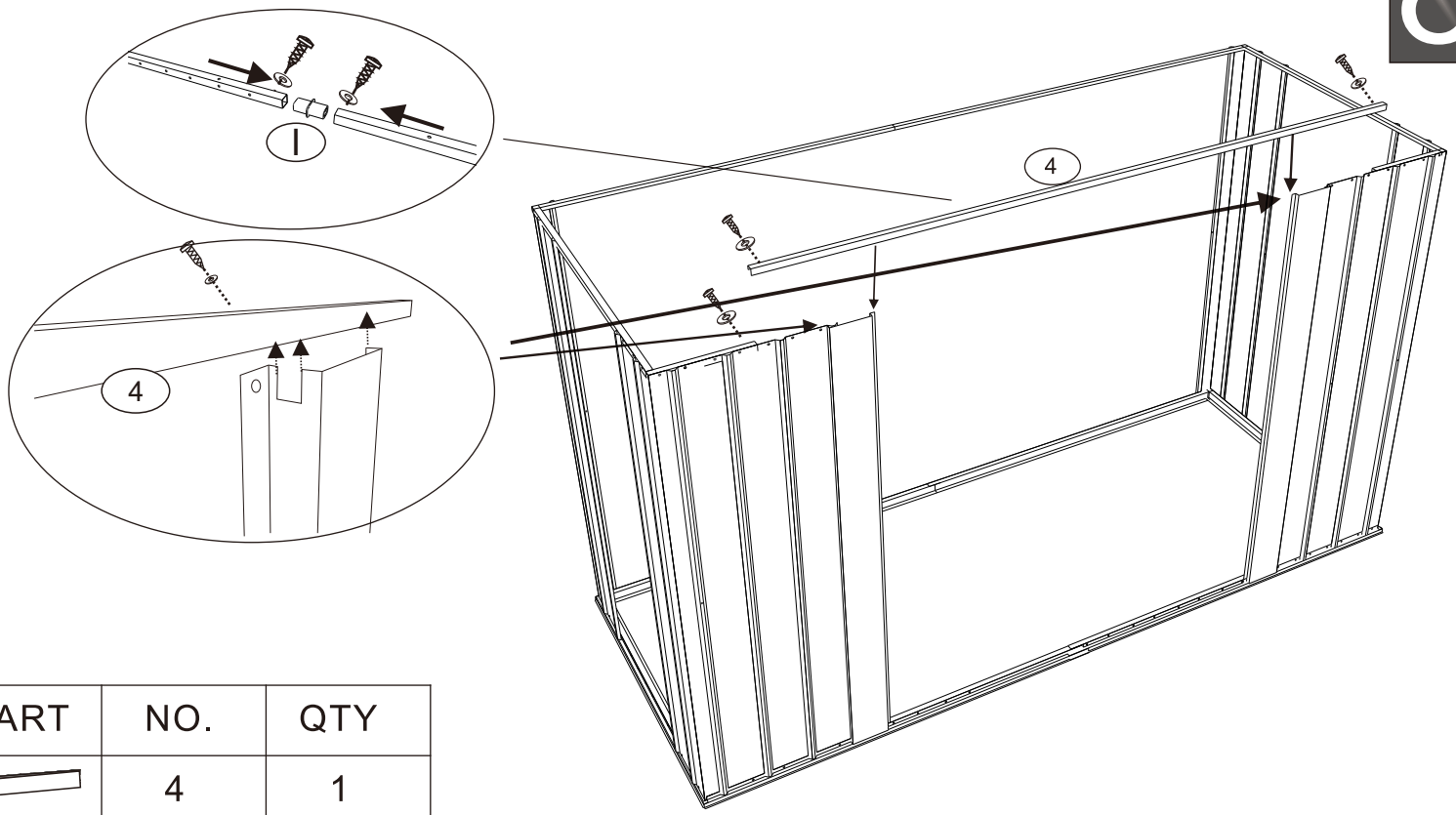

PART	NO.	QTY
	4	1
	S1	6
	S3	6

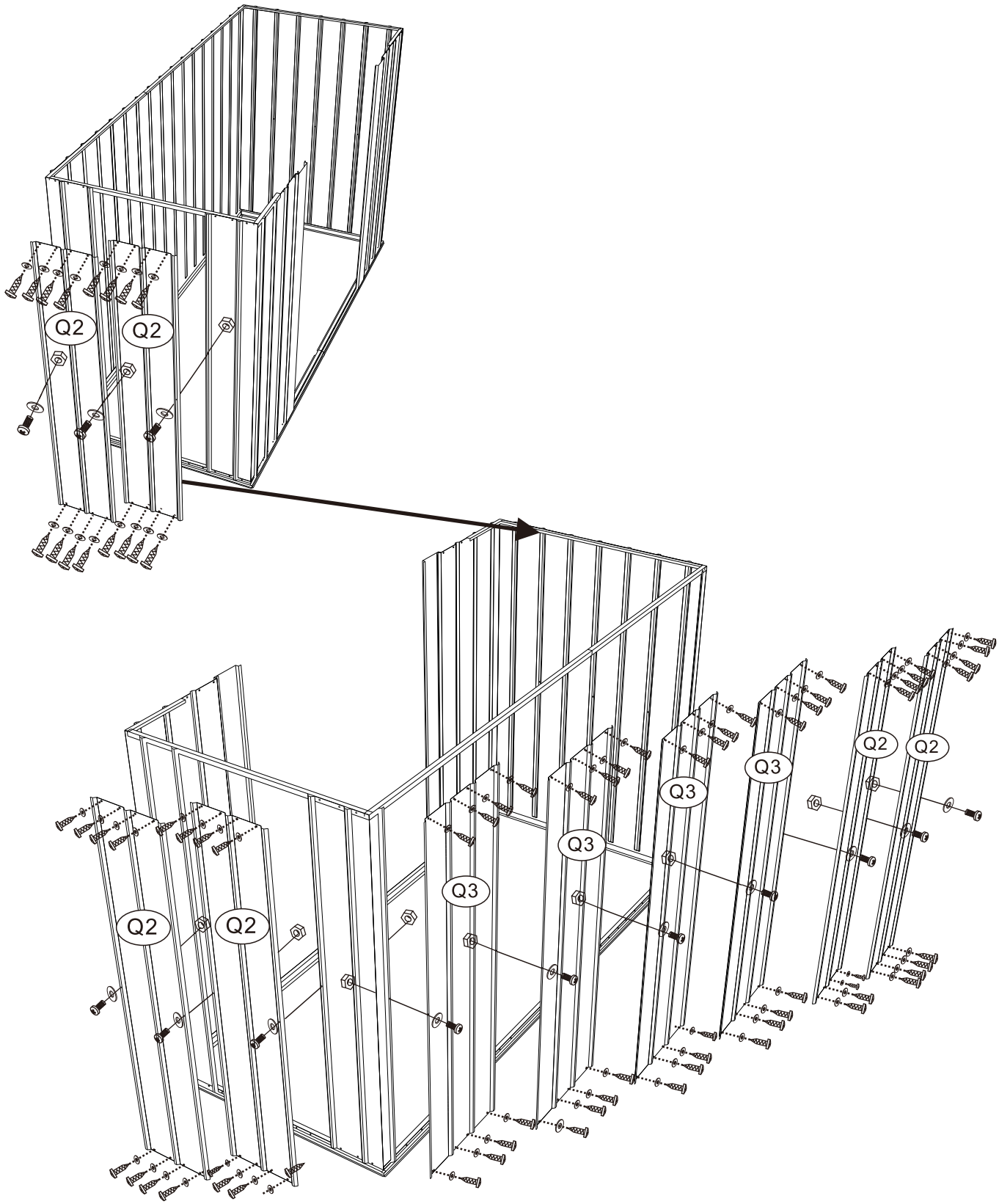

PART.	NO.	QTY
	Q2	6
	Q3	4
	S1	80
	S2	13
	S3	93
	S4	13

10

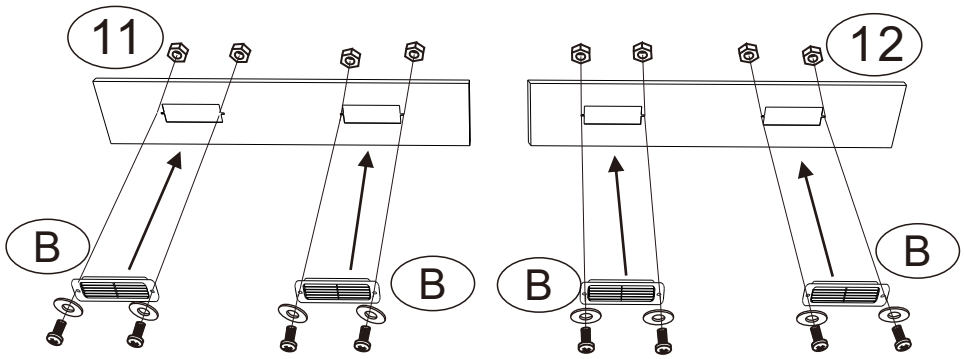

PART	NO.	QTY
	B	4
	11	1
	12	1
	S2	8
	S3	8
	S4	8

11

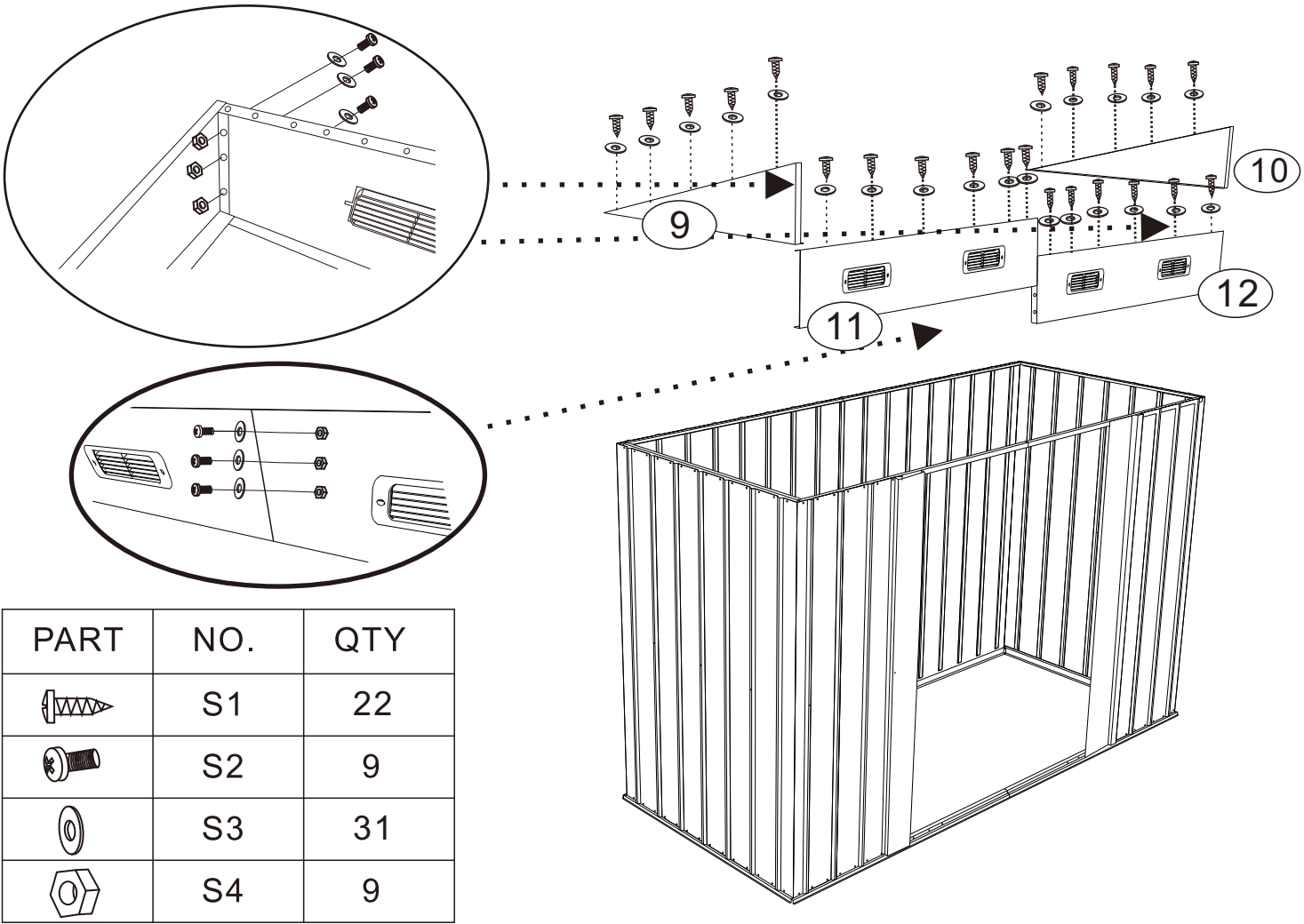

PART	NO.	QTY
	S1	22
	S2	9
	S3	31
	S4	9

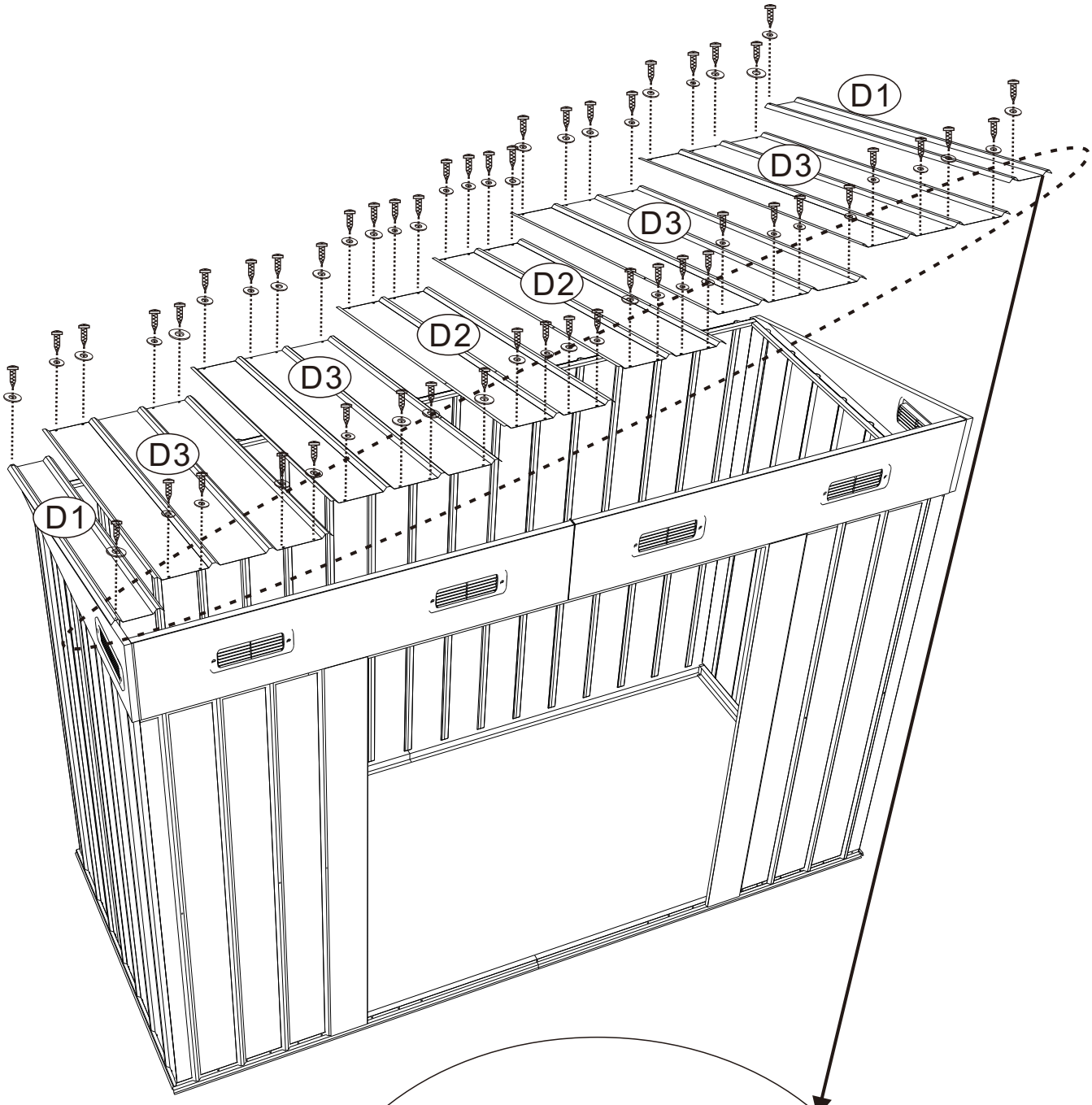

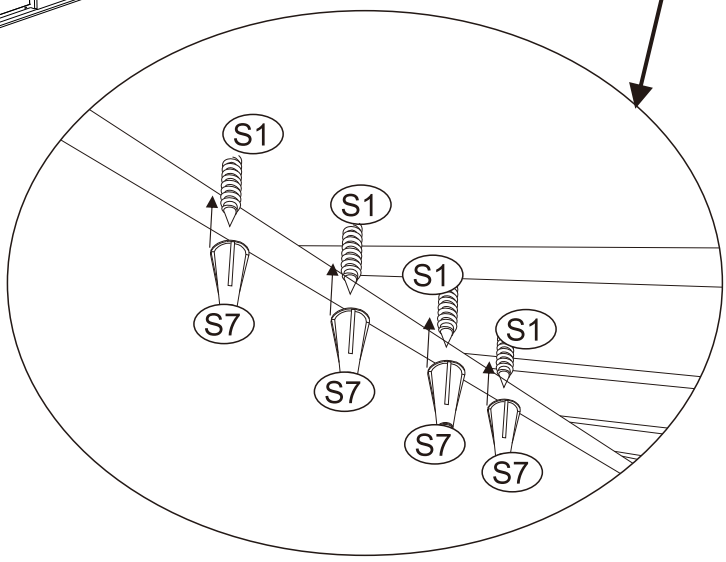

PART	NO.	QTY
	D1	2
	D2	2
	D3	4
	S1	52
	S3	52
	S7	26

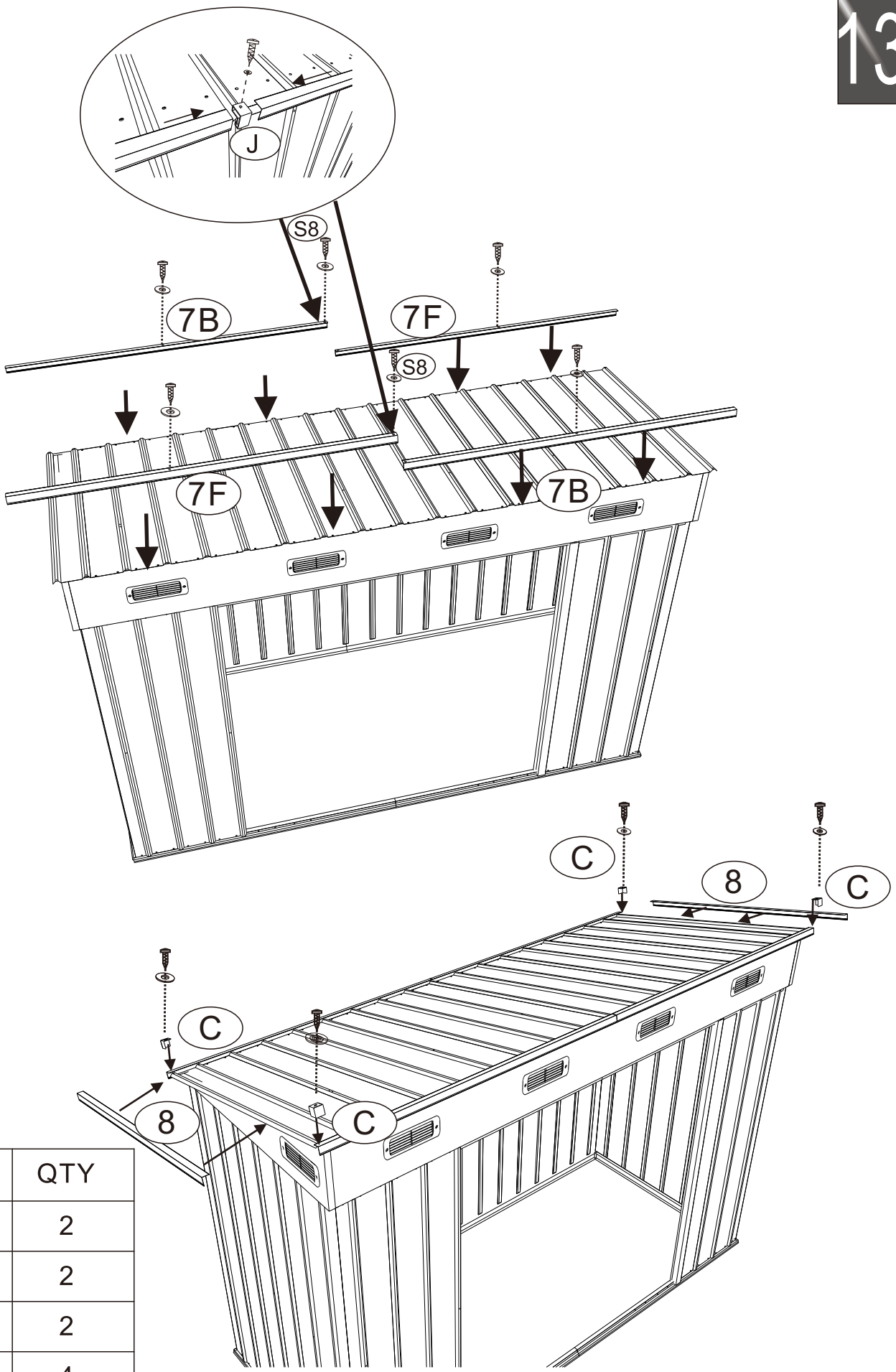

PART	NO.	QTY
	7B	2
	7F	2
	8	2
	C	4
	J	2
	S1	8
	S3	10
	S8	2

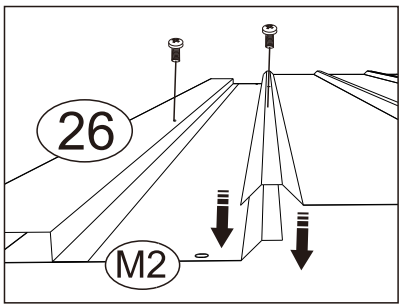

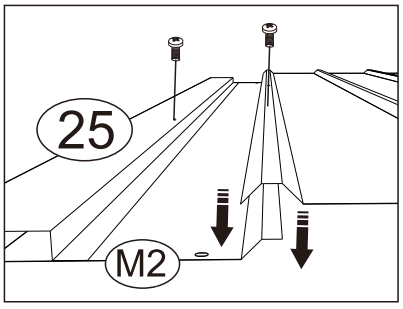

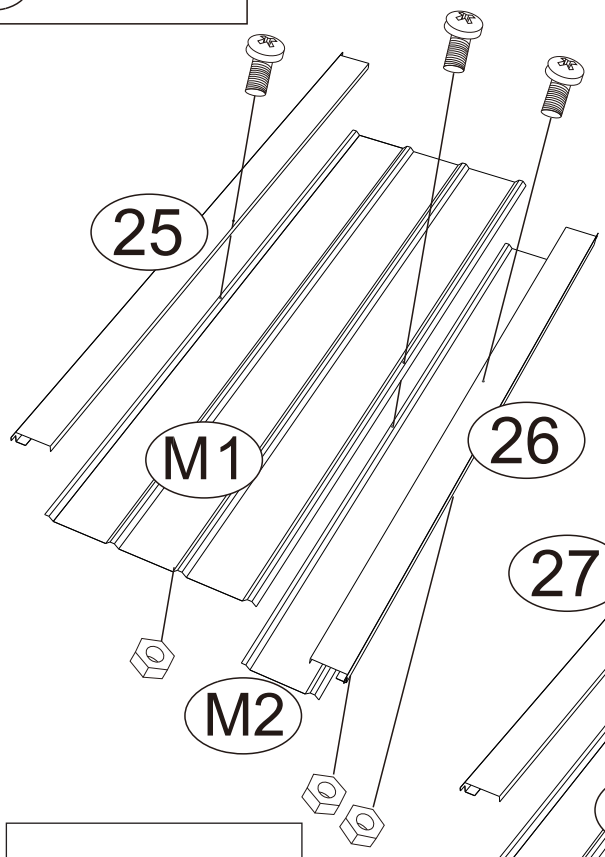

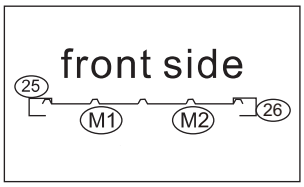

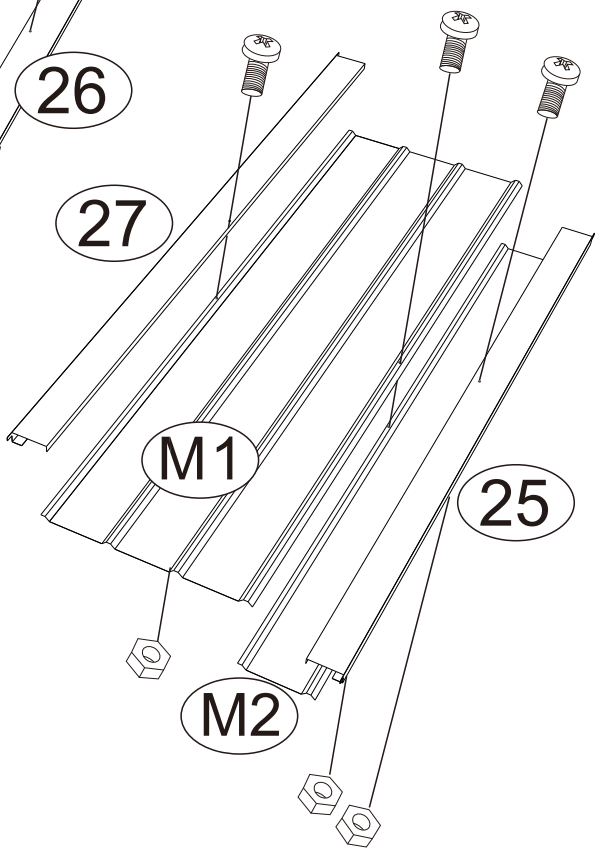

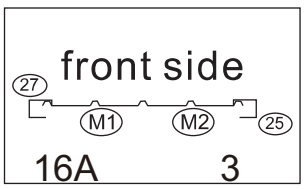

PART	NO.	QTY
	M1	2
	M2	2
	25	2
	26	1
	27	1
	S2	6
	S4	6

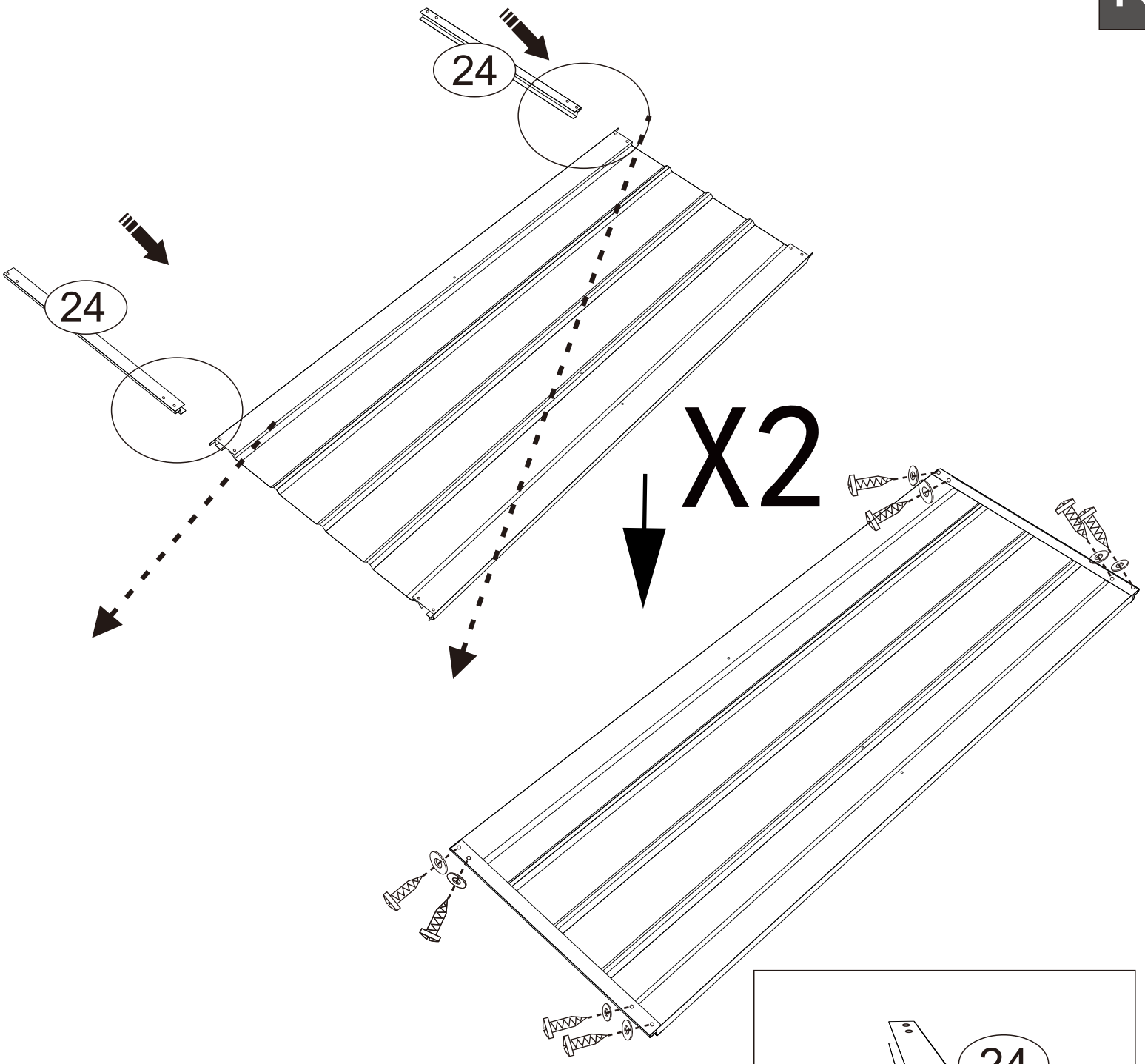

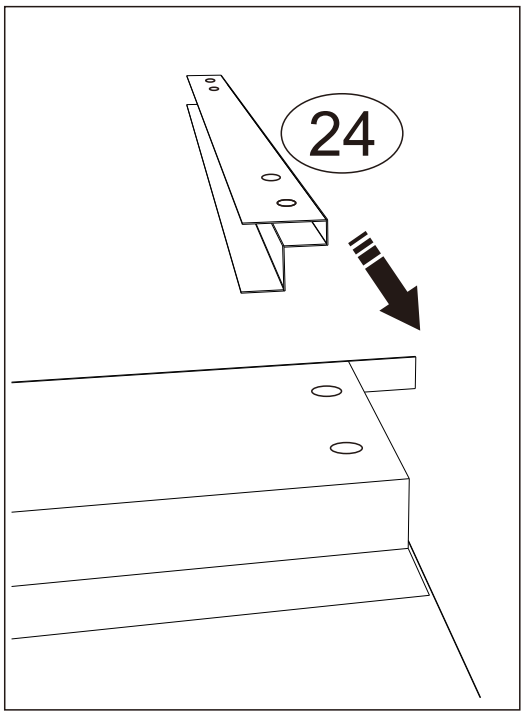

PART	NO.	QTY
	24	4
	S1	16
	S3	16

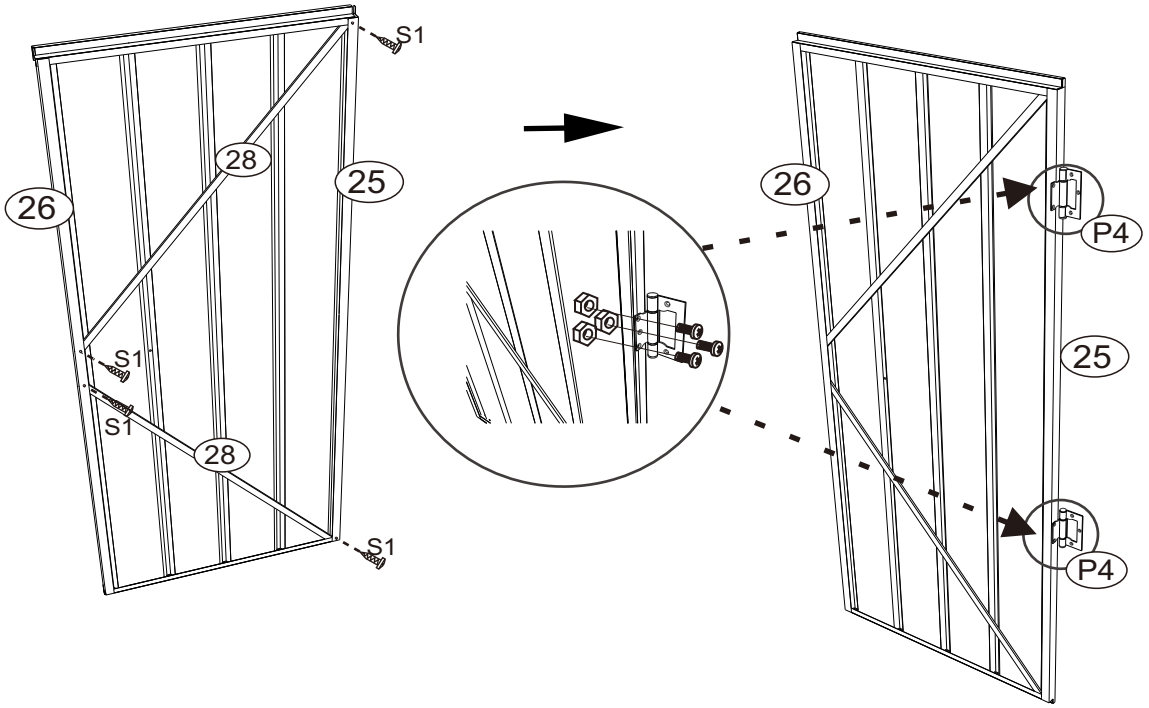

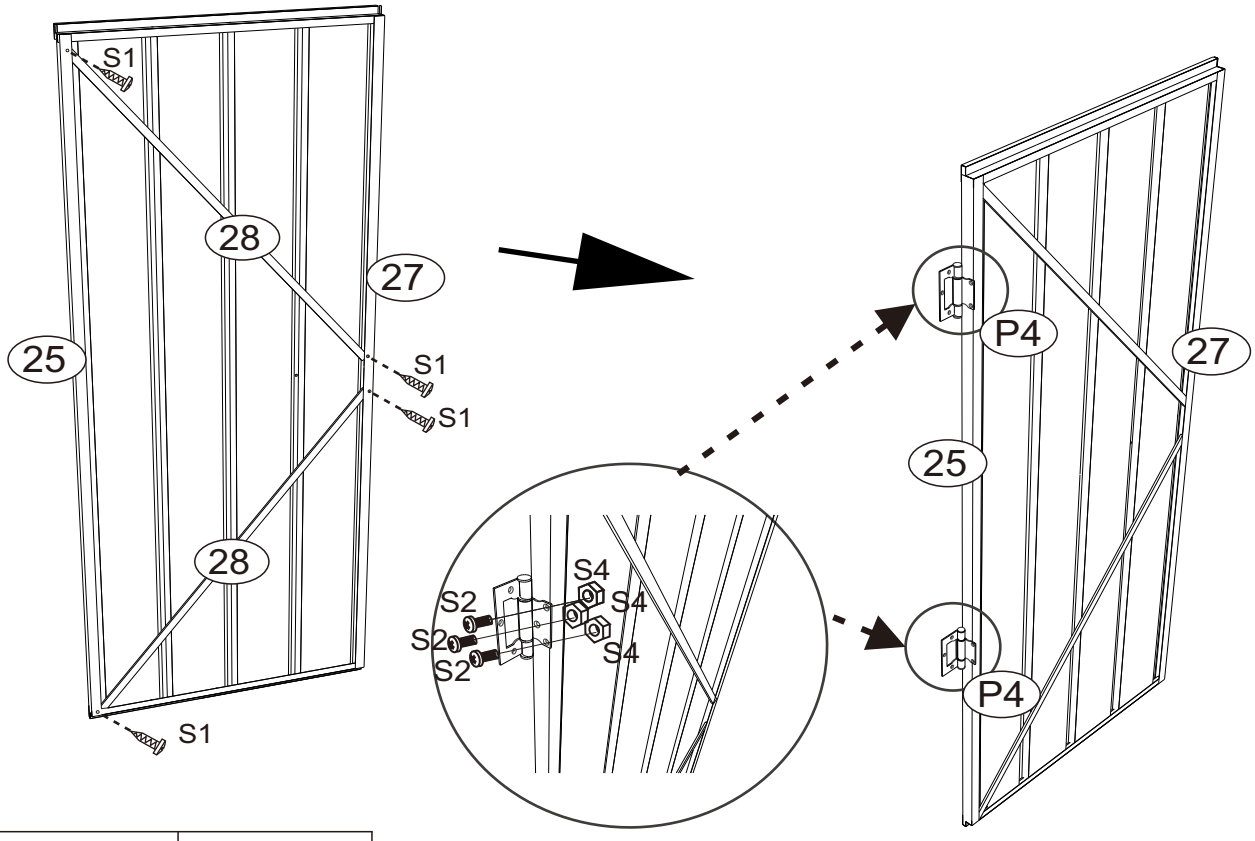

PART	NO.	QTY
	28	4
	P4	4
	S1	8
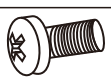	S2	12
	S4	12

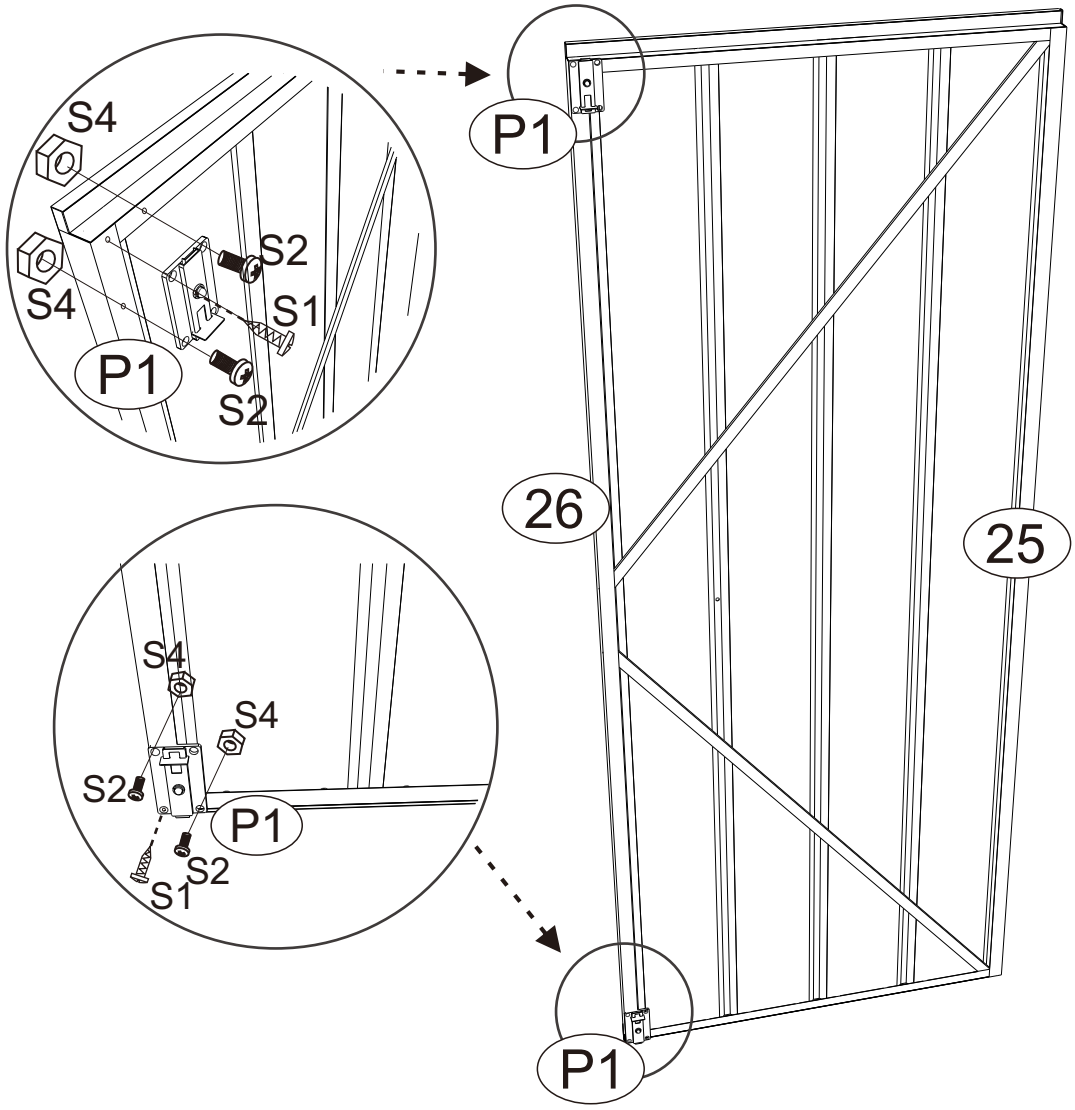

PART	NO.	QTY
	P1	2
	S1	2
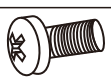	S2	4
	S4	4

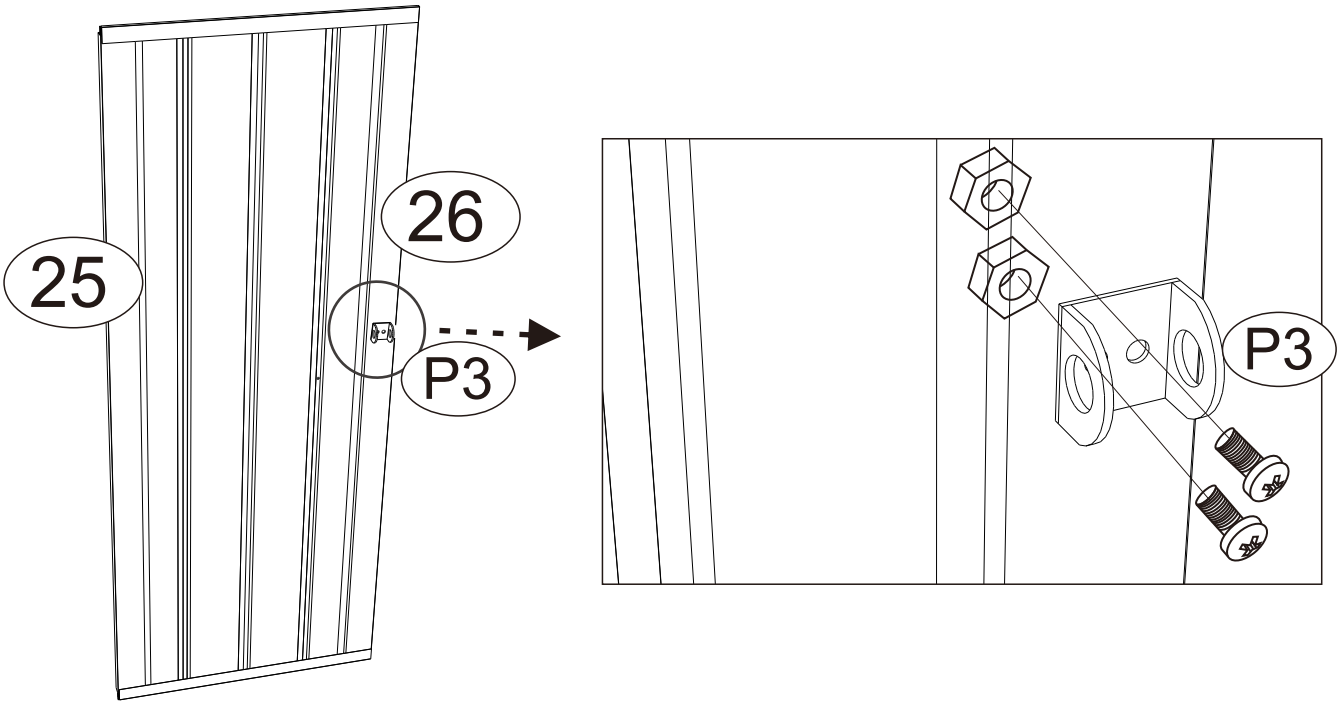

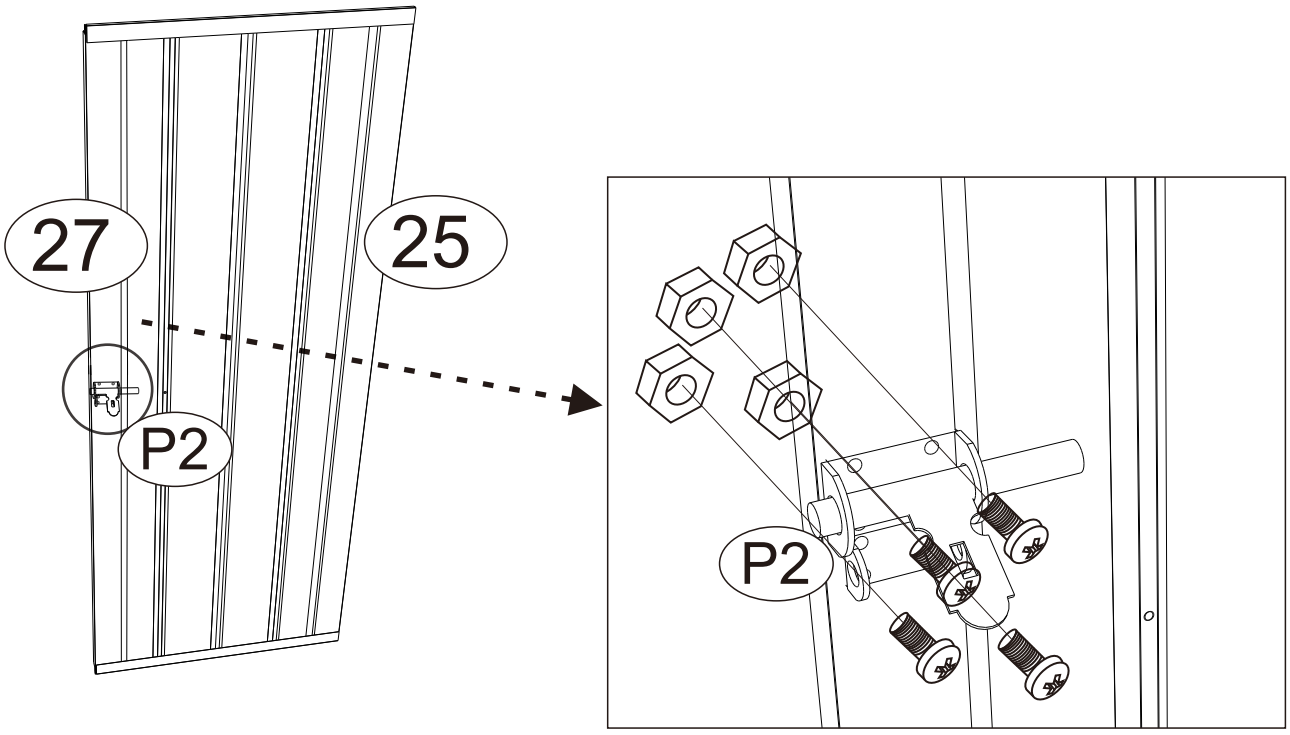

PART	NO.	QTY
	P2	1
	P3	1
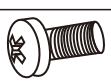	S2	6
	S4	6

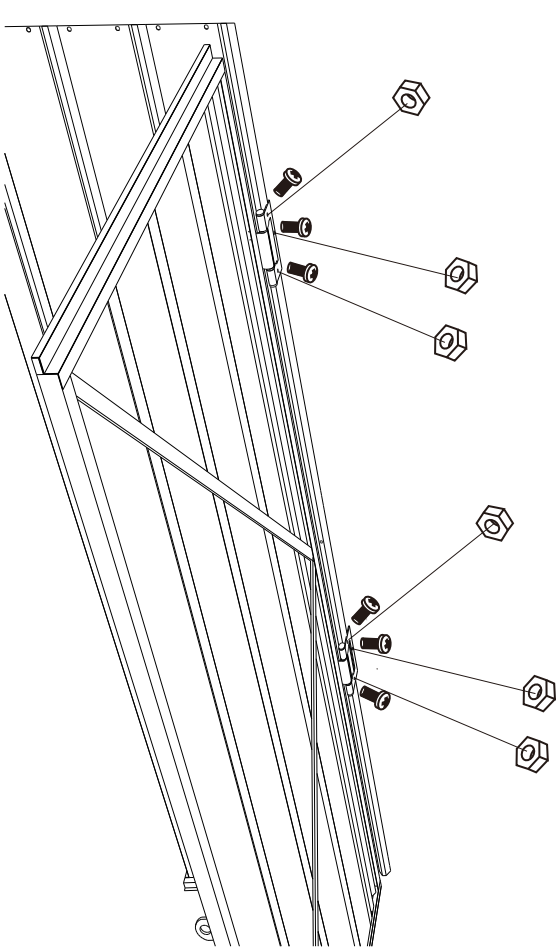

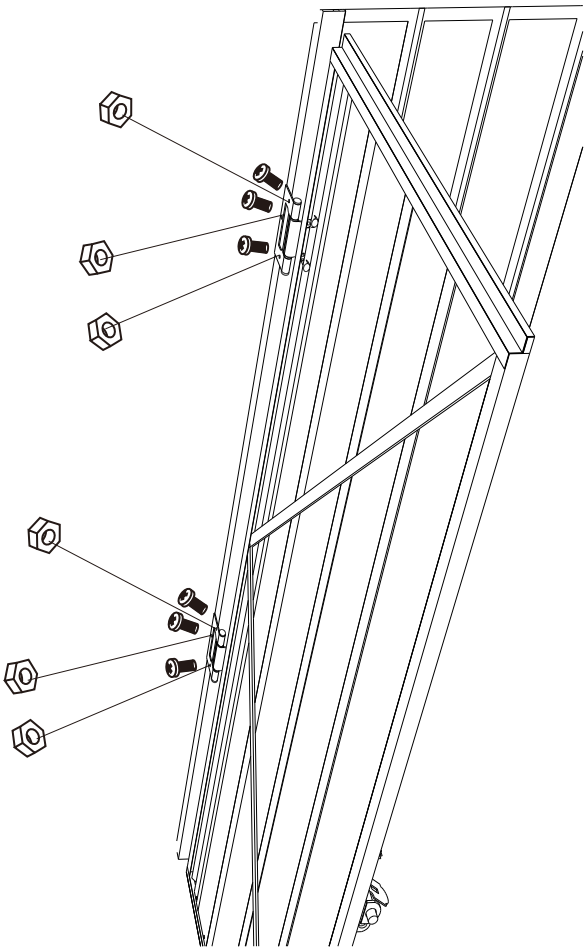

PART	NO.	QTY
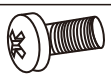	S2	12
	S4	12

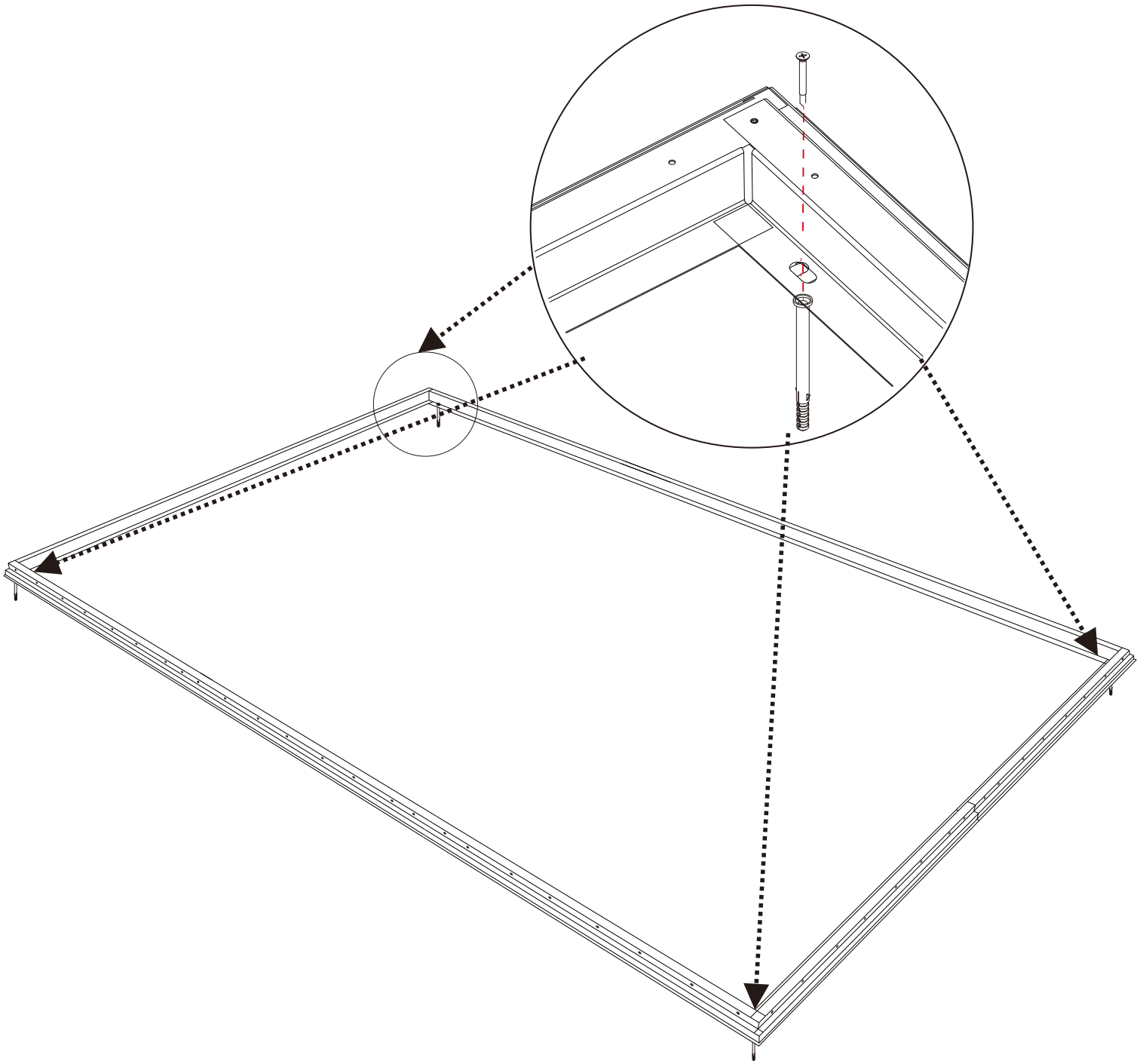

PART	NO.	QTY
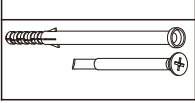	S6	4