FARINI

Assembly Manual

SOFA

SF027

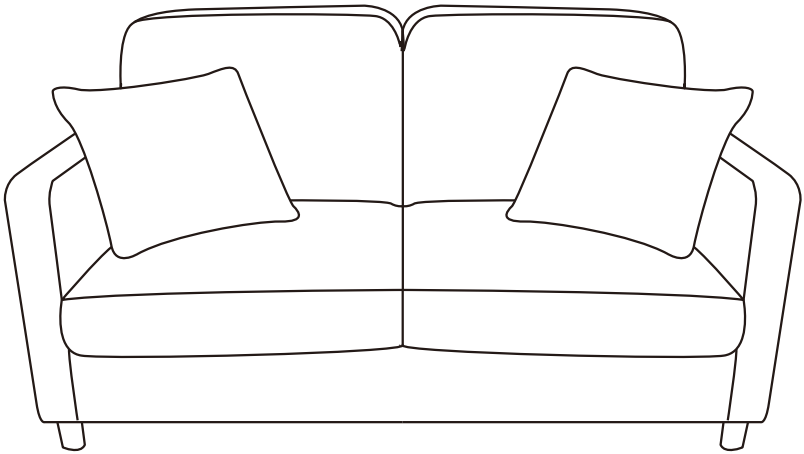

Please read this manual carefully before any operation and keep it properly for future use.

Customer Service：**wf@isunon.com**

Exploded View

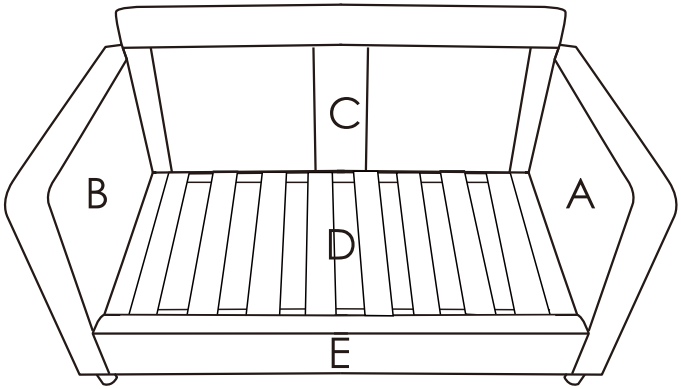

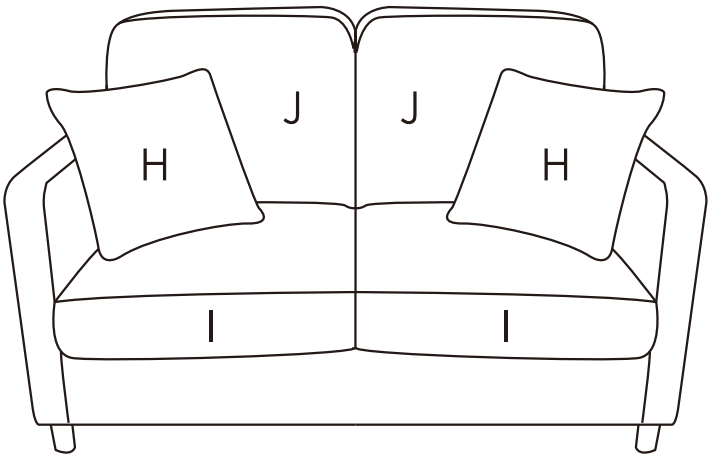

Components List

30min	
Assembly Time	Two People

A	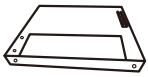 Right handrail	1PC
B	 Left handrail	1PC
C	 Backrest	1PC
D	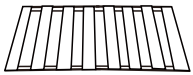 Seat cushion board	1PC
E	 Front seat partition	1PC
a	 Screw M8x20mm	10+1
G	 Backrest support bracket	1PC
H	 Body pillow	2PCS
I	 Seat cushion	2PCS

J	 Cushion	2PCS
c	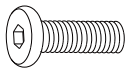 Screw M6x35mm	3+1
d	 Gasket M6x18mm	6PCS
b	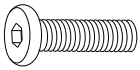 Screw M6x45mm	3+1
N	 Foot	4PCS
O	 Anti-slip pad	4PCS
e	 Wrench	1PC
Q	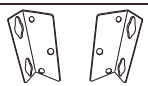 Right-angle bracket	2PCS
S	 Front support bracket	1PC

Note:The number after "+" sign indicates extra piece(s).

Assembly Instruction

STEP1

Rotate the feet(N) with Anti-slip pads(O) into the hole of right handrail(A).

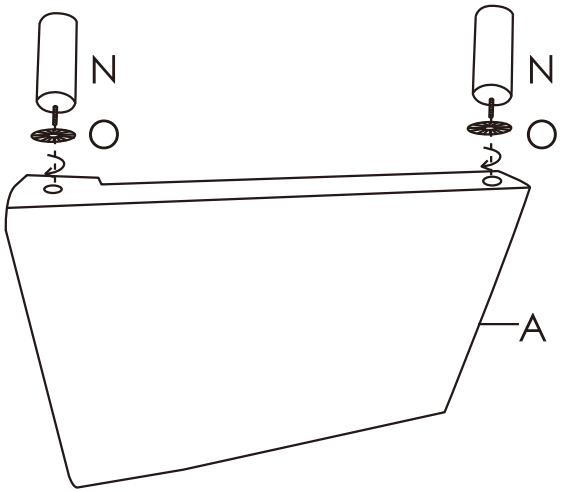

Ax1
Nx2
Ox2

STEP2

Rotate the feet(N) with Anti-slip pads(O) into the hole of left handrail(B).

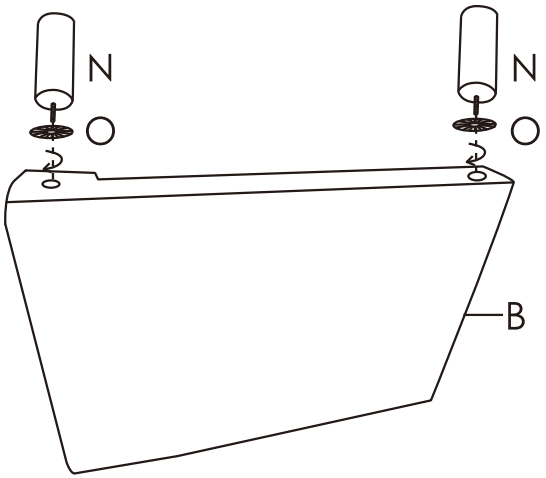

Bx1
Nx2
Ox2

Assembly Instruction

STEP3

Attach backrest support bracket(G) to backrest(C) using gaskets(d) and screws(c).

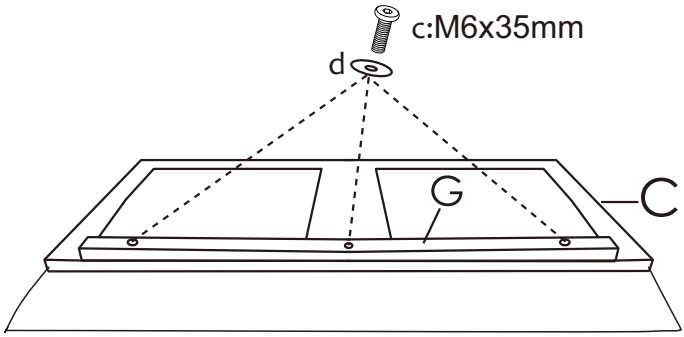

C x 1
G x 1
c x3
d x3
e x 1

STEP4

Attach backrest support bracket(S) to front seat partition(E) using gaskets(d) and screws(a).

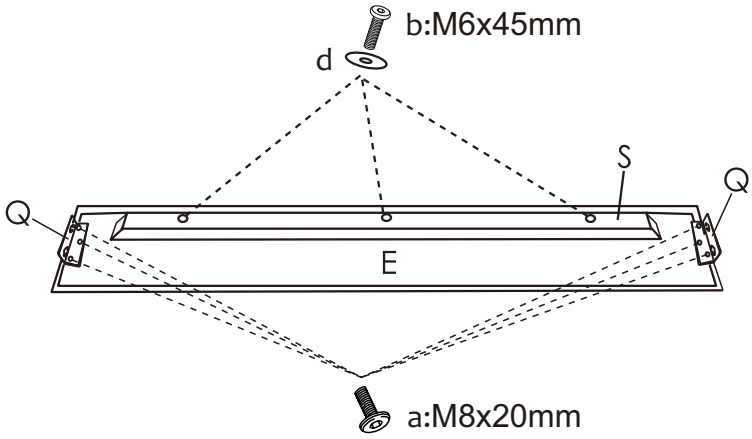

Q x2
a x6
E x 1
S x 1
b x3
d x3
e x 1

Assembly Instruction

STEP5

Connect backrest(C) with right handrail(A) by sliding the side connection.

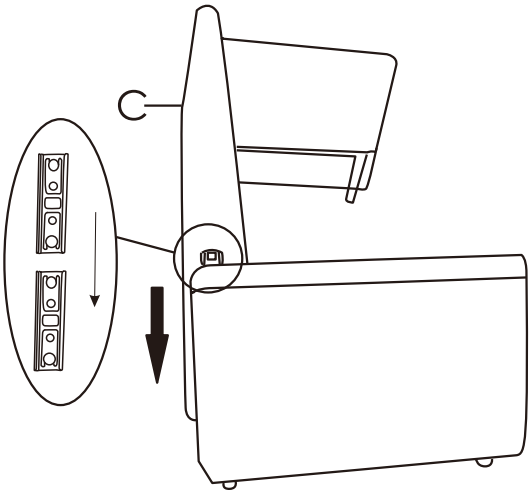

Cx1

STEP6

Connect backrest(C) with left handrail(B) by sliding the side connection.

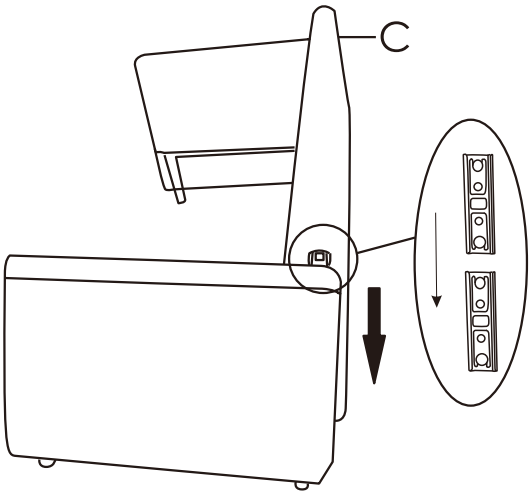

Cx1

Assembly Instruction

STEP7

Attach front seat partition(E) to the handrails using right-angle brackets(Q) and screws(a).

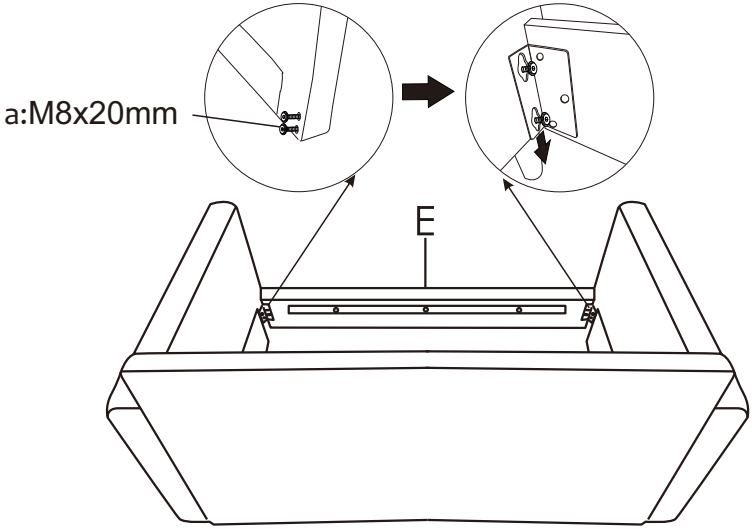

E x1
a x4
e x1

STEP8

Put seat cushion board(D) down to the frame of sofa.

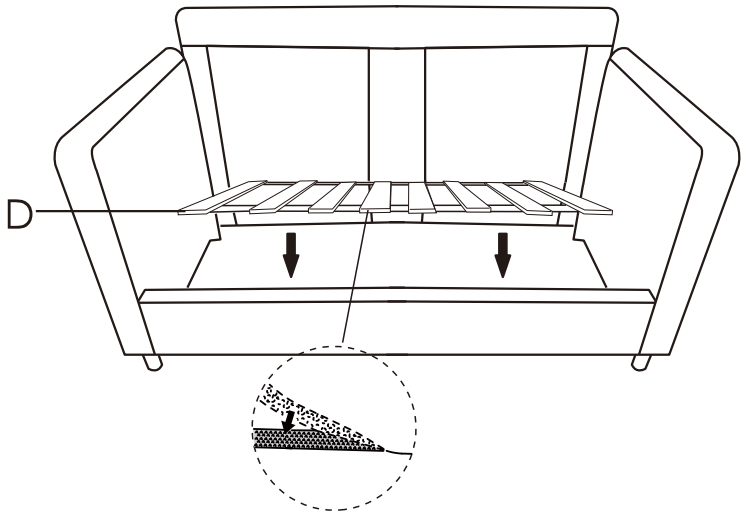

D x1

Assembly Instruction

STEP9

Please check if the components is well assembled.

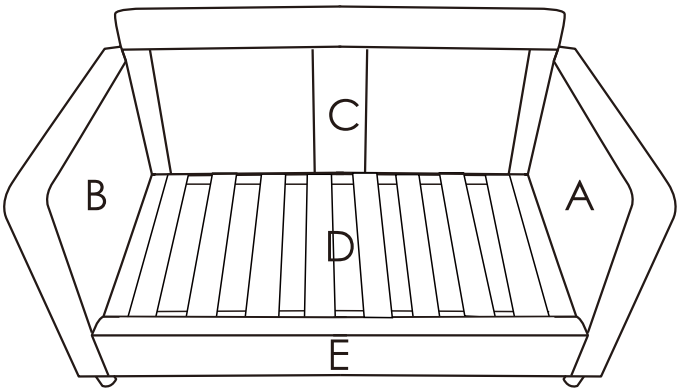

STEP10

Put the back cushion(J), seat cushion(I) and body pillow(H) on the frame of sofa, the assembly is done.

