Assembly Instruction

Thank you for purchasing this quality product! Make sure all components and small hardware parts are included in the package before you start to assemble the product.

MODEL:1224-4PC-2PWR-U-SEC-CHS

Components List

E	H	I
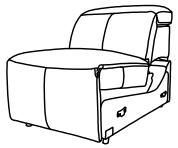	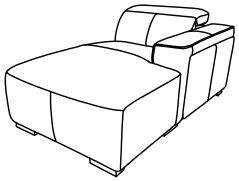	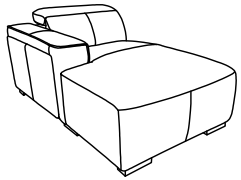
X2	X1	X1

Step 1 Assemble hooks

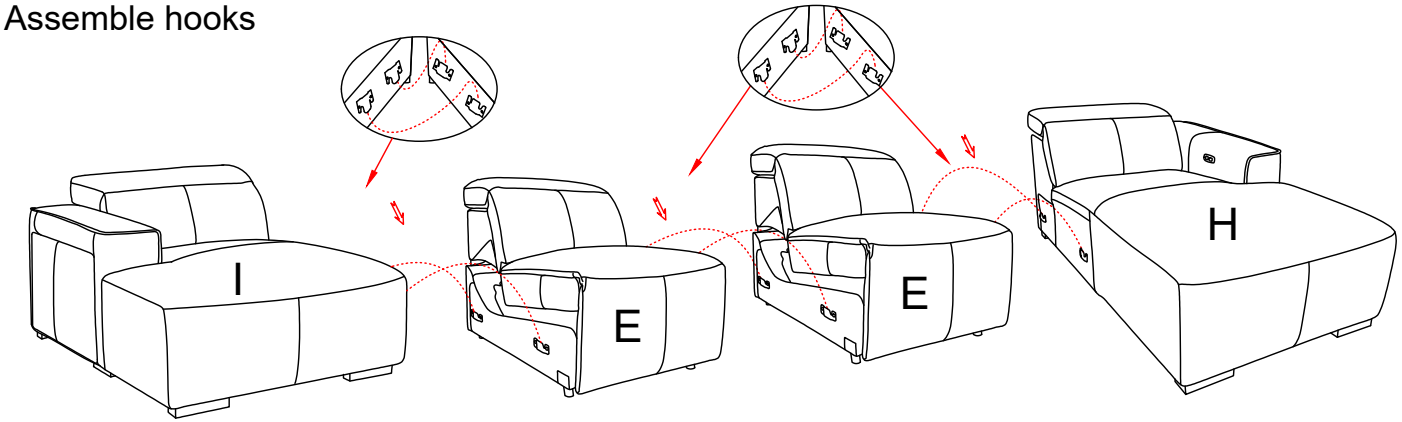

Step 2 Finished

