2 PCS SOFA CHAIRS

INSTRUCTION MANUAL

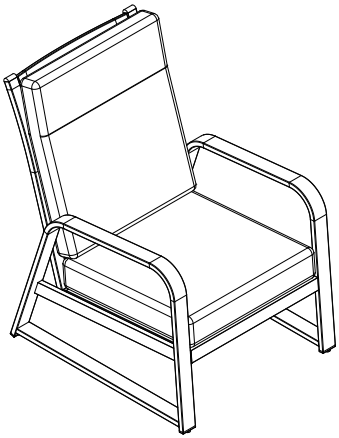

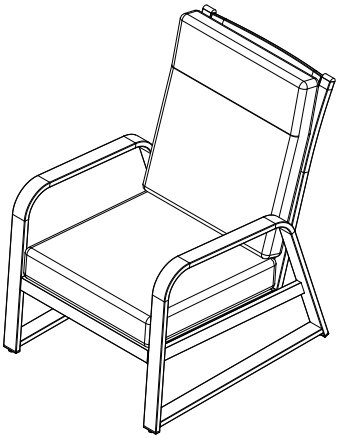

FOR YOUR SAFETY!

Read the instruction manual before assembling and using.

CONTACT FIRST!

If you have any questions that are not covered in this manual or need help, please contact your local dealer or our customer service.

CUSTOMER SERVICE

800-257-7108

Mon-Fri, 9:00 AM - 5:00 PM EST

service@patiotimeusa.com

SAVOR QUALITY OUTDOOR MOMENTS

www.patiotimeusa.com

GENERAL INFORMATION

In case of any issue, call your local dealer first! **DO NOT RETURN** the furniture. This product has been made to high-quality standards. If you have questions regarding assembly, operation, or need parts that are not addressed in this manual, consult your dealer or call our direct customer service hotline.

Patio Time® appreciates your trust and your purchase in supporting your home decorating plan. Our customer service department is available from Monday to Friday, 9:00 AM - 5:00 PM EST, if necessary, to replace damaged or missing parts. To help expedite our service, please have these assembly instructions readily available along with your original order receipt. For warranty terms and conditions, please read through the Warranty Card included in the packaging box.

PRE ASSEMBLY TIPS & ADVICE

After unpacking, please check if the parts show any damage. In addition, please check if all parts and hardware are in position before assembly. If any parts are damaged or missing, please DO NOT assemble the furniture and contact your local dealer for assistance. If you do not have the parts or hardware list, please contact your dealer to send them to you immediately.

Do not use the furniture unless it is COMPLETELY assembled and all parts are securely fastened and tightened.

We certainly understand that building ready-to-assemble furniture can be a challenging experience for some individuals. To help avoid confusion, we have provided some tips that may speed up the process.

- ✓ Assembling near the area of the intended location is highly recommended.
- ✓ Make sure you have enough space to move around during the assembly.
- ✓ Use cardboard, blankets, or a carpeted area while assembling furniture to prevent scratches.
- ✓ Make sure the furniture rests on a flat and level surface, with each leg evenly touching the floor.

Some parts may contain sharp edges. Wear protective gloves (not included) if necessary.

Turn clockwise to tighten, and tighten only when the step is complete or when instructed to do so.

After two weeks, check and tighten any loose hardware, and repeat the process every one to two months thereafter or as necessary.

Always have at least two people help with transporting and assembling the product to avoid potential injury and/or damage.

IT IS THE USER'S RESPONSIBILITY TO MAINTAIN THE FURNITURE. THE HARDWARE MAY LOOSEN OVER TIME AND CAUSE THE FURNITURE TO BECOME WOBBLY, IMPACTING ITS ABILITY TO SUPPORT THE INTENDED WEIGHT CAPACITY. THIS MAY LEAD TO COLLAPSE AND CAUSE SERIOUS INJURY.

⚠ FAILURE TO FOLLOW THE GUIDELINES BELOW MAY RESULT IN INJURY AND/OR PROPERTY DAMAGE.

CLEANING AND MAINTENANCE

For your furniture to last, proper assembly and maintenance are necessary. Please take the time to read and follow the instructions below. Use the furniture as described in this instruction manual to fully enjoy it. We also advise you to retain this manual for future reference.

To avoid damage to your furniture legs, frame, and/or the floor, please make sure to move the furniture by LIFTING it rather than pulling or pushing when transporting or adjusting its placement. Check the stability of bolts, nuts, and nut caps as a priority. Tighten them after one to two months of use, whenever necessary. Avoid improper use, and be careful not to scratch or damage the surface with sharp objects.

⚠ Patio Time® will not be liable for any damage caused by improper use.

Cushions

Our cushions do have zippers; however, **the zippers are for production use ONLY**, and we strongly recommend **NOT** removing the cover from the fill. The cushions are not waterproof, but they are water-repellent. This means light rain will bead off the cushion surface, but under heavy rain, the water will penetrate the pillow.

Although our cushions are water-repellent (not water-resistant) and UV-resistant, we recommend bringing them indoors when not in use to preserve their lifespan and maintain their appearance. Clean spills or stains immediately for better maintenance. Sweep dirt or grime regularly to prevent it from penetrating the cushions.

1. Choose a sunny day in your yard.
2. Use a sponge, clean towel, or soft scrub brush with a warm soapy water solution to clean the cushion.
3. Gently scrub and wipe until the cushion is clean.
4. Rinse the area with a clean damp sponge to remove all soap residue and avoid water spots.
5. Hang the cushion outside to air dry until it is completely dry.

⚠ WARNINGS ⚠

- DO NOT REMOVE COVERS FROM THE FILL.
- Do not bleach to clean.
- Do not put cushions in the dryer.
- Do not submerge cushions in water.
- Avoid direct contact with the sun for extended periods.
- Avoid using abrasive cleaners or hard-bristle brushes.

Aluminum

Our aluminum patio furniture is made from high-quality aluminum for guaranteed strength and durability. You don't have to worry about sacrificing style for durability, as we offer a wide variety of collections. However, care and maintenance are important to keep your furniture in top condition. Before cleaning your aluminum surfaces, make sure the furniture is not hot from sun exposure.

1. Remove the cushions from the furniture.
2. Prepare a solution of water and mild detergent.
3. Spray the solution on the dirty area.
4. Use a soft, dry cloth or a sponge to clean the surface.
5. Rinse with clean water and allow the furniture to air-dry completely before replacing the cushions.
6. Tighten bolts, nuts, and nut caps after a period of use.

WARNINGS

- Never use hard-bristle brushes, abrasive cleaners, or bleach on the frames.
- Avoid pulling or pushing the furniture to prevent damage to the floor, legs, and frame.
- Use covers to protect the furniture or store it indoors when not in use.

Storage

1. Clean your appliance before storing it.
2. Store it in a cool, dry place, either outdoors or indoors, but make sure to disconnect and remove the LP cylinder from the appliance.
3. A cover is highly recommended to protect your appliance (purchase separately from any online shop).
4. Perform a Leak Test before using the appliance after it has been stored.

ASSEMBLY INSTRUCTIONS

Parts List

Part No.	A1	B1	C1	D1	E1	F1
Images						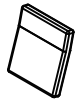
Qty.	1	1	1	1	1	1

Hardware List

Key	H0	J35	J55	L15
Images		M6*35	M6*55	M6
Qty.		4	4	8

Exploded View

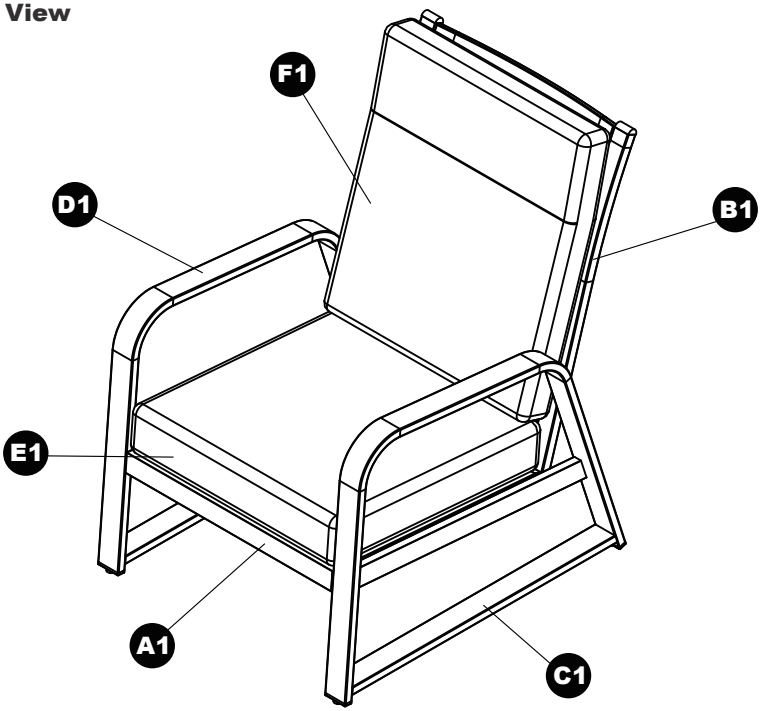

1

CAUTION

Note: Do not tighten screws before final assembly.

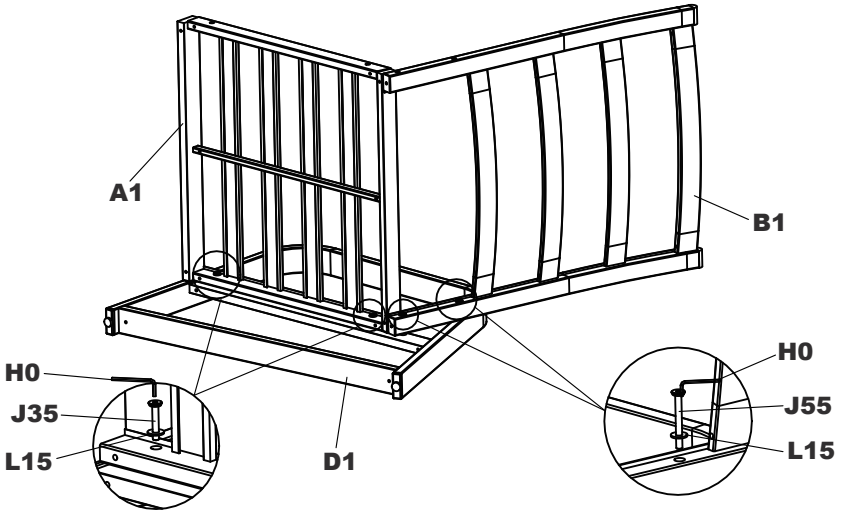

2

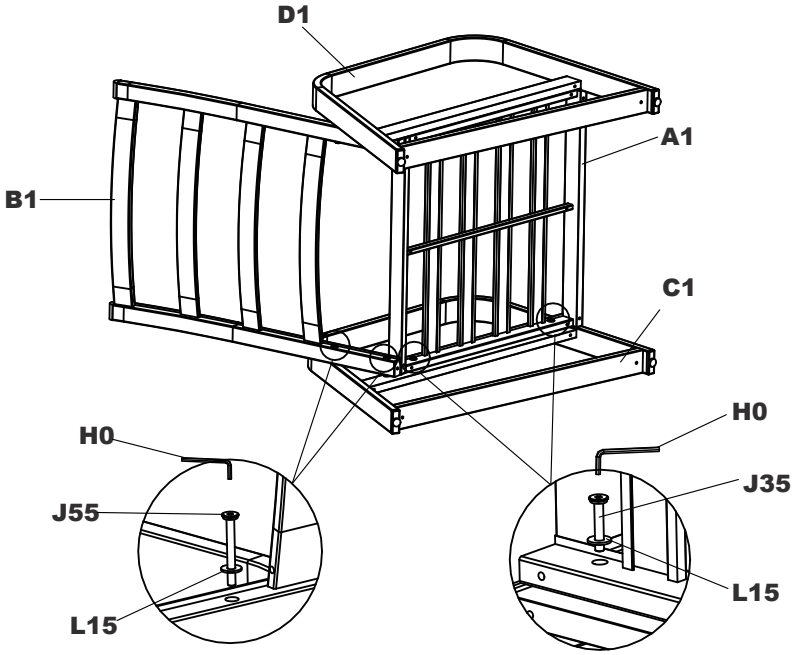

3

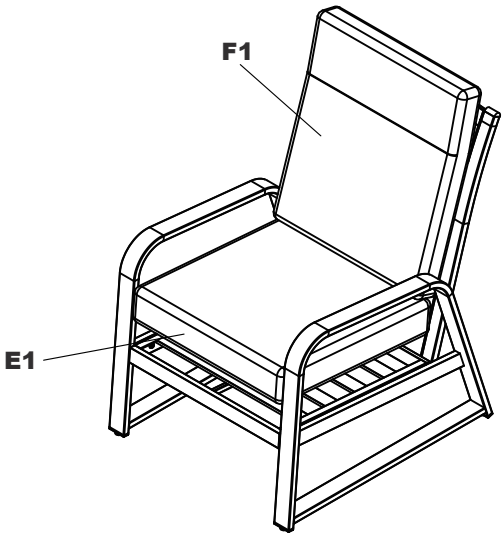

4

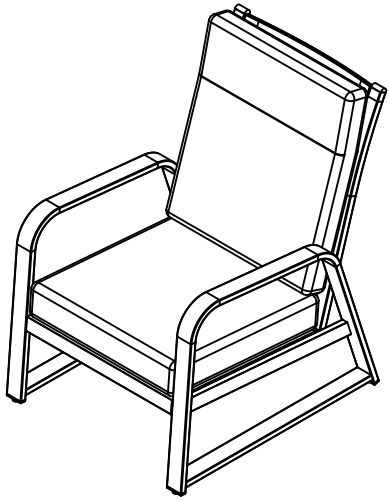

ASSEMBLY COMPLETED

- ✓ Please ensure the furniture is placed on a flat, level surface.
- ✓ If the product wobbles or feels loose, double-check that all bolts and nuts are properly tightened and secured.

Patic time

Patio time®

3-SEATER SOFA AND COFFEE TABLE

INSTRUCTION MANUAL

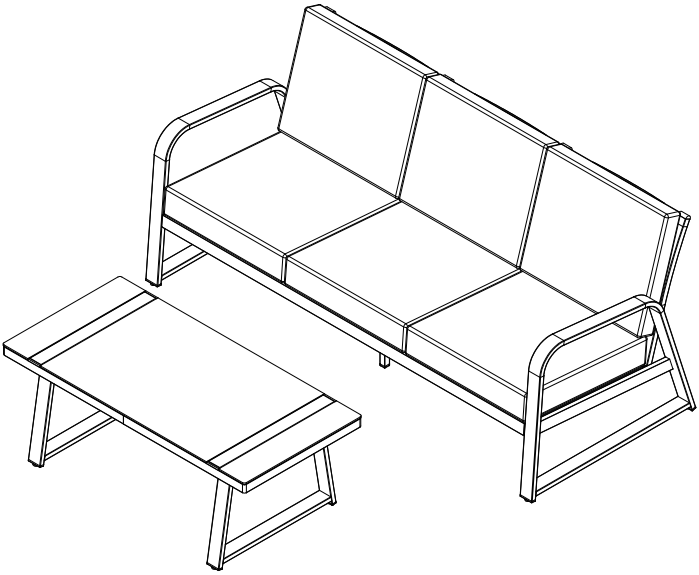

FOR YOUR SAFETY!

Read the instruction manual before assembling and using.

CONTACT FIRST!

If you have any questions that are not covered in this manual or need help, please contact your local dealer or our customer service.

CUSTOMER SERVICE

800-257-7108

Mon-Fri, 9:00 AM - 5:00 PM EST

service@patiotimeusa.com

SAVOR QUALITY OUTDOOR MOMENTS

www.patiotimeusa.com

GENERAL INFORMATION

In case of any issue, call your local dealer first! **DO NOT RETURN** the furniture. This product has been made to high-quality standards. If you have questions regarding assembly, operation, or need parts that are not addressed in this manual, consult your dealer or call our direct customer service hotline.

Patio Time® appreciates your trust and your purchase in supporting your home decorating plan. Our customer service department is available from Monday to Friday, 9:00 AM - 5:00 PM EST, if necessary, to replace damaged or missing parts. To help expedite our service, please have these assembly instructions readily available along with your original order receipt. For warranty terms and conditions, please read through the Warranty Card included in the packaging box.

PRE ASSEMBLY TIPS & ADVICE

After unpacking, please check if the parts show any damage. In addition, please check if all parts and hardware are in position before assembly. If any parts are damaged or missing, please DO NOT assemble the furniture and contact your local dealer for assistance. If you do not have the parts or hardware list, please contact your dealer to send them to you immediately.

Do not use the furniture unless it is COMPLETELY assembled and all parts are securely fastened and tightened.

We certainly understand that building ready-to-assemble furniture can be a challenging experience for some individuals. To help avoid confusion, we have provided some tips that may speed up the process.

- ✓ Assembling near the area of the intended location is highly recommended.
- ✓ Make sure you have enough space to move around during the assembly.
- ✓ Use cardboard, blankets, or a carpeted area while assembling furniture to prevent scratches.
- ✓ Make sure the furniture rests on a flat and level surface, with each leg evenly touching the floor.

Some parts may contain sharp edges. Wear protective gloves (not included) if necessary.

Turn clockwise to tighten, and tighten only when the step is complete or when instructed to do so.

After two weeks, check and tighten any loose hardware, and repeat the process every one to two months thereafter or as necessary.

Always have at least two people help with transporting and assembling the product to avoid potential injury and/or damage.

IT IS THE USER'S RESPONSIBILITY TO MAINTAIN THE FURNITURE. THE HARDWARE MAY LOOSEN OVER TIME AND CAUSE THE FURNITURE TO BECOME WOBBLY, IMPACTING ITS ABILITY TO SUPPORT THE INTENDED WEIGHT CAPACITY. THIS MAY LEAD TO COLLAPSE AND CAUSE SERIOUS INJURY.

⚠ FAILURE TO FOLLOW THE GUIDELINES BELOW MAY RESULT IN INJURY AND/OR PROPERTY DAMAGE.

CLEANING AND MAINTENANCE

For your furniture to last, proper assembly and maintenance are necessary. Please take the time to read and follow the instructions below. Use the furniture as described in this instruction manual to fully enjoy it. We also advise you to retain this manual for future reference.

To avoid damage to your furniture legs, frame, and/or the floor, please make sure to move the furniture by LIFTING it rather than pulling or pushing when transporting or adjusting its placement. Check the stability of bolts, nuts, and nut caps as a priority. Tighten them after one to two months of use, whenever necessary. Avoid improper use, and be careful not to scratch or damage the surface with sharp objects.

⚠ Patio Time® will not be liable for any damage caused by improper use.

Cushions

Our cushions do have zippers; however, **the zippers are for production use ONLY**, and we strongly recommend **NOT** removing the cover from the fill. The cushions are not waterproof, but they are water-repellent. This means light rain will bead off the cushion surface, but under heavy rain, the water will penetrate the pillow.

Although our cushions are water-repellent (not water-resistant) and UV-resistant, we recommend bringing them indoors when not in use to preserve their lifespan and maintain their appearance. Clean spills or stains immediately for better maintenance. Sweep dirt or grime regularly to prevent it from penetrating the cushions.

1. Choose a sunny day in your yard.
2. Use a sponge, clean towel, or soft scrub brush with a warm soapy water solution to clean the cushion.
3. Gently scrub and wipe until the cushion is clean.
4. Rinse the area with a clean damp sponge to remove all soap residue and avoid water spots.
5. Hang the cushion outside to air dry until it is completely dry.

⚠ WARNINGS ⚠

- DO NOT REMOVE COVERS FROM THE FILL.
- Do not bleach to clean.
- Do not put cushions in the dryer.
- Do not submerge cushions in water.
- Avoid direct contact with the sun for extended periods.
- Avoid using abrasive cleaners or hard-bristle brushes.

Aluminum

Our aluminum patio furniture is made from high-quality aluminum for guaranteed strength and durability. You don't have to worry about sacrificing style for durability, as we offer a wide variety of collections. However, care and maintenance are important to keep your furniture in top condition. Before cleaning your aluminum surfaces, make sure the furniture is not hot from sun exposure.

1. Remove the cushions from the furniture.
2. Prepare a solution of water and mild detergent.
3. Spray the solution on the dirty area.
4. Use a soft, dry cloth or a sponge to clean the surface.
5. Rinse with clean water and allow the furniture to air-dry completely before replacing the cushions.
6. Tighten bolts, nuts, and nut caps after a period of use.

WARNINGS

- Never use hard-bristle brushes, abrasive cleaners, or bleach on the frames.
- Avoid pulling or pushing the furniture to prevent damage to the floor, legs, and frame.
- Use covers to protect the furniture or store it indoors when not in use.

Storage

1. Clean your appliance before storing it.
2. Store it in a cool, dry place, either outdoors or indoors, but make sure to disconnect and remove the LP cylinder from the appliance.
3. A cover is highly recommended to protect your appliance (purchase separately from any online shop).
4. Perform a Leak Test before using the appliance after it has been stored.

ASSEMBLY INSTRUCTIONS

Parts List

Part No.	A2	B2	C2	D2	E2	F2	G2
Images							
Qty.	1	1	1	1	3	3	1

Hardware List

Key	H0	J20	J35	J55	L15
Images		M6*20	M6*35	M6*55	M6
Qty.		4	6	4	14

Exploded View

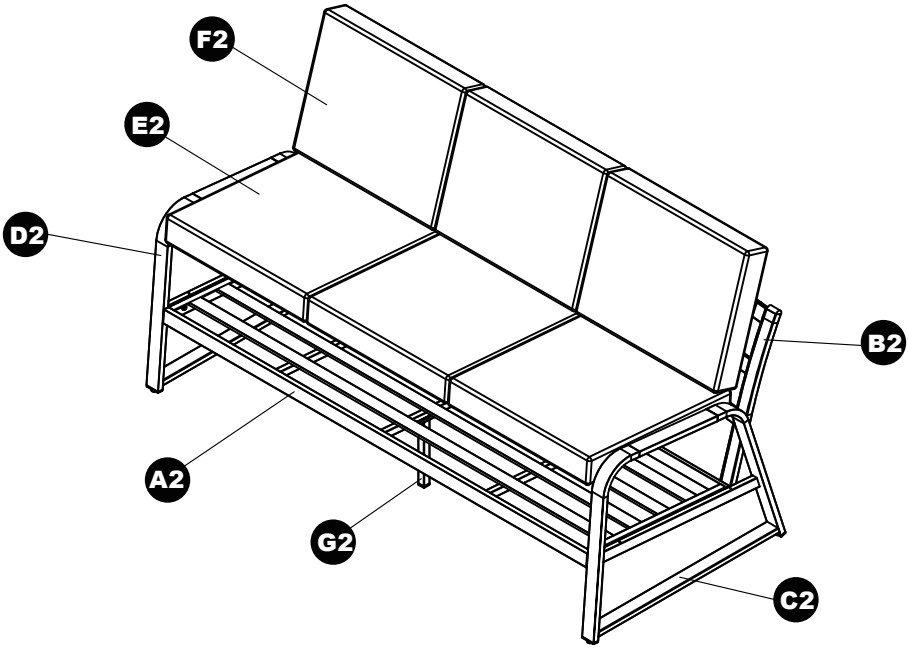

1

CAUTION

Note: Do not tighten screws before final assembly.

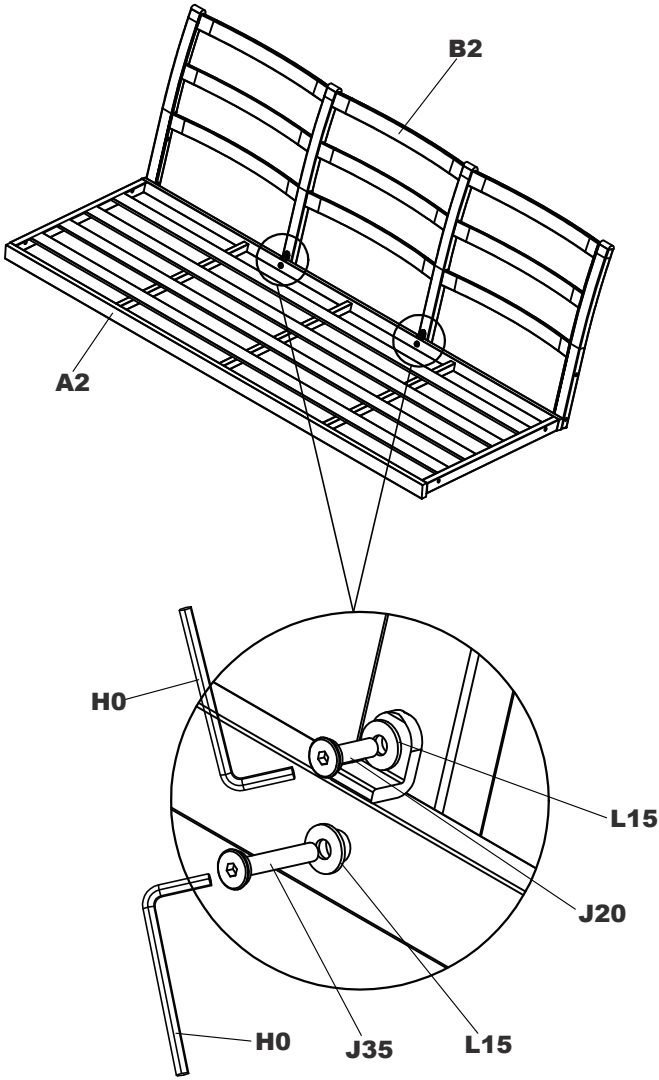

2

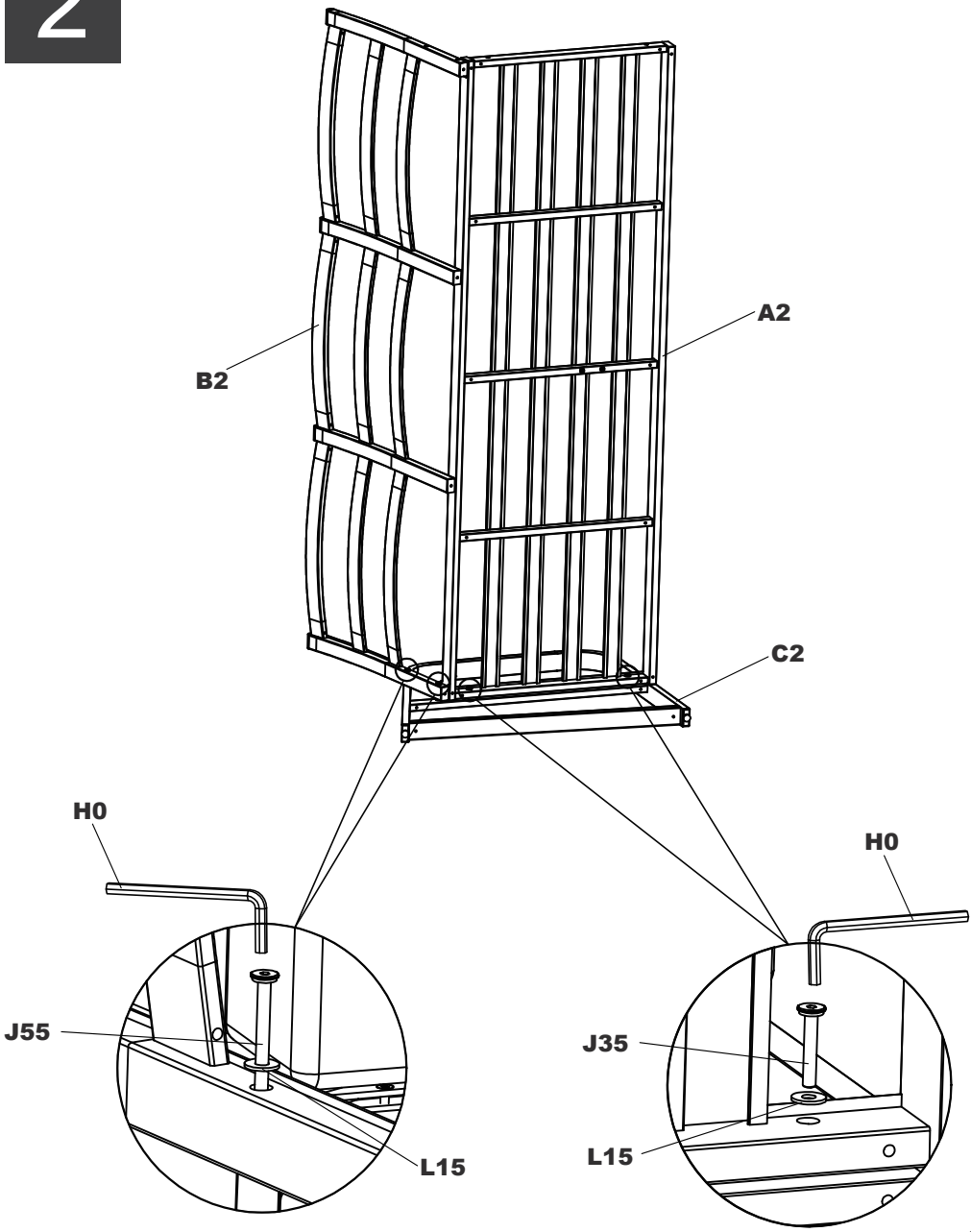

3

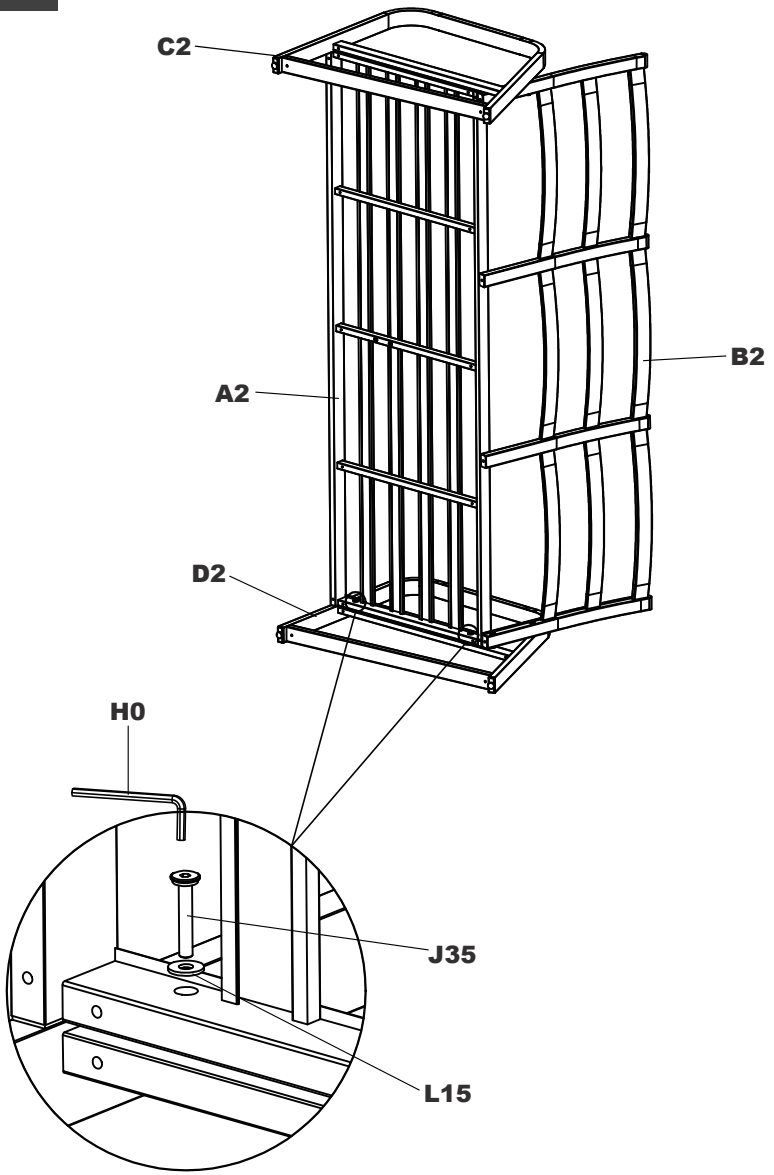

4

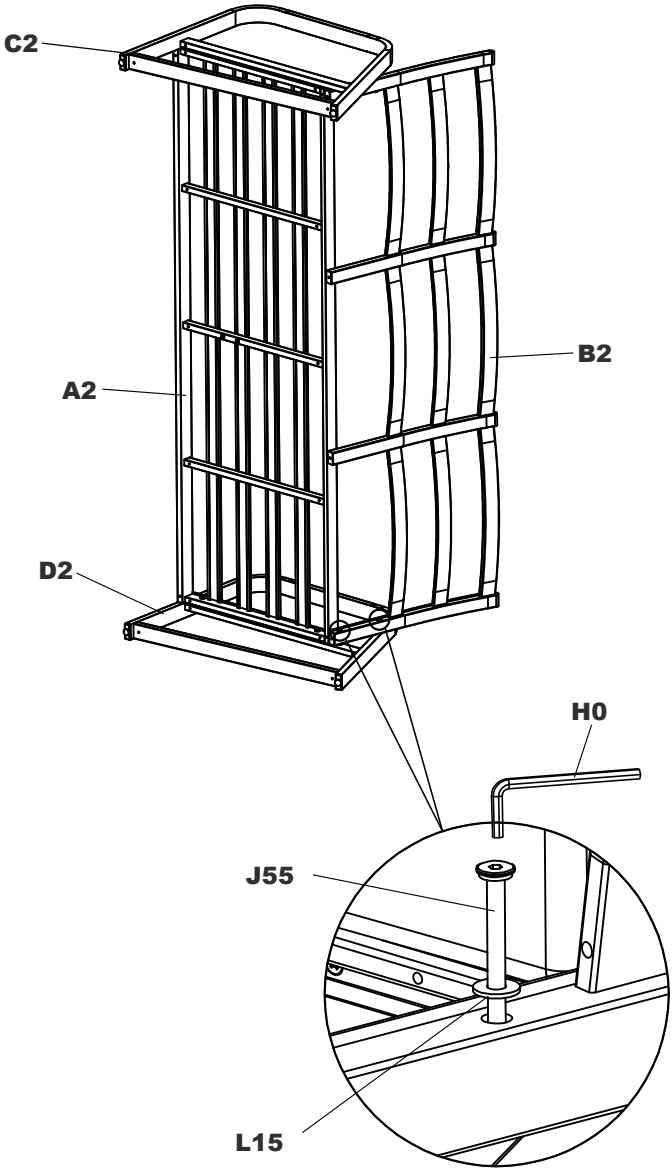

5

CAUTION

Note: Distinguish front and back.

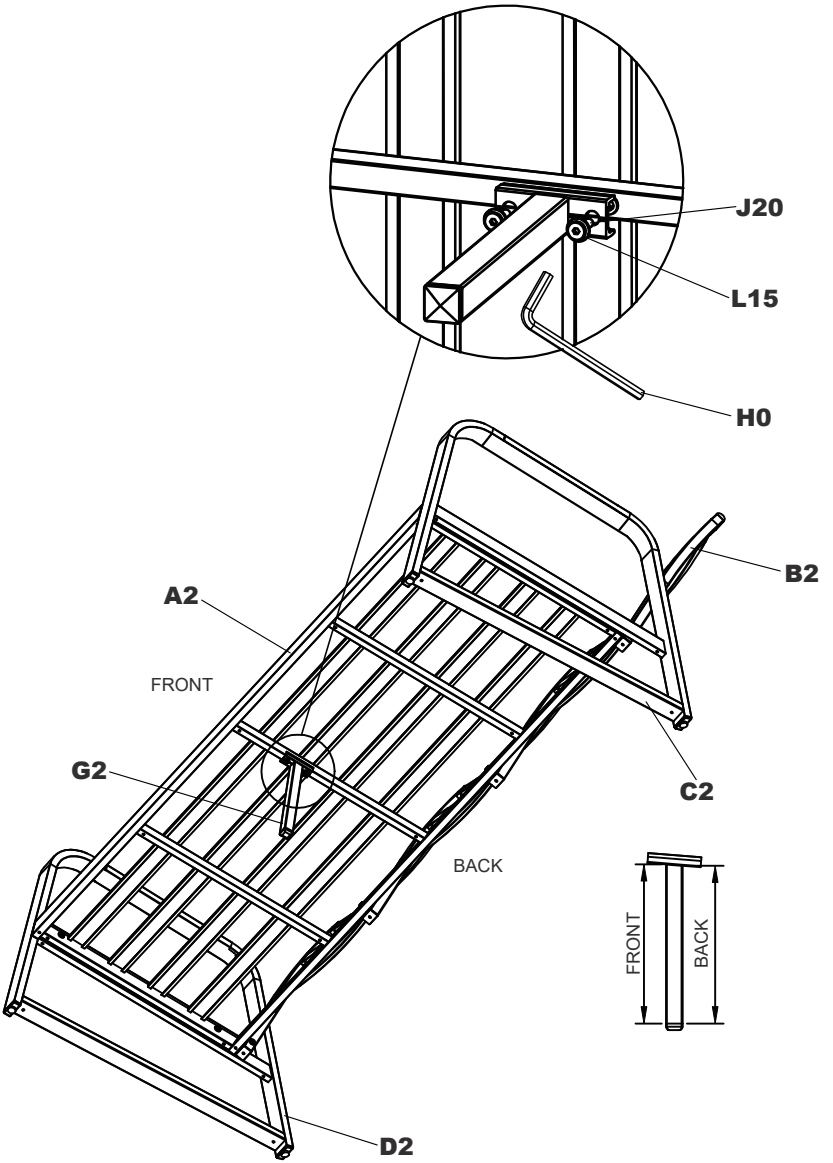

6

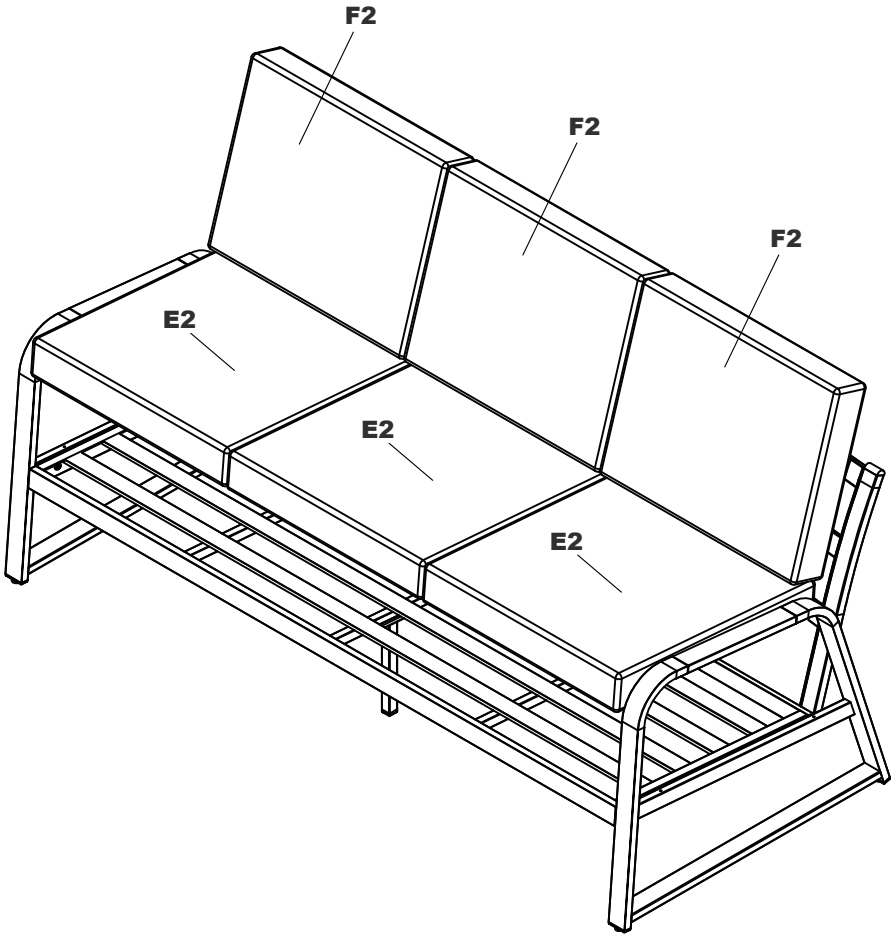

7

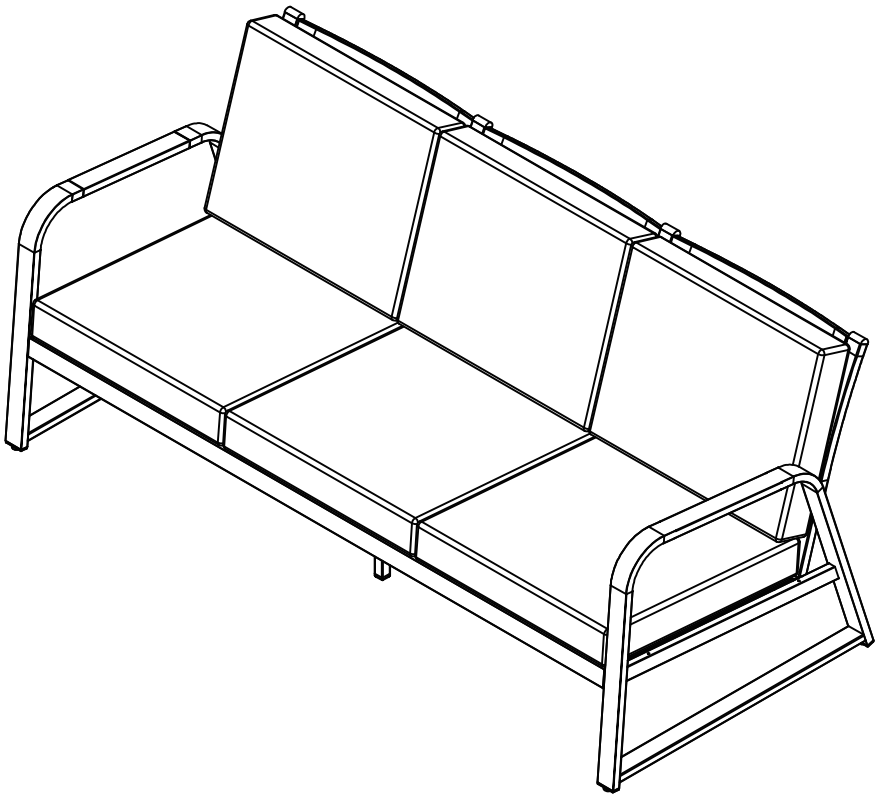

ASSEMBLY COMPLETED

- ✓ Please ensure the furniture is placed on a flat, level surface.
- ✓ If the product wobbles or feels loose, double-check that all bolts and nuts are properly tightened and secured.

ASSEMBLY INSTRUCTIONS

Parts List

Part No.	A3	B3
Images		
Qty.	1	2

Hardware List

Key	H0	J20	L15
Images		M6*20	M6
Qty.		8	8

Exploded View

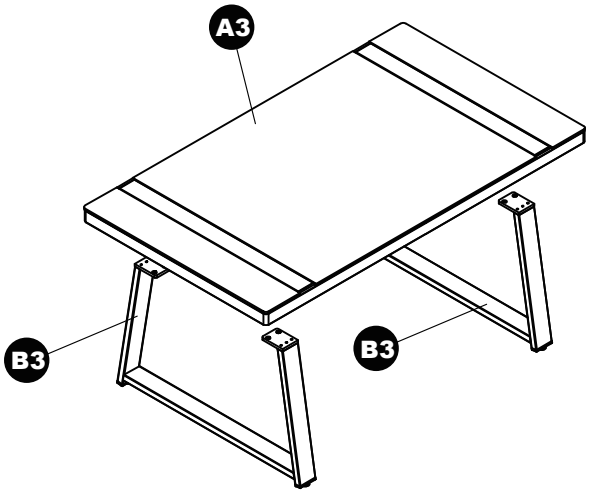

1

CAUTION

Note: Do not tighten screws before final assembly.

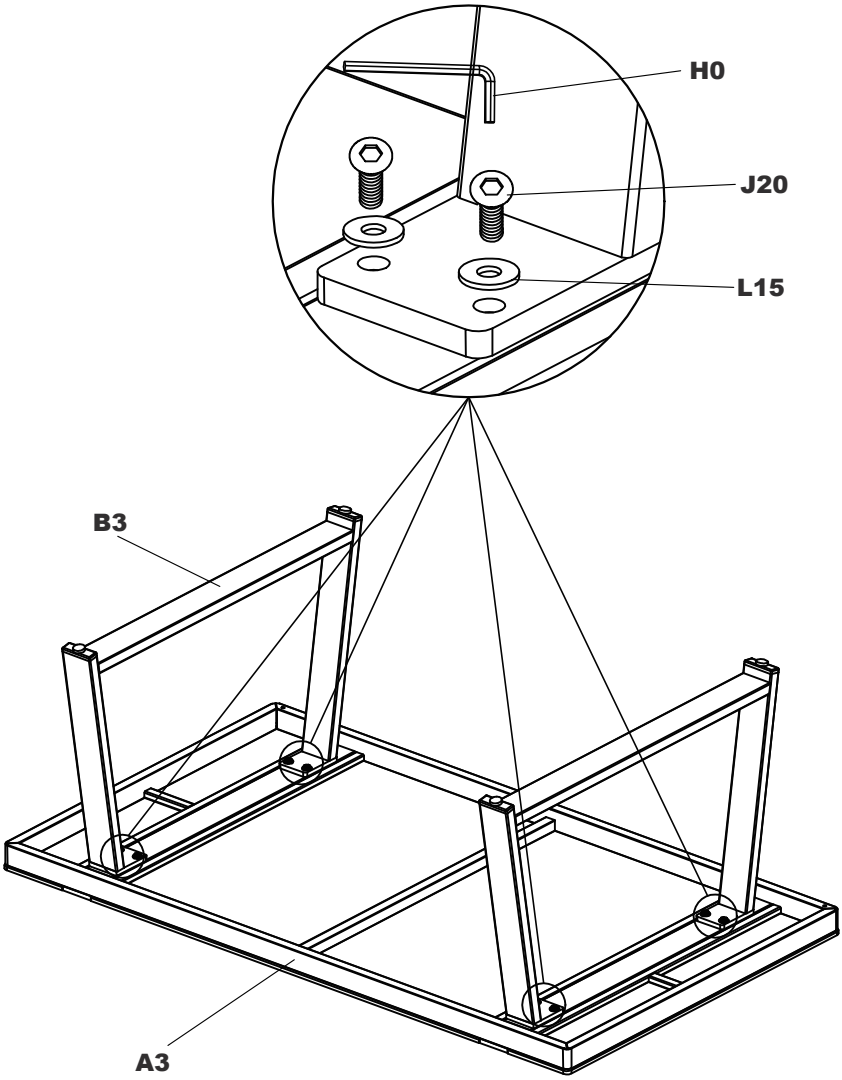

2

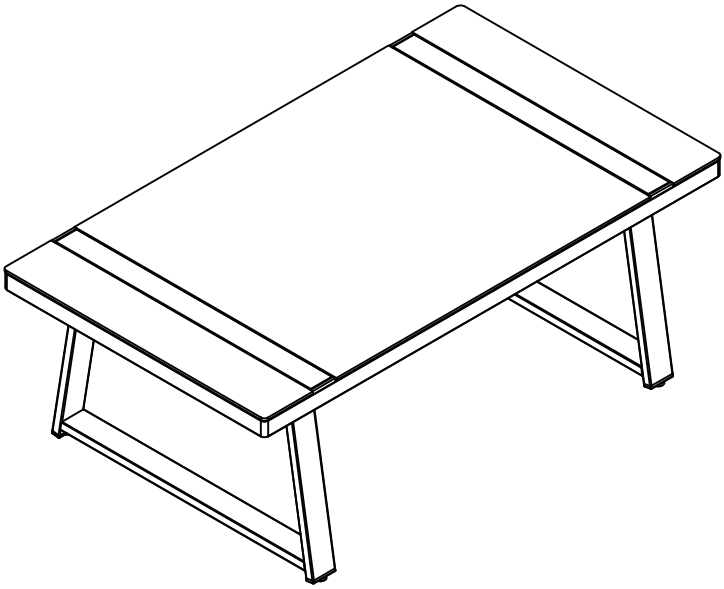

ASSEMBLY COMPLETED

- ✓ Please ensure the furniture is placed on a flat, level surface.
- ✓ If the product wobbles or feels loose, double-check that all bolts and nuts are properly tightened and secured.

Patic time