MEDICINE CABINET

Instruction Manual

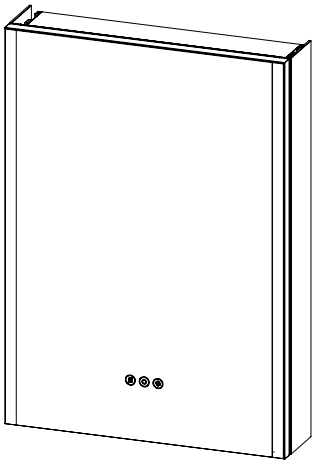

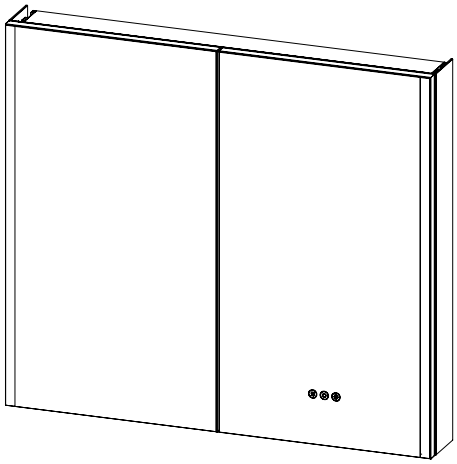

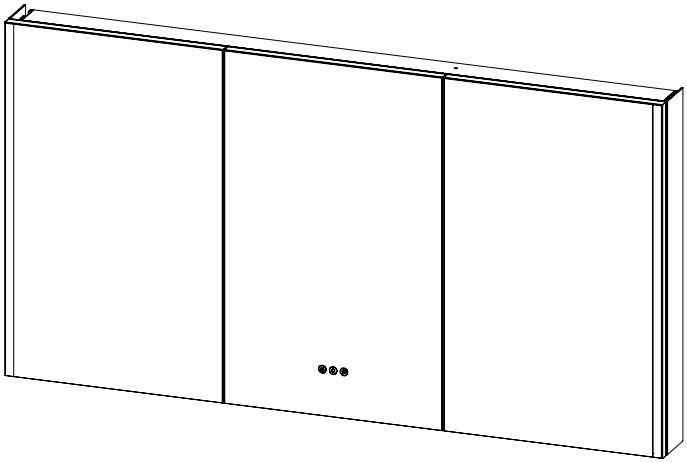

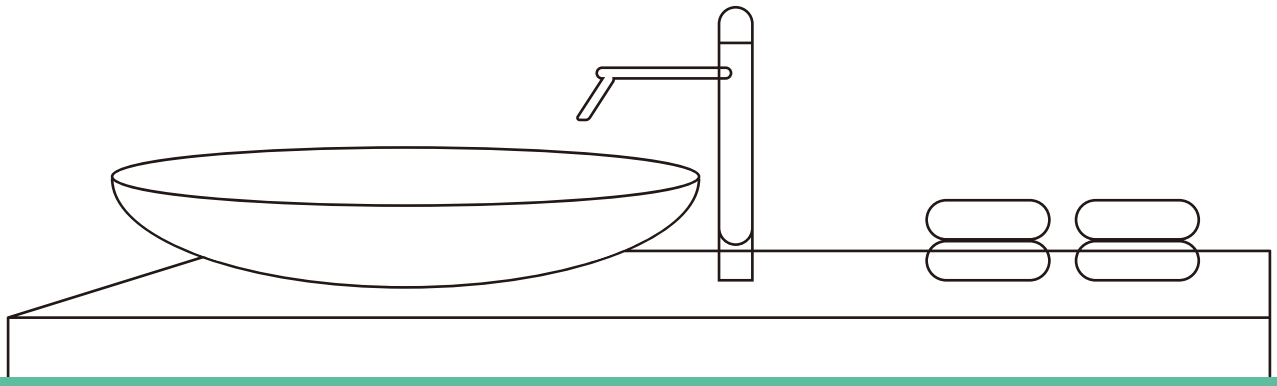

Rail

BEFORE YOU BEGIN

- Please read these instructions carefully before installation. Familiarize yourself with the necessary tools, materials, and procedures. Retain this manual for future reference.
- All information in these instructions is based upon latest product information available at the time of publication. We reserves the right to make changes in product characteristics, packaging, or availability at any time without notice.

PARAMETER	SPECIFICATION
Input	100-120VAC,50/60Hz
Output	24VDC
Power	Refer to product label
CCT	2700K/4000K/6500K
CRI	≥ 80 Ra
Working Temperature	-10°C to 45 °C
Life Span	≥ 25,000 Hours
Anti-fog	Yes
IP Rating	IP44
Wiring Method	Hardwired
Switch	Touch Sensor Switch

SPECIFICATIONS

Dimension (Inch)	Dimension (Millimeter)	Types of Medicine Cabinet
16 x 24 x 5 1/16	406 x 610 x 129	Single-door
20 x 28 x 5 1/16	508 x 711 x 129	Single-door
24 x 30 x 5 1/16	610 x 762 x 129	Single-door
24 x 36 x 5 1/16	610 x 914 x 129	Single-door
36 x 32 x 5 1/16	914 x 813 x 129	Double-door
48 x 32 x 5 1/16	1219 x 813 x 129	Double-door
54 x 32 x 5 1/16	1372 x 813 x 129	Triple-door
60 x 32 x 5 1/16	1524 x 813 x 129	Triple-door

PACKING LIST

No. \ Size		16"x24" / 20"x28" 24"x30" / 24"x36"	36" x 32" / 48" x 32"	54" x 32"	60" x 32"
(1)	Short Screw M4x6	3 Pcs	3 Pcs	3 Pcs	3 Pcs
(2)	Door Bumper	3 Pcs	5 Pcs	7 Pcs	7 Pcs
(3)	Long Screw Ø5x55	6 Pcs	7 Pcs	9 Pcs	10 Pcs
(4)	Anchor Ø8x50	6 Pcs	7 Pcs	9 Pcs	10 Pcs
(5)	Hinge Cover	2 Pcs	4 Pcs	6 Pcs	6 Pcs
(6)	Bottom Bracket	2 Pcs	2 Pcs	2 Pcs	2 Pcs
(7)	Top Bracket	1 Pcs	1 Pcs	1 Pcs	1 Pcs
(8)	Wiring Cap	4 Pcs	4 Pcs	4 Pcs	4 Pcs
(9)	Tempered Glass Shelf	2 Pcs	2 Pcs	Long 2 Pcs Short 2 Pcs	Long 2 Pcs Short 2 Pcs
(10)	Side Mirror	2 Pcs	2 Pcs	2 Pcs	2 Pcs
(11)	Short Screw M4x10	5 Pcs	5 Pcs	5 Pcs	5 Pcs

● Carefully review all parts and read the installation instructions before you start. if parts are missing, please contact us.

IMPORTANT SAFETY INSTRUCTIONS

NOTE

Please read instructions thoroughly before installation and keep them for future reference.
Do not discard any packaging materials or instructions until installation is complete and everything has been verified.
To prevent damage, do not place the cabinet directly on tile or concrete surfaces prior to installation. Use a protective layer to avoid chipping the corners.
Be sure to check for any hidden wiring or pipes before drilling guide holes to avoid potential damage.

⚠ DANGER

- To reduce the risk of electric shock:
  Always unplug this product from the electrical outlet before cleaning.

⚠ WARNING

-To reduce the risk of burns, fire, electric shock, or injury to persons:unplug from outlet before putting on or taking off parts.
-Close supervision is necessary when this product is used by, or near children, invalids, or disabled persons.
-Use this product only for its intended use as described in these instructions. Do not use attachments not recommended by the manufacturer.
-Never operate this product if it has a damaged cord or plug, if it is not working properly, if it has been dropped or damaged, or dropped into water. Return the product to a service center for examination and repair.
-Keep the cord away from heated surfaces.
-Never operate the product with the air openings blocked. Keep the air openings free of lint, hair, and the like.
-Never drop or insert any object into any opening.
-Do not use outdoors.
-Do not operate where aerosol (spray) products are being used or where oxygen is being administered.
-To disconnect, turn all controls to the off position, then remove plug from outlet.
-Mount product at the correct height.
-For Household / Residential Use Only.
-Assemble on the branch circuit provided with Class A GFCI protection.
-Risk of Electric Shock
- Connect this product to a properly grounded outlet only. See Grounding Instructions.

ELECTRIC CONNECTIONS

GROUNDING INSTRUCTION

⚠ CAUTION

This product must be connected to a grounded metal, permanent wiring system, or an equipment-grounding conductor must be run with the circuit conductors and connected to the equipment-grounding terminal or lead on the product.

Intertek
5030280

⚠ WARNING

An Electrical option Medicine Cabinet must be wired to a 20 Amp GFCI(Ground Fault Circuit Interrupter) protected circuit when used in bathrooms and all other locations required by the National Electric Code.

IMPORTANT

-To prevent damage, do not place the cabinet directly on tile or concrete surfaces prior to installation. Use a protective layer to avoid chipping the corners.
-Be sure to check for any hidden wiring or pipes before drilling guide holes to avoid potential damage.
-A certified electrician must perform all work. The mirror must be connected to GFCI.

CARE AND CLEANING

To clean the cabinet, use a soft, dry cloth. For more thorough cleaning, use a cloth dampened with warm, soapy water. Avoid using abrasive pads, harsh chemicals, alcohol, or solvents, as these may damage the surface finish.
For the mirror, wipe with a soft, damp cloth. If using a glass cleaner, always apply it to the cloth — never spray directly onto the mirror.

FCC Compliance Statement

This device complies with part 15 of the FCC Rules. Operation is subject to the following two conditions: (1) This device may not cause harmful interference, and (2) this device must accept any interference received, including interference that may cause undesired operation.

Note:

This equipment has been tested and found to comply with the limits for a Class B digital device, pursuant to part 15 of the FCC Rules. These limits are designed to provide reasonable protection against harmful interference in a residential installation. This equipment generates, uses and can radiate radio frequency energy and, if not installed and used in accordance with the instructions, may cause harmful interference to radio communications. However, there is no guarantee that interference will not occur in a particular installation. If this equipment does cause harmful interference to radio or television reception, which can be determined by turning the equipment off and on, the user is encouraged to try to correct the interference by one or more of the following measures:

- Reorient or relocate the receiving antenna.
- Increase the separation between the equipment and receiver.
- Connect the equipment into an outlet on a circuit different from that to which the receiver is connected.
- Consult the dealer or an experienced radio/TV technician for help.

This symbol indicates that electrical and electronic equipment (WEEE) should not be mixed with general household waste.
For recovery and recycling, please take this product to a designated collection point where it will be accepted free of charge. Many retailers offer take-back services. Disposing of this product correctly will help save valuable resources and prevent any potential negative effects on human health and the environment.

INSTALLATION

Installation Tools (Tools Not Included)

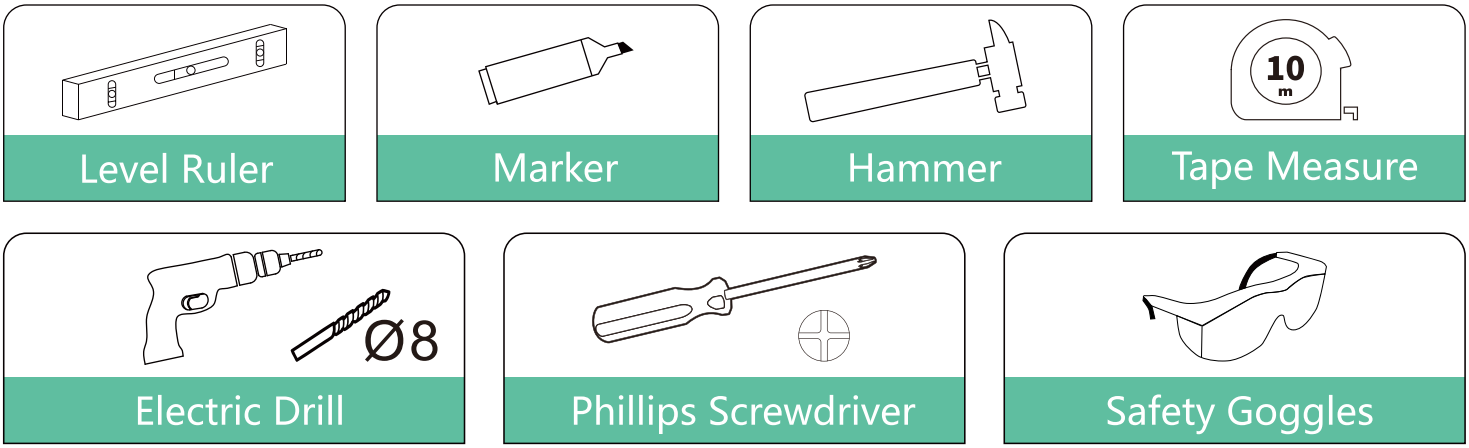

SURFACE MOUNT

Step 1

Refer to hole spacing diagram as below or mark hole position by top bracket(7). then drill holes in the wall by an electric drill.

Single-door

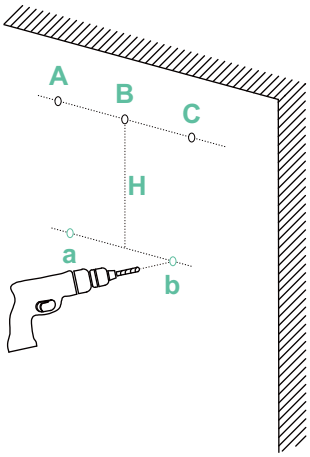

Double-door

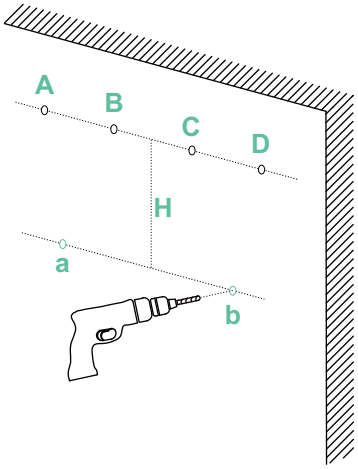

Triple-door

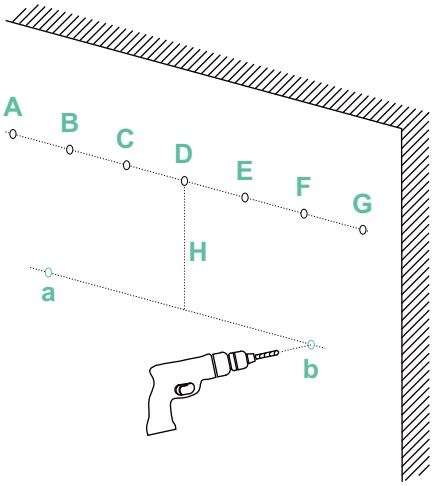

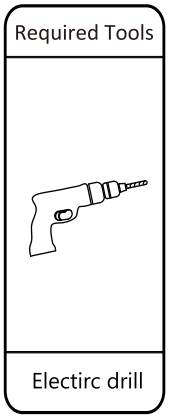

Distance \ Product size	16"x24"	20"x28"	24"x30"	24"x36"	36"x32"	48"x32"	54"x32"	60"x32"
A→B	4"	8"	8"	8"	8"	8"	8"	8"
B→C	4"	8"	8"	8"	8"	8"	8"	8"
C→D					8"	8"	8"	8"
D→E						8"	8"	8"
E→F							8"	8"
F→G								8"
Interval H	22 3/4"	26 3/4"	28 3/4"	34 3/4"	30 3/4"	30 3/4"	30 3/4"	30 3/4"
a→b	8"	16"	16"	16"	16"	32"	32"	32"

SURFACE MOUNT

Step 2

Place anchor(4) into the drilled holes and fix the top bracket(7) by long screw (3).

(3)		Long Screw Ø5x55
(4)		Anchor Ø8x50
(7)		Top Bracket

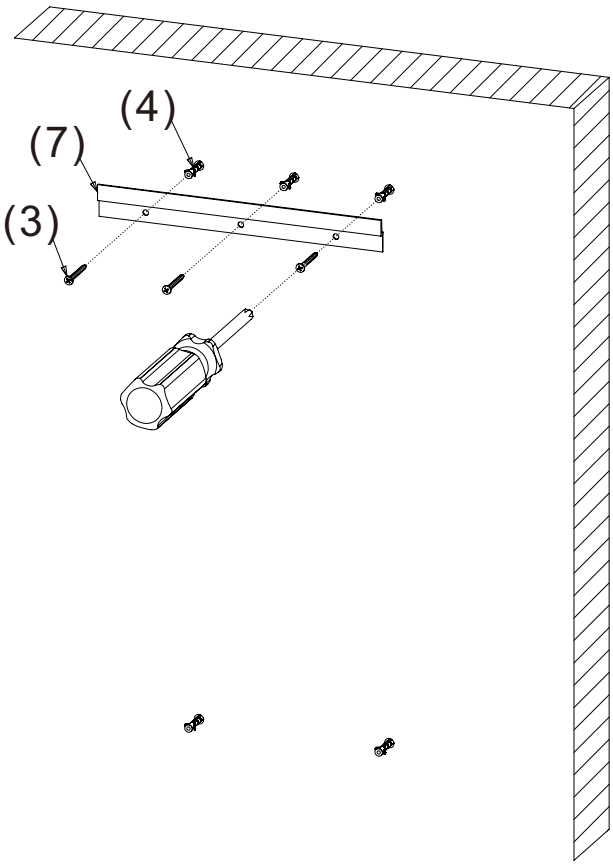

Step 3

Make sure power is turned off at the breaker before wiring. All electrical connections must comply with local codes and the National Electrical Code (NEC, NFPA 70).

Connect the cabinet wiring to your household power supply using the included wire connectors. Make sure all connections are properly secured and tucked inside the wall before mounting the cabinet.

(8)		Wiring Cap

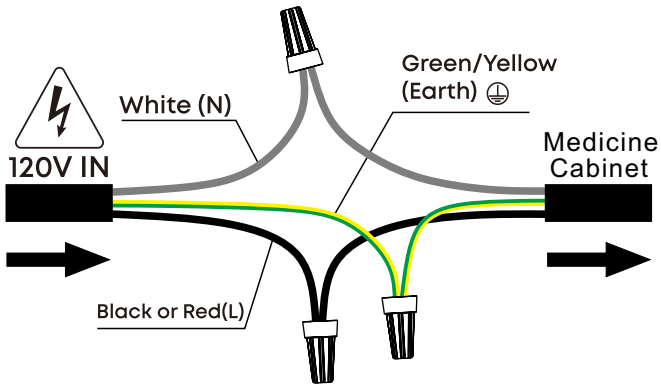

Refer to the diagram below on the left for the wiring method

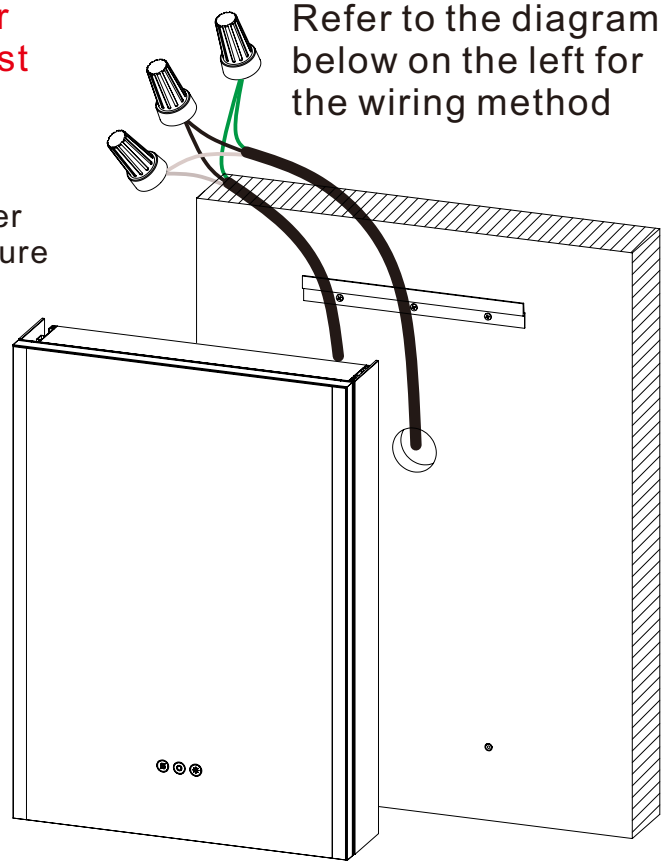

Step 4

①Lift the cabinet above the top bracket(7). Press it firmly against the wall, then lower it into place on the bracket.
②Secure the bottom bracket(6) to the cabinet using the short screw(1), Do not overtighten.
③Install the bottom bracket(6) onto the wall with the long screw(3) , then fully tighten the short screw(1) to secure the cabinet in place.

(1)		Short Screw M4x6
(3)		Long Screw Ø5x55
(6)		Bottom Bracket

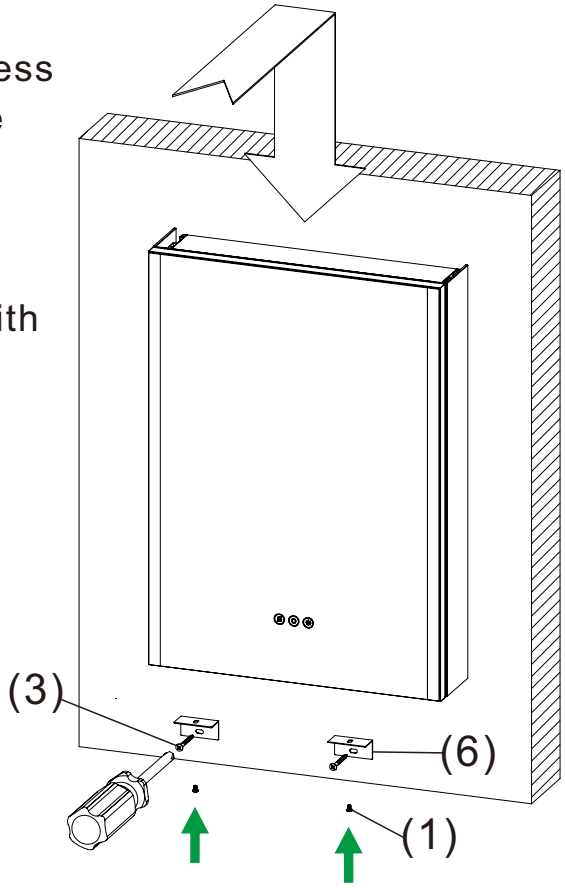

Step 5

Fix the side mirror (10) to the cabinet with short screw (11)by Phillips screwdriver.

(10)		Side Mirror
(11)		Short Screw M4x10

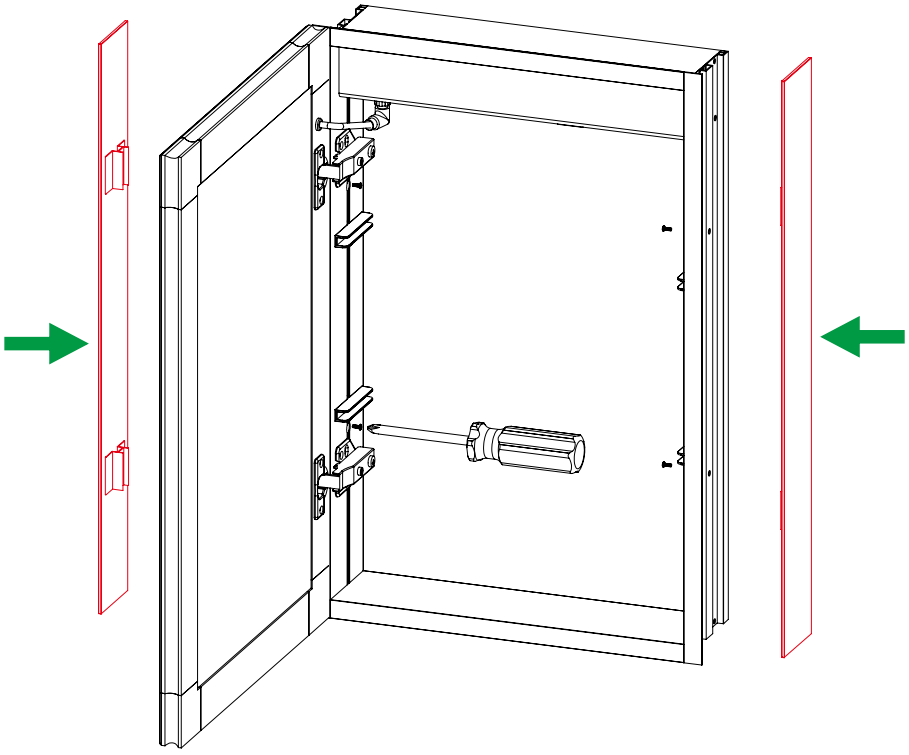

Step 6

Take out the tempered glass shelf(9) and align it with the brackets. Slide it carefully into the bracket slots.

Caution: Use both hands to apply even pressure on both ends of the shelf. Slide it in slowly and evenly to keep it level and prevent damage.

Loosen the screw on the clamp,slide it along the groove to adjust to your desired height,ensuring both clamps are at the same level.

(9)		Tempered Glass Shelf

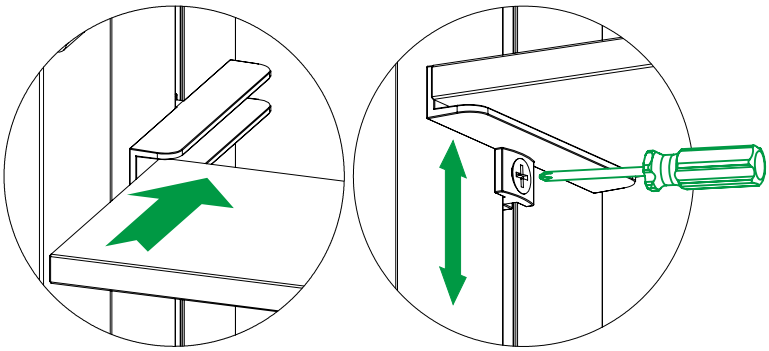

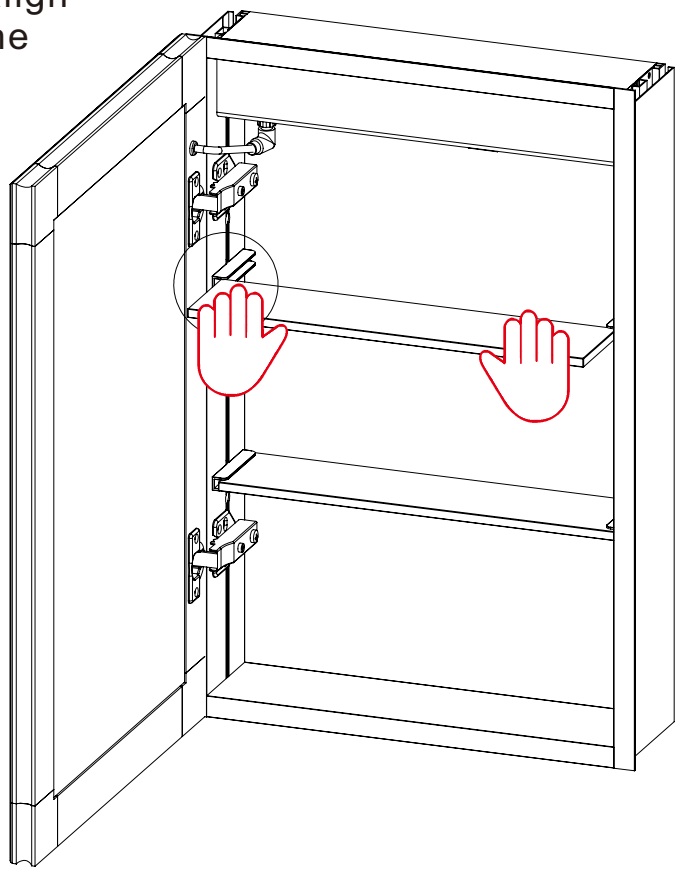

Step 7

Snap hinge cover(5) onto each hinge, ensuring they are fully secured.
Stick the door bumper(2) onto the inside of the cabinet door(s).

(5)	DTC	Hinge Cover
(2)		Door Bumper

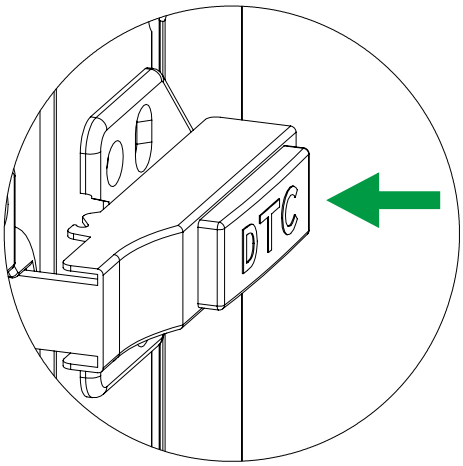

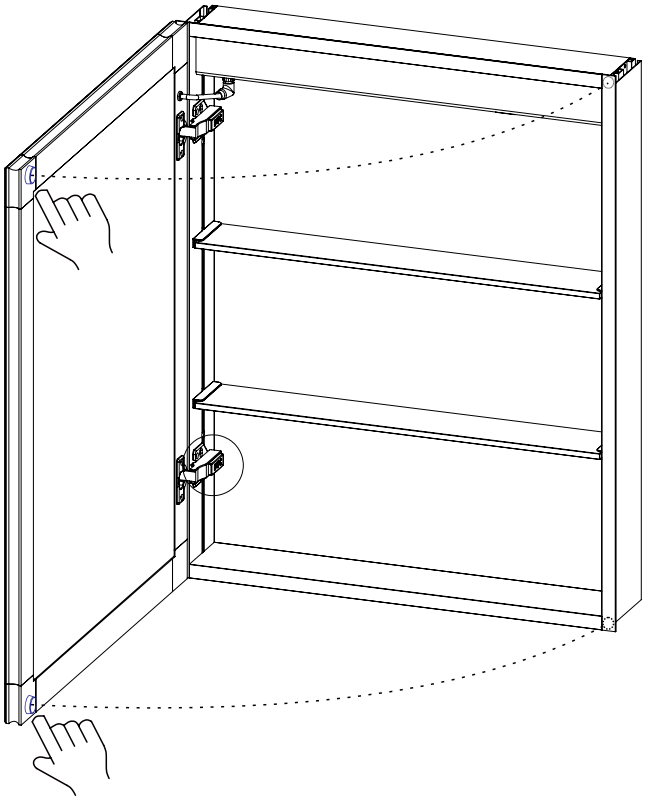

SURFACE MOUNT

Step 8

The cabinet is now ready for regular use.

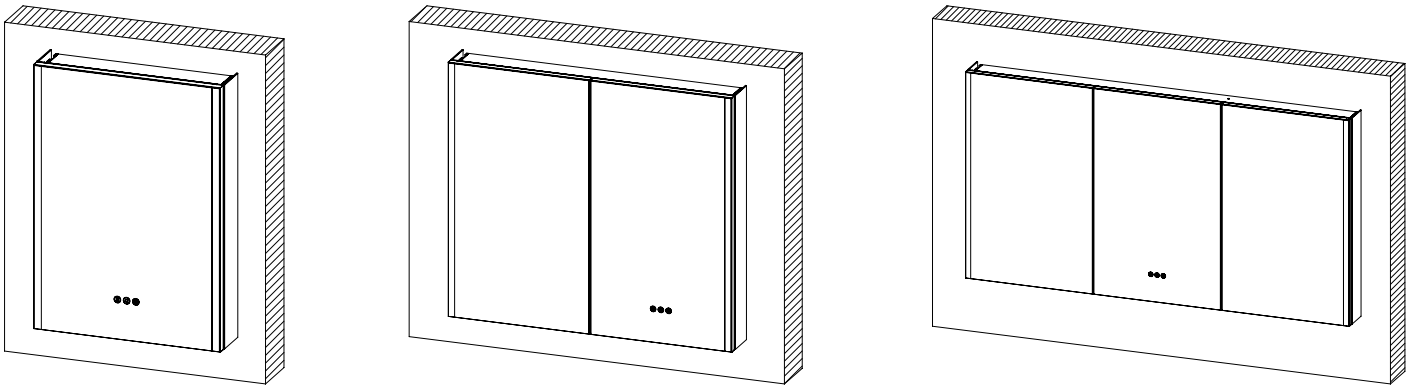

RECESSED MOUNT

Step 1

For recessed installation, cut an opening according to the dimensions shown in the diagram below.

Dimension / Size	W	H	D
16" x 24"	15 1/8"	23 3/16"	4 3/16"
20" x 28"	19 1/16"	27 3/16"	4 3/16"
24" x 30"	23 1/16"	29 3/16"	4 3/16"
24" x 36"	23 1/16"	35 3/16"	4 3/16"
36" x 32"	35 1/8"	31 3/16"	4 3/16"
48" x 32"	47 1/8"	31 3/16"	4 3/16"
54" x 32"	53 1/8"	31 3/16"	4 3/16"
60" x 32"	59 1/8"	31 3/16"	4 3/16"

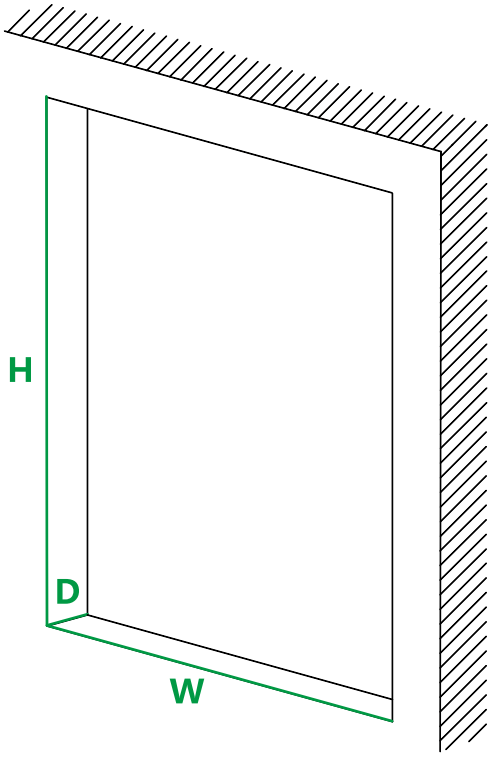

Step 2

Make sure power is turned off at the breaker before wiring. All electrical connections must comply with local codes and the National Electrical Code (NEC, NFPA 70).

Connect the cabinet wiring to your household power supply using the included wire connectors. Make sure all connections are properly secured and tucked inside the wall before mounting the cabinet.

(8)		Wiring Cap

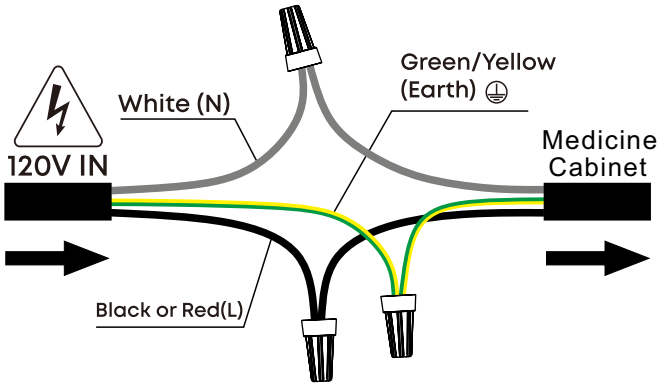

Refer to the diagram below on the left for the wiring method

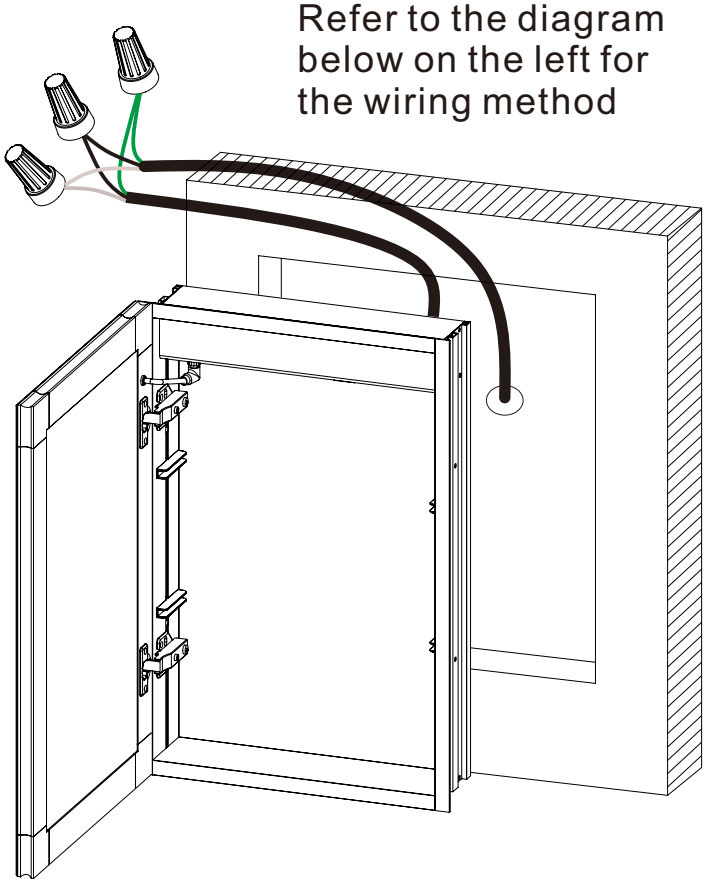

Step 3

Carefully place the cabinet into the prepared wall opening. Secure it using the long screws(3) through the side brackets.

(3)		Long Screw Ø5x55

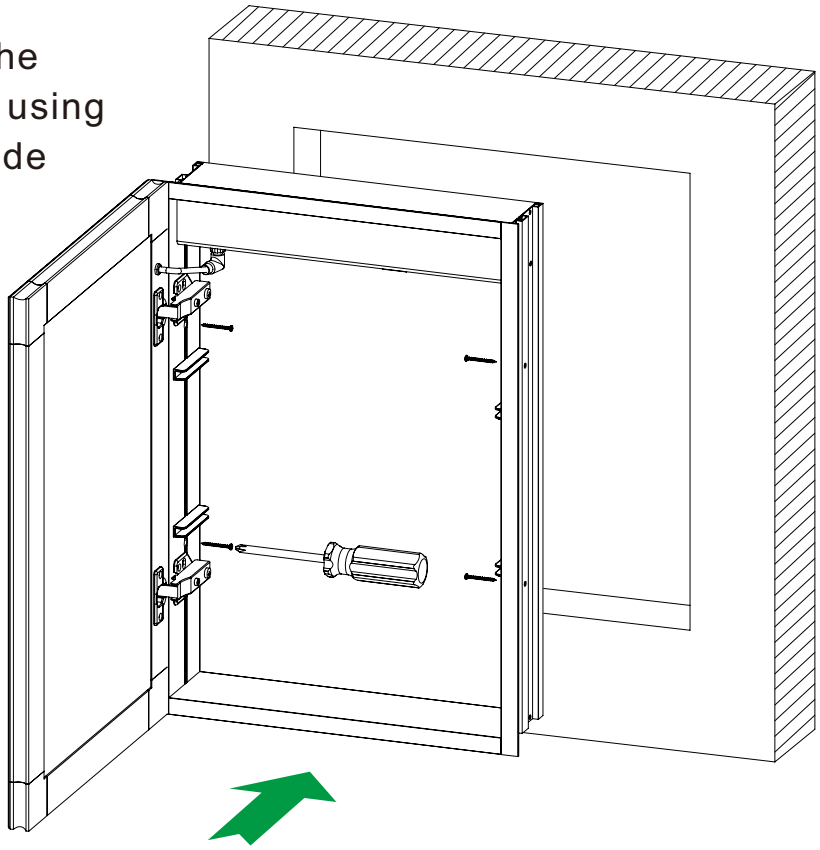

Step 4

Take out the tempered glass shelf(9) and align it with the brackets. Slide it carefully into the bracket slots.

Caution: Use both hands to apply even pressure on both ends of the shelf. Slide it in slowly and evenly to keep it level and prevent damage.

Loosen the screw on the clamp,slide it along the groove to adjust to your desired height,ensuring both clamps are at the same level.

(9)		Tempered Glass Shelf

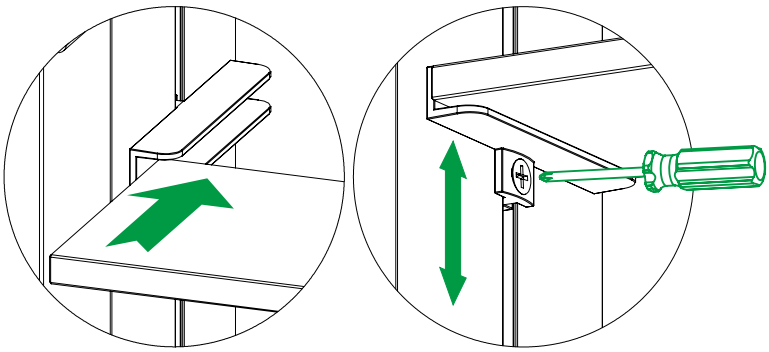

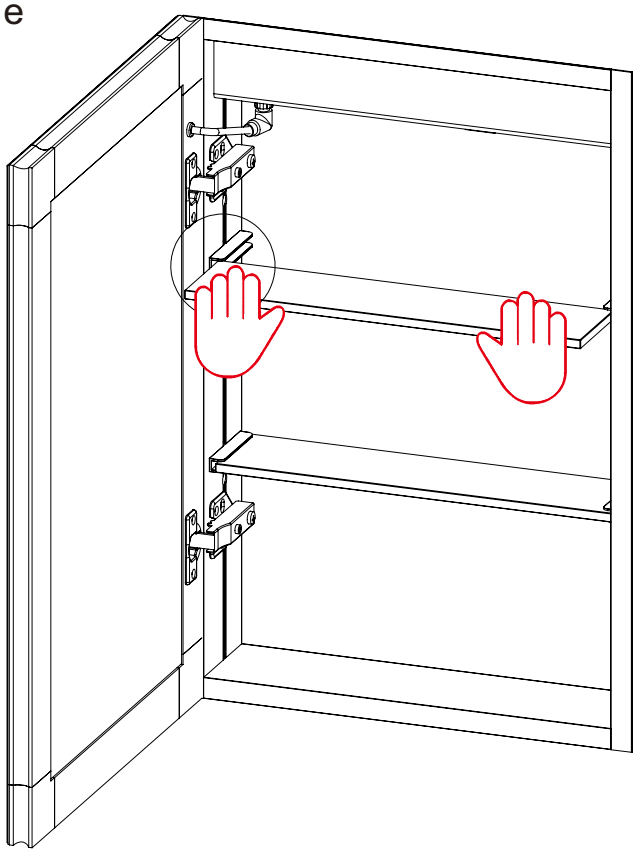

Step 5

Snap hinge cover(5) onto each hinge, ensuring they are fully secured.
Stick the door bumper(2) onto the inside of the cabinet door(s).

(5)	DTC	Hinge Cover
(2)		Door Bumper

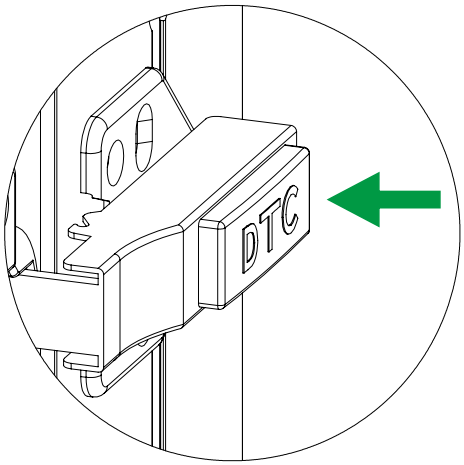

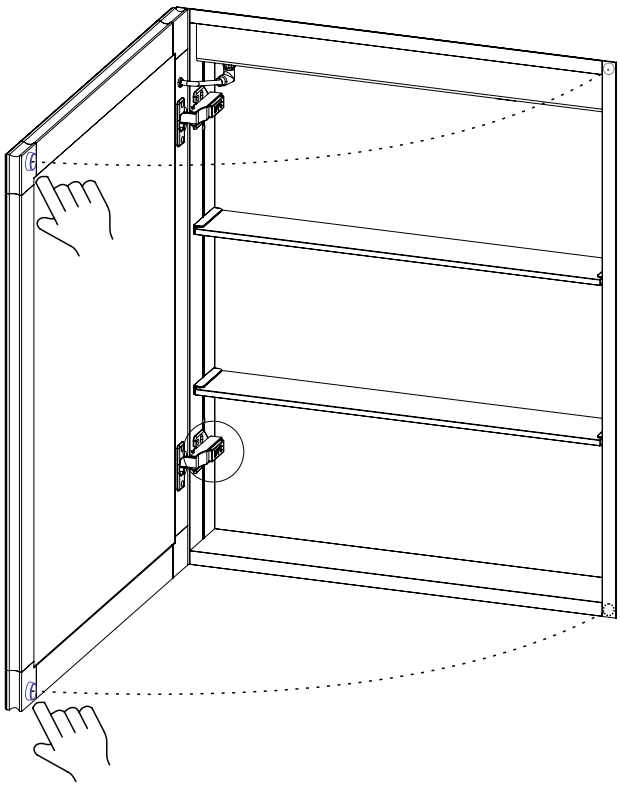

RECESSED MOUNT

Step 6

The cabinet is now ready for regular use.

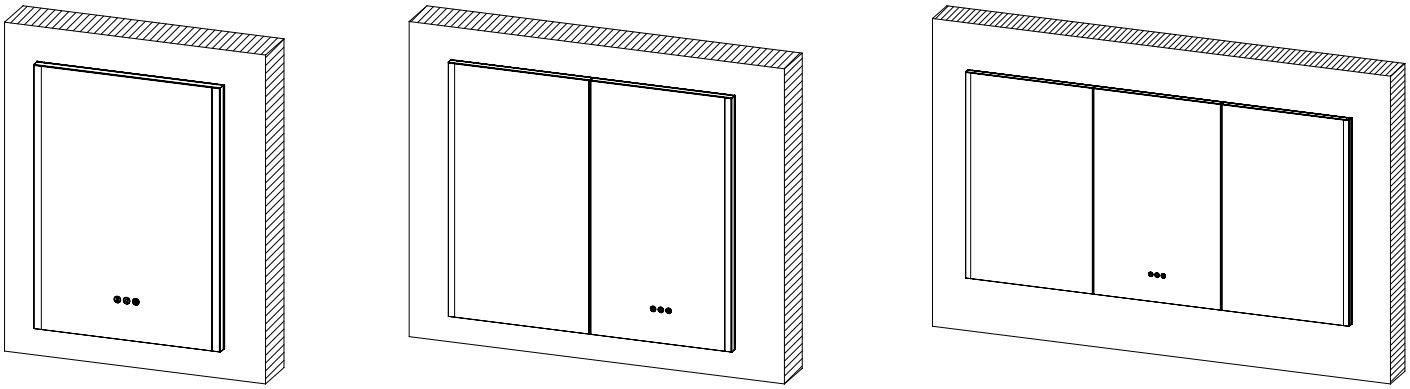

HOW TO ADJUST THE HEIGHT OF TEMPERED GLASS SHELF

Loosen the screw on each clamp, slide them along the groove to adjust the shelf to your desired height. Ensure that both clamps are aligned at the same level before retightening.

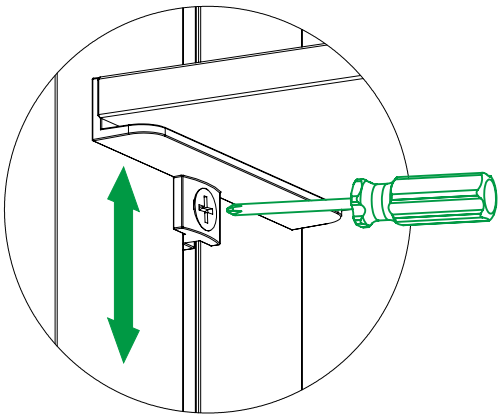

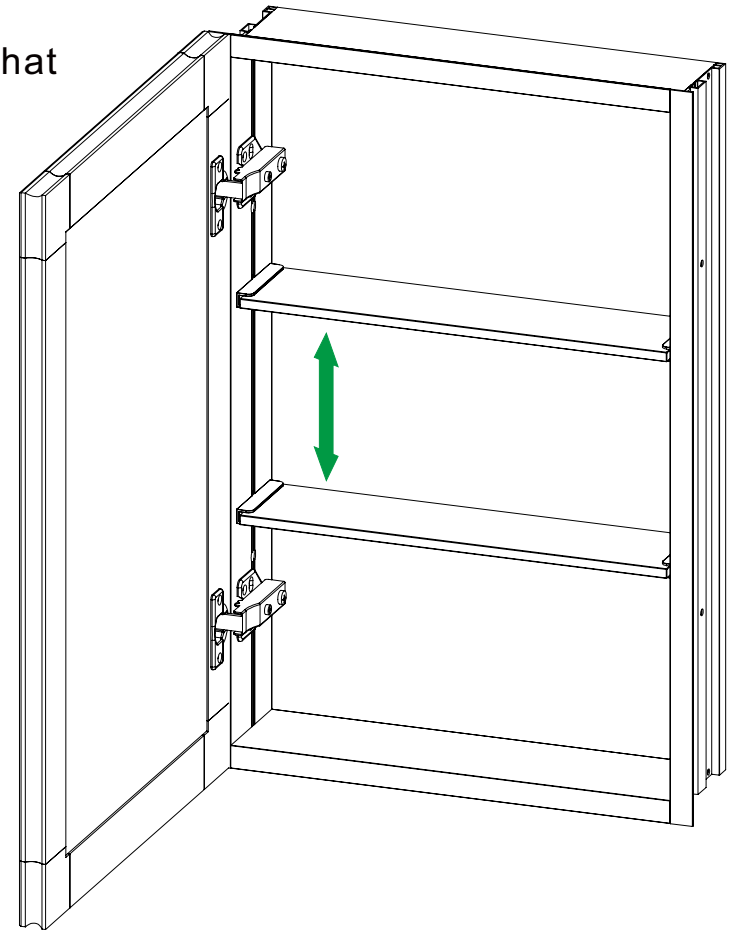

HOW TO ADJUST HYDRAULIC HINGES

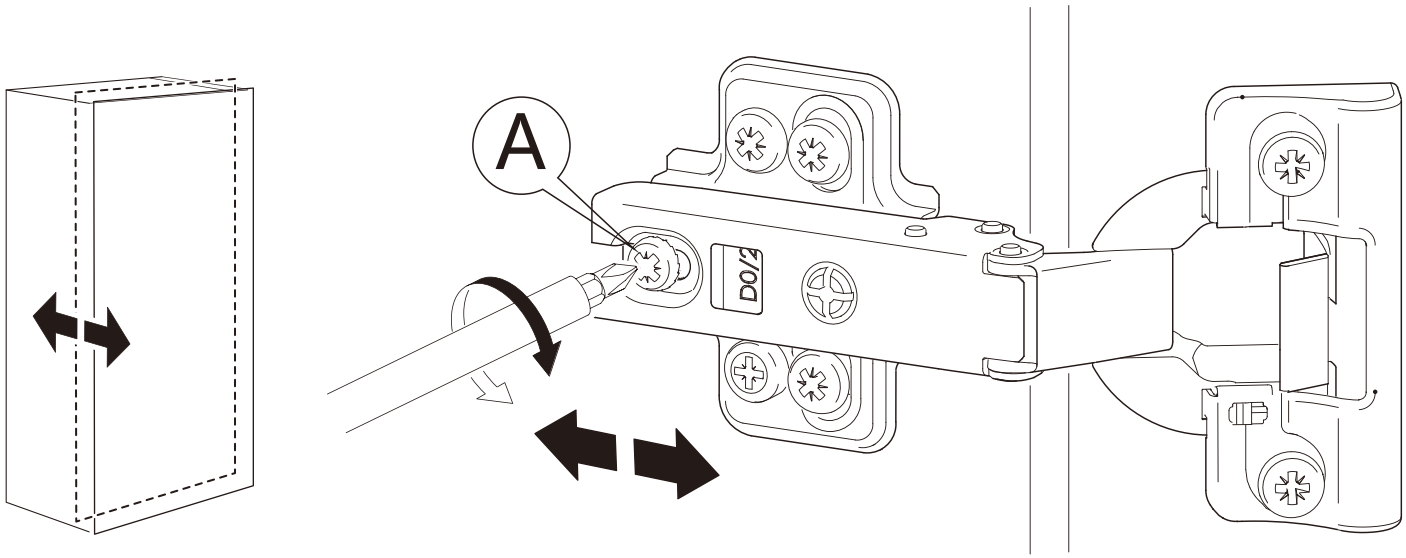

A:Adjusts the door depth

Rotate screw A clockwise or counterclockwise to adjust the door depth and modify the gap between the door and the cabinet frame.

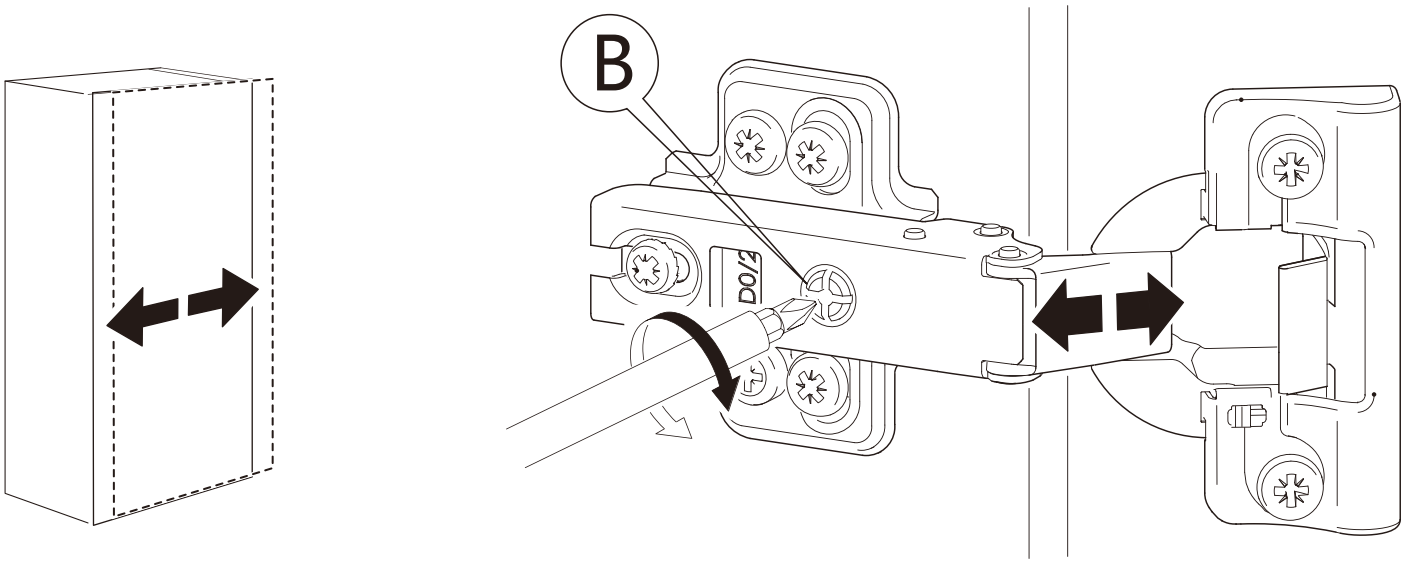

B:Adjusts the door side-to-side alignment

Rotate screw B clockwise or counterclockwise to move the door left or right for proper side-to-side alignment.

OPERATION INSTRUCTION

Lighting Button

• Single Tap: Turns the LED light on or off
• Press and Hold: Adjusts brightness continuously
• Release and Press Again: Reverses the dimming direction

Anti-Fog Button

• Single Tap: Activates or deactivates the anti-fog feature
• Auto Shut-off: Turns off automatically after 60 minutes
• Press and hold to switch off the button backlight

Color Temperature (CCT) Button

• Single Tap: Switches between 2700K(warm), 4000K(neutral), and 6500K(cool)

◆ Touch Button Light Indicator
- White Color: Standby Mode
- Yellow Color: Working Mode
- Lights Off: Off

AFTER-SALES SERVICE CARD

Thank you sincerely for choosing our product — we truly appreciate your trust. We hope it brings both beauty and functionality to your home. Each item is carefully inspected and thoughtfully packaged to ensure the highest quality. If you experience any issues with shipping or the product itself, please don't hesitate to reach out. We're always here and happy to assist you in any way we can.

Warranty Information

The medicine cabinet is covered by a 1-year limited warranty from the date of purchase,protecting against manufacturing defects and hardware malfunctions under normal residential use.

For assistance or service, please contact us

We are here to assist and typically respond within 24 hours.