INSTALLATION
Product Manual

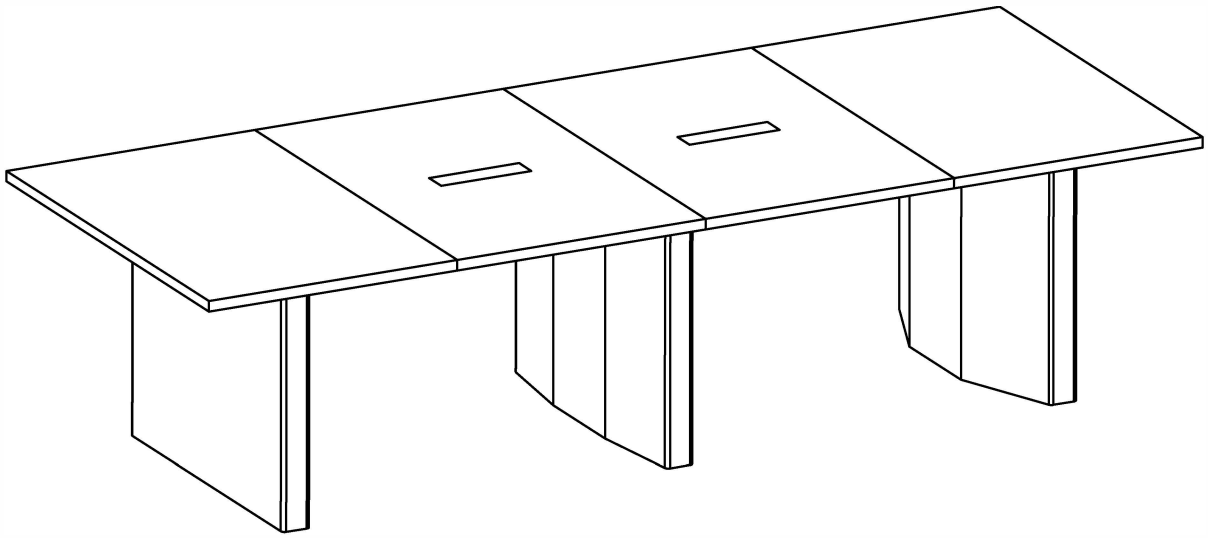

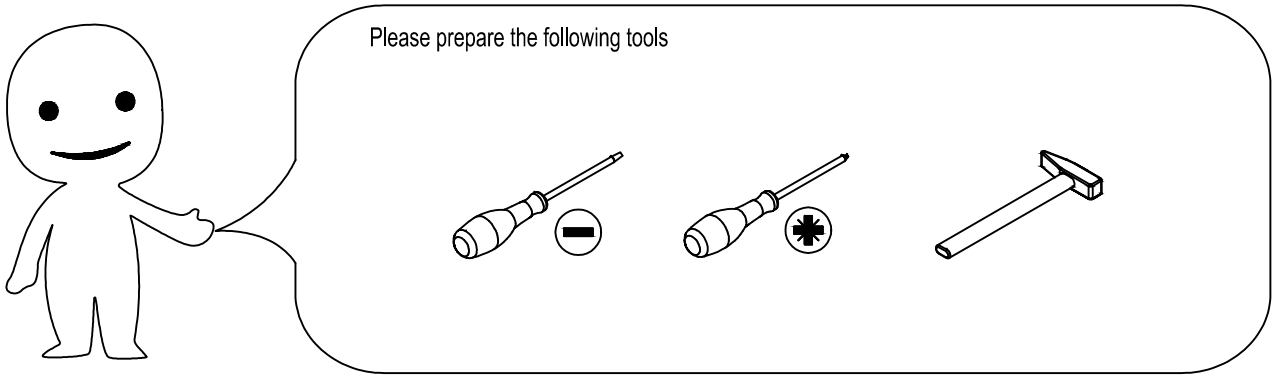

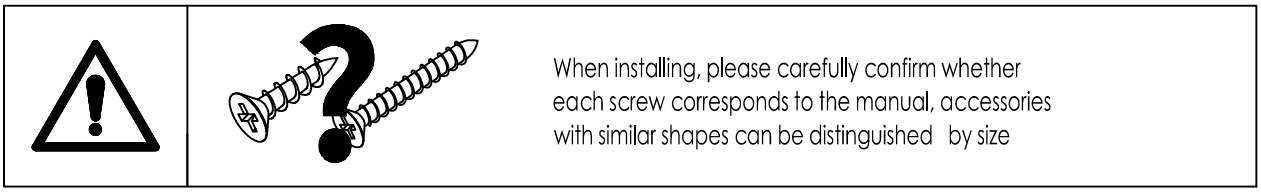

A×76	B×16	C×9	D×6
 M4×20	 M6×12		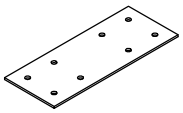

E×1	F×2Sets
	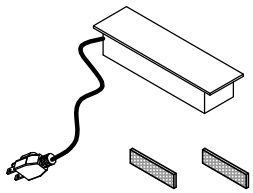 Sponge Block

Note:

Bolt installation should be carried out in two steps: initial tightening and final tightening. One-time locking is strictly prohibited. Final tightening must be performed after the overall structure is corrected and all bolts are in place.

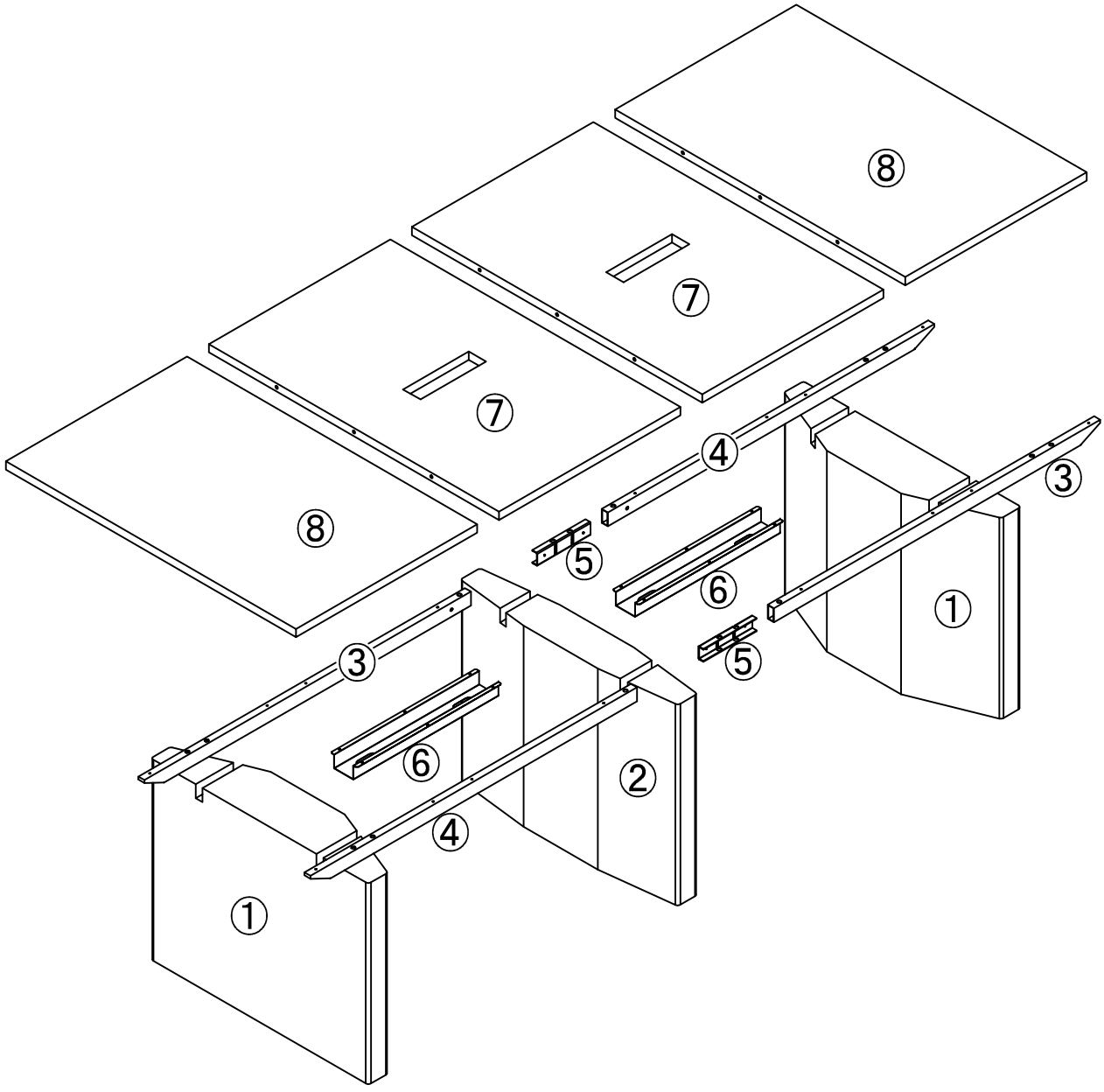
⑧
⑦
⑦
⑧
④
③
⑤
⑥
①
③
⑤
⑥
②
④
①

1

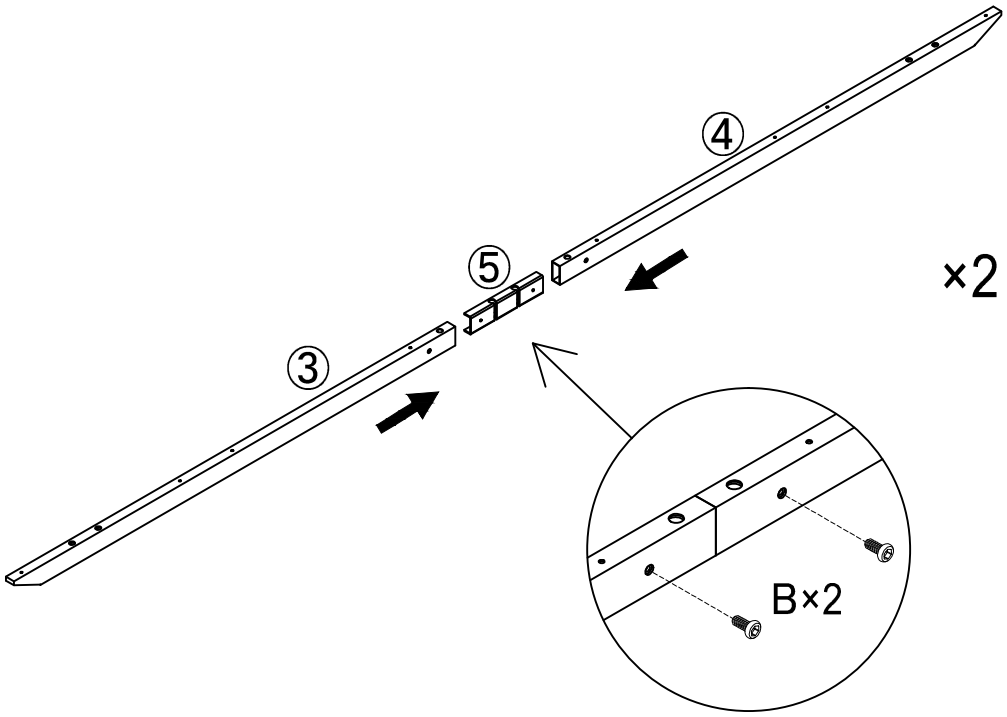

B×4

2

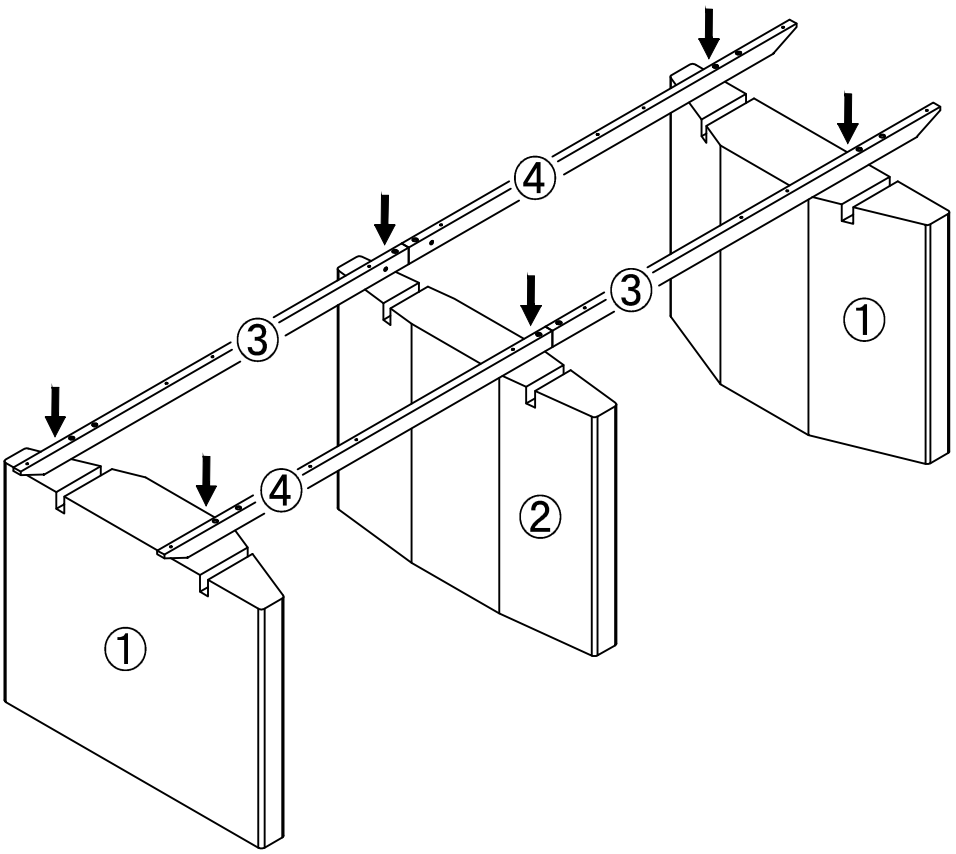

3

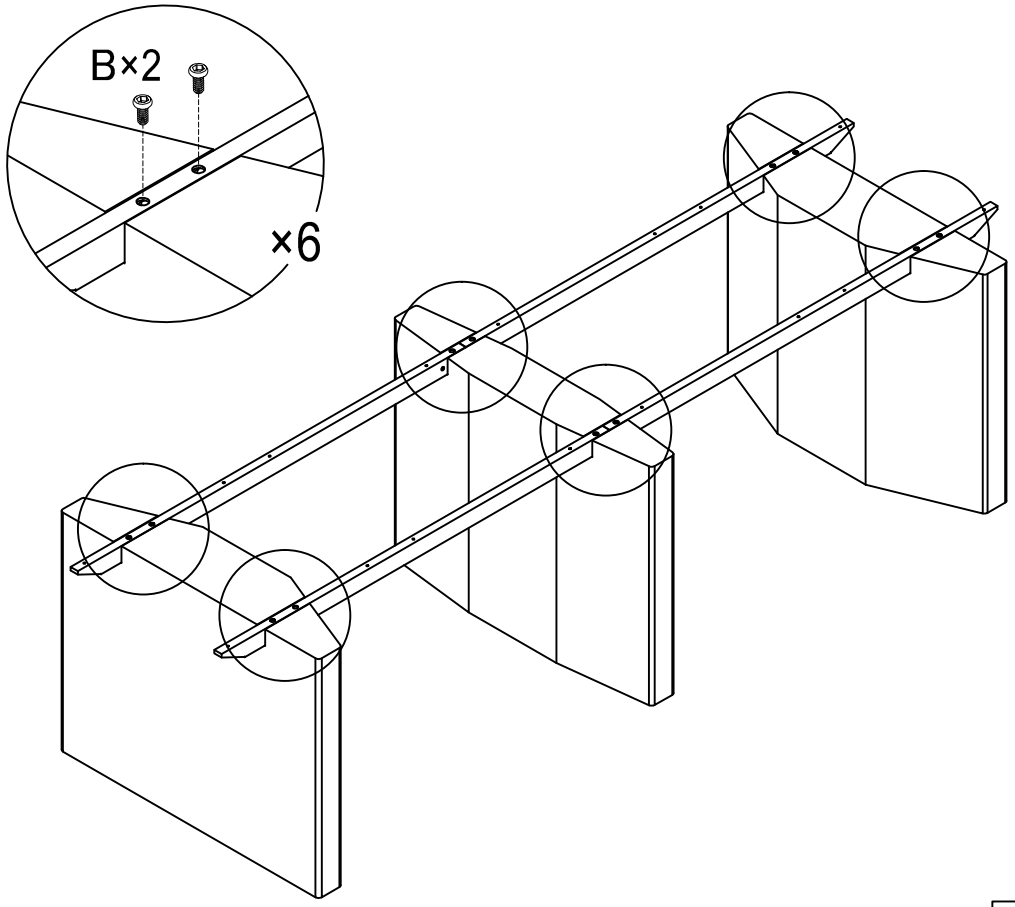

B×12

4

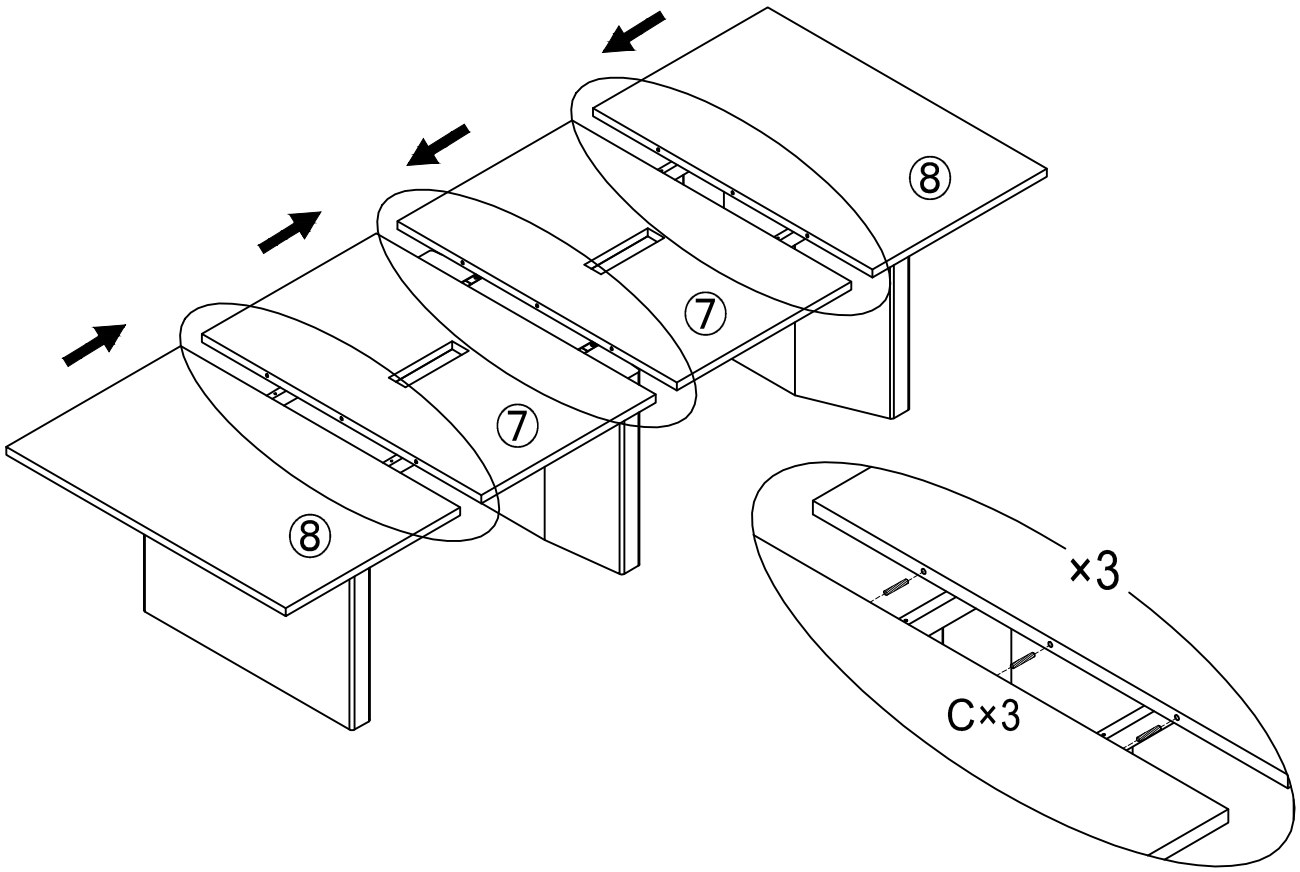

C×9

5

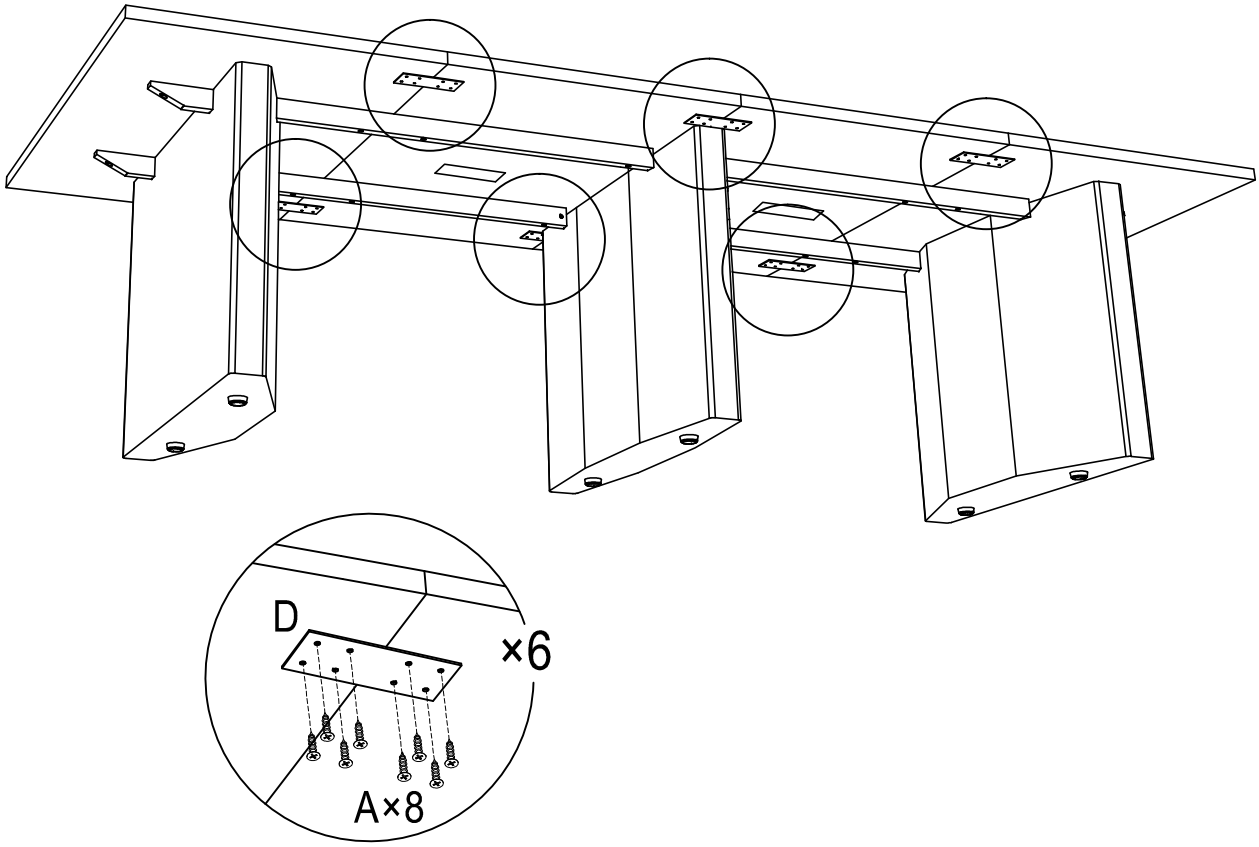

A×48	D×6

6

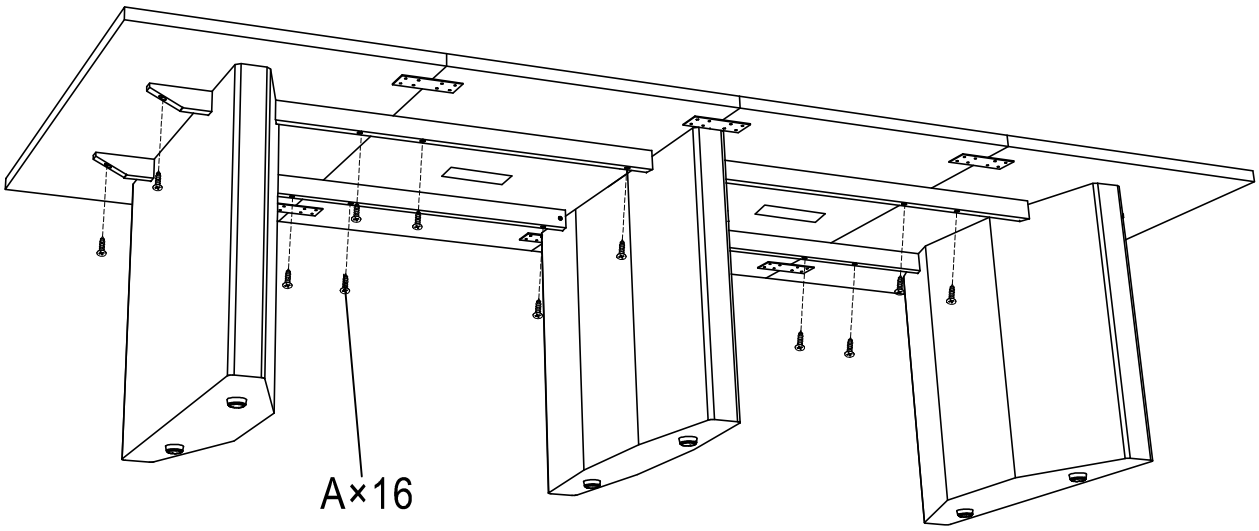

A×16

7

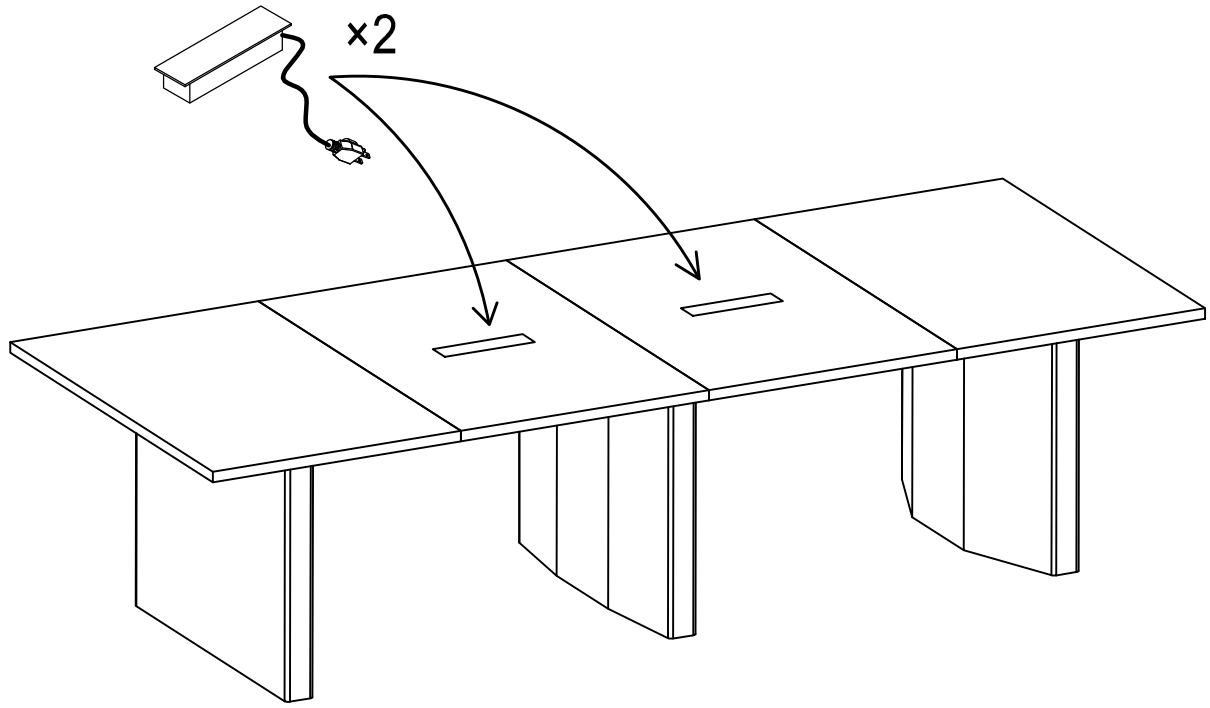

F×2

8

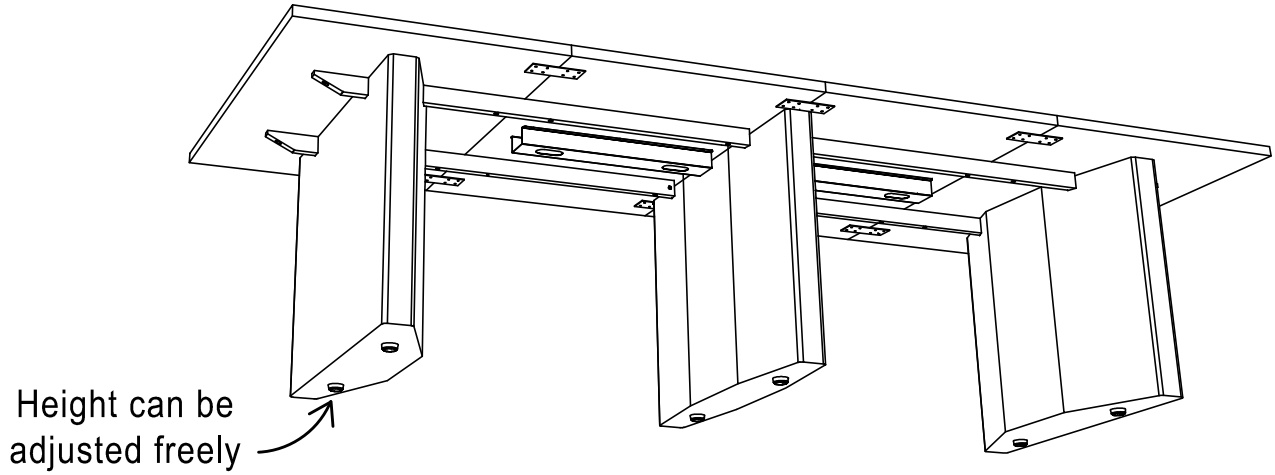

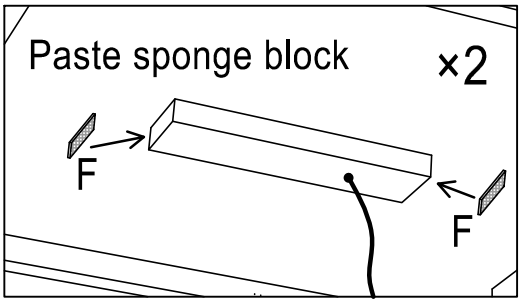

Step 1

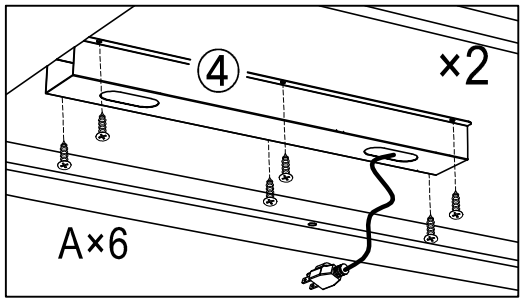

Step 2

F×4 A×12